CONTRACT NO. 72829

F.A.P. RTE.	SECTION	COUNTY	TOTAL SHEETS	SHEET NO.
75	84-12; 11-3	*	729	448
STA. N/A		TO STA. N/A		
FED. ROAD DIST. NO. 5	ILLINOIS	FED. AID PROJECT		

* SANGAMON AND CHRISTIAN

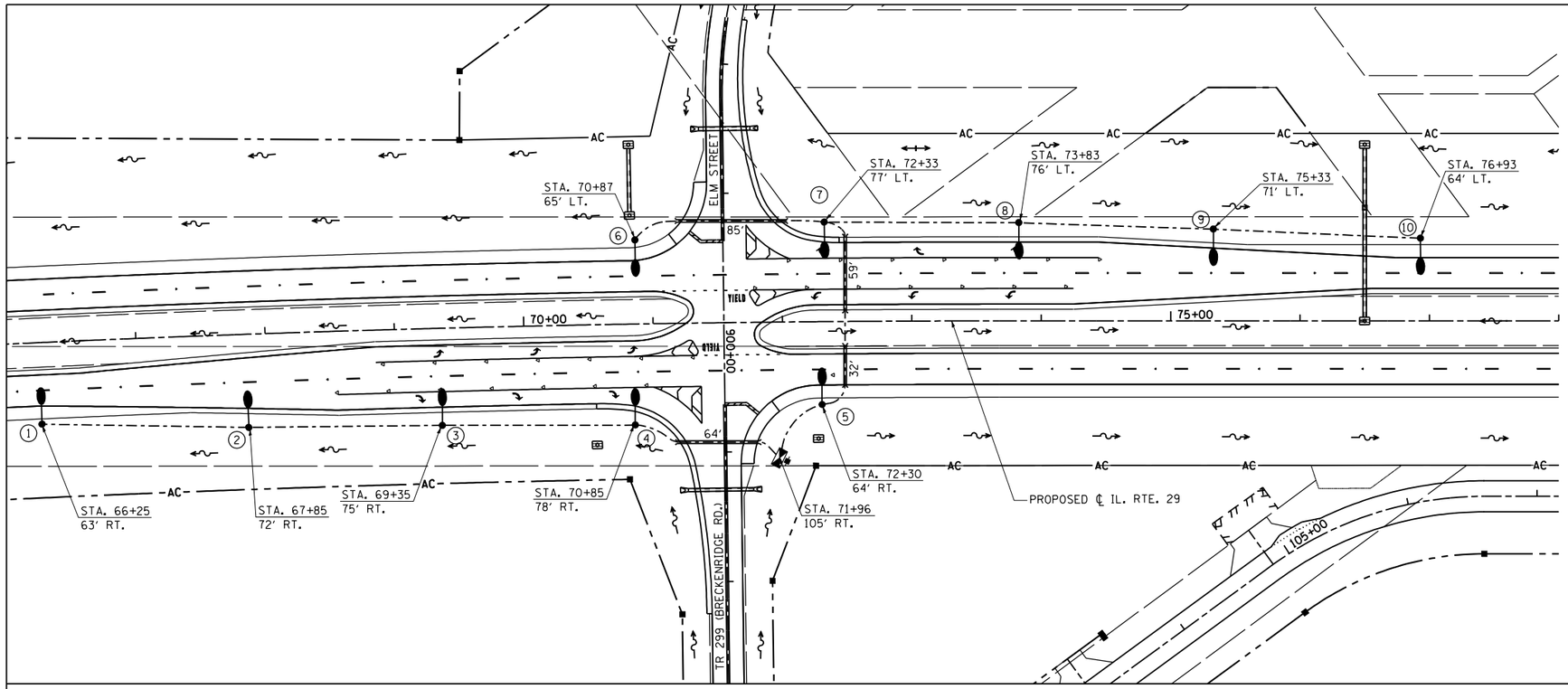

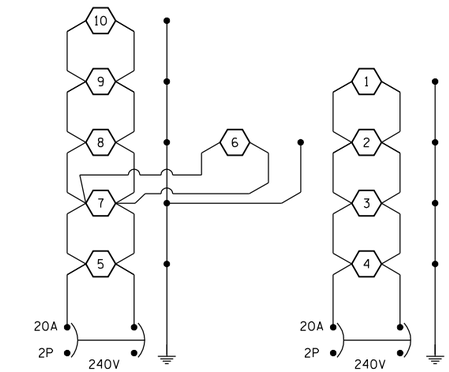

LEGEND

- LIGHT POLE, ALUMINUM, 45 FT. M.H., 15 FT. DAVIT ARM WITH LUMINARE, SODIUM VAPOR, HORIZONTAL MOUNT. 250 WATT, WITH BREAKAWAY COUPLINGS.
- ELECTRIC SERVICE INSTALLATION, 120/240V, 1 PHASE, 4 WIRE
- LIGHTING CONTROLLER, POLE MOUNTED, 240V, 60A
- UNIT DUCT, 600V, 2-1C NO. 8, 1/C NO. 8 GROUND (XLP TYPE USE), 3/4″ DIA. POLYETHYLENE
- UNDERGROUND CONDUIT, COILABLE NONMETALLIC CONDUIT, 2 1/2″ DIA. (SCHEDULE 80), UNLESS NOTED OTHERWISE

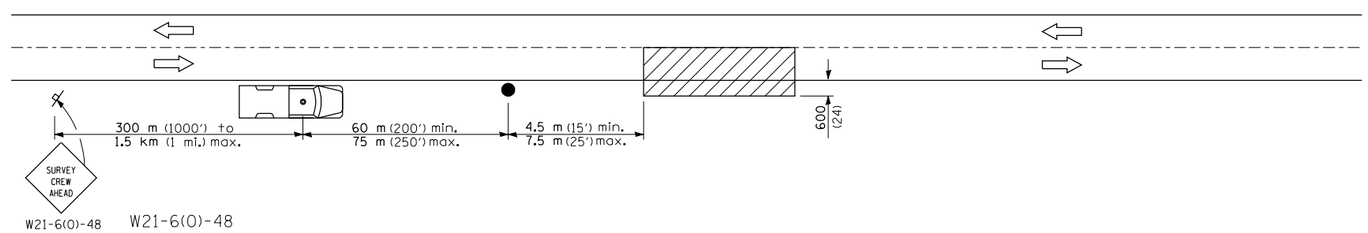

SYMBOLS

- Work area
- Sign on portable or permanent support
- Truck with flashing amber light and dual emergency flashers
- Flagger with traffic control sign

TYPICAL APPLICATIONS

Utility operations

All dimensions are in millimeters (inches) unless otherwise shown.

DETAIL FOR NIGHTTIME LIGHTING INSPECTION

REVISIONS	
NAME	DATE

ILLINOIS DEPARTMENT OF TRANSPORTATION

LIGHTING PLAN AND DETAILS
ILLINOIS RTE. 29 & TR 299

SCALE: 1″ = 50′ DRAWN BY: IDOT
DATE: 03/06/2012 CHECKED BY: J.M.M.

Default
L:\IDOT\030660\drawings\sheets\0672829-sht-LIGHT_PR_005.dgn
5/10/2012