CONTRACT NO. 64820

F.A.P. RTE.	SECTION	COUNTY	TOTAL SHEETS	SHEET NO.
742	40-M	WINNEBAGO	165	106
STA.		TO STA.		
FED. ROAD DIST. NO.	ILLINOIS	FED. AID PROJECT		

NOSE TYPE FOR INLET TOP SLAB

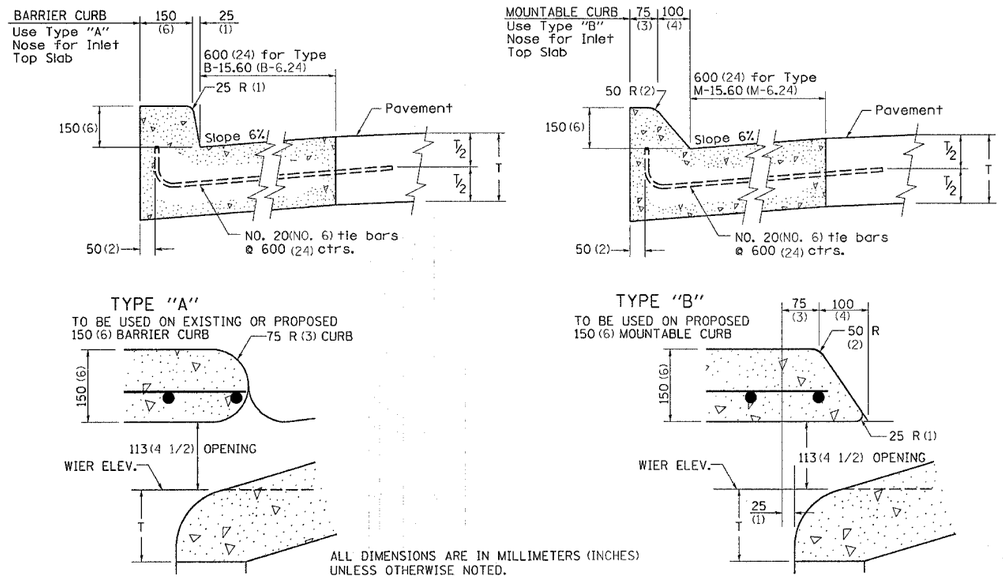

ALL DIMENSIONS ARE IN MILLIMETERS (INCHES) UNLESS OTHERWISE NOTED.

NOSE TYPE FOR INLET TOP SLAB 79.4d

REVISED 2-14-95

INLET SPECIAL NO. 3, 4, 5, 6 REINFORCEMENT DETAIL

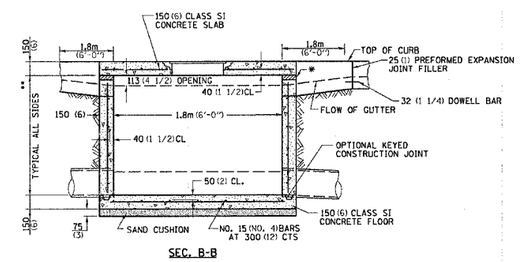

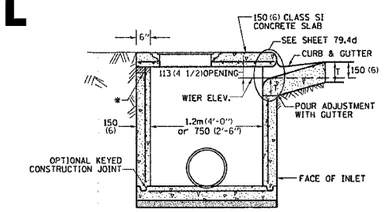

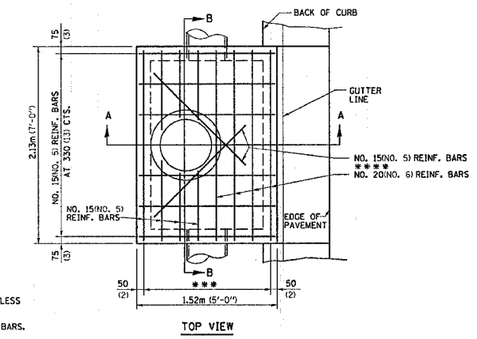

* THE WALL ADJUSTMENTS SHALL BE MADE WITH CONCRETE BUILDING BRICK OR CLASS SI CONCRETE.

THE HEIGHT OF THE BOX MAY BE CONSTRUCTED 150 (6) SHORT TO ALLOW FOR FIELD ADJUSTMENTS.

** 1.2m (4'-0") TO 2.4m (8'-0") - NO. 15 (NO. 5) REINF. BARS AT 300 (12) CTS. E.W.
2.4m (8'-0") TO 4.0m (13'-0") - NO. 15 (NO. 5) REINF. BARS AT 250 (10) CTS. E.W.
4.0m (13'-0") TO 4.6m (15'-0") - NO. 15 (NO. 5) REINF. BARS AT 200 (8) CTS. E.W.

*** 7 SPA. AT 200 mm (8") INLET SPECIAL # 3, 4
5 SPA AT 206 mm (7 5/8") INLET SPECIAL # 5, 6

**** 2 REBARS FOR INLET SPECIAL 3 & 4
4 REBARS FOR INLET SPECIAL 5 & 6

NOTES

ALL DIMENSIONS ARE IN MILLIMETERS (INCHES) UNLESS OTHERWISE NOTED.

TOP SLAB REINFORCEMENT TO BE EPOXY COATED BARS.

INLET SPECIAL NO. 3, 4, 5, 6 REINFORCEMENT DETAIL 79.4e

REVISED 4-4-05

DRAIN FOR AGGREGATE BASES IN URBAN AREAS

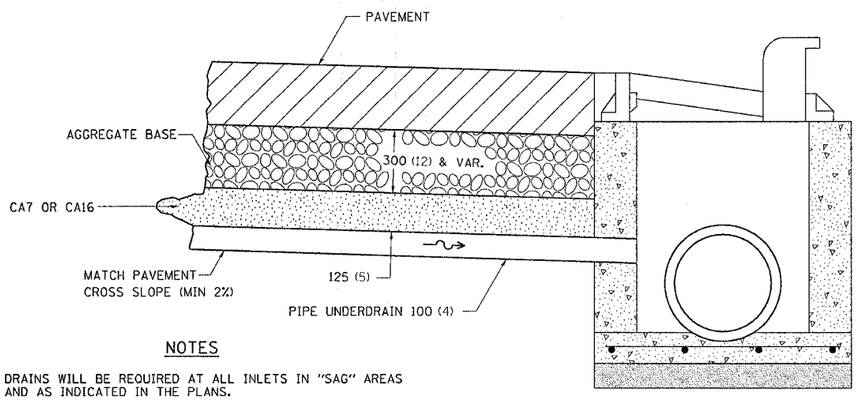

NOTES

DRAINS WILL BE REQUIRED AT ALL INLETS IN "SAG" AREAS AND AS INDICATED IN THE PLANS.

THIS WORK SHALL BE COMPLETED ACCORDING TO SECTION 601 OF THE STANDARD SPECIFICATIONS.

THIS WORK WILL BE PAID FOR AT THE CONTRACT UNIT PRICE PER METER (FOOT) FOR PIPE UNDERDRAINS OF THE DIAMETER SPECIFIED WHICH PRICE SHALL INCLUDE THE CA7 OR CA16 AND THE CONNECTION TO THE INLET.

ALL DIMENSIONS ARE IN MILLIMETERS (INCHES) UNLESS OTHERWISE NOTED.

DRAIN FOR AGGREGATE BASES IN URBAN AREAS 88.4

REVISED 4-7-99

TREE REPLACEMENT SCHEDULE

CODE NUMBER	SCIENTIFIC NAME	COMMON NAME	SIZE	UNIT	QUANTITY
A2001814	TREE, ACER SACCHARUM	SUGAR MAPLE	1¾" CALIPER, BALLED & BURLAPPED	EACH	5
A2006714	TREE, QUERCUS MACROCARPA	BUR OAK	1¾" CALIPER, BALLED & BURLAPPED	EACH	5
A2007814	TREE, TILIA AMERICANA	AMERICAN LINDEN/BASSWOOD	1¾" CALIPER, BALLED & BURLAPPED	EACH	5
B2000116	TREE, ACER CAMPESTRE	HEDGE MAPLE	2" CALIPER, TREE FORM, BALLED & BURLAPPED	EACH	5
*2001381	TREE, MAGNOLIA LILIIFLORA	JANE MAGNOLIA	1¾" CALIPER, BALLED & BURLAPPED	EACH	5
B2002716	TREE, MALUS ADIRONDACK	ADIRONDACK CRABAPPLE	2" CALIPER, TREE FORM, BALLED & BURLAPPED	EACH	5
B2004814	TREE, MALUS SARGENTII	SARGENTS CRABAPPLE	1¾" CALIPER, BALLED & BURLAPPED	EACH	5
C2001736	SHRUB, CORNUS SERICEA CARDINAL	CARDINAL REDOSIER DOGWOOD	3' HEIGHT, BALLED & BURLAPPED	EACH	25
C2012836	SHRUB, VIBURNUM TRILOBUM	AMERICAN CRANBERRY VIBURNUM	3' HEIGHT, BALLED & BURLAPPED	EACH	30

LAYOUT SHALL BE PERFORMED BY THE DISTRICT LANDSCAPE ARCHITECT
MULCH SHALL BE HARDWOOD CHIPS, 5 FOOT WIDTH, 4 INCHES THICK WITH WEED BARRIER
ALTERNATE PLANTING SITE: US BYPASS 20/IL2 INTERCHANGE

ALL DIMENSIONS ARE IN MILLIMETERS (INCHES) UNLESS OTHERWISE NOTED.

TREE REPLACEMENT SCHEDULE 90.4

REVISED 8-10-05

PLOT DATE = Mon Apr 03 11:12:53 2006
FILE NAME = C:\Projects\b2050202\d25202spl.dgn
PLOT SCALE = 50.000 ft / IN.
REFERENCE = $$$$$$