STATE OF ILLINOIS
DEPARTMENT OF TRANSPORTATION

ROUTE NO.	SECTION	COUNTY	TOTAL SHEETS	SHEET NO.
F.A.P. 315	55-2	MCDONOUGH	1025	468
FED. ROAD DIST. NO. 4	ILLINOIS	FED. AID PROJECT-		

SHEET NO. 12
22 SHEETS

Contract No. 68205

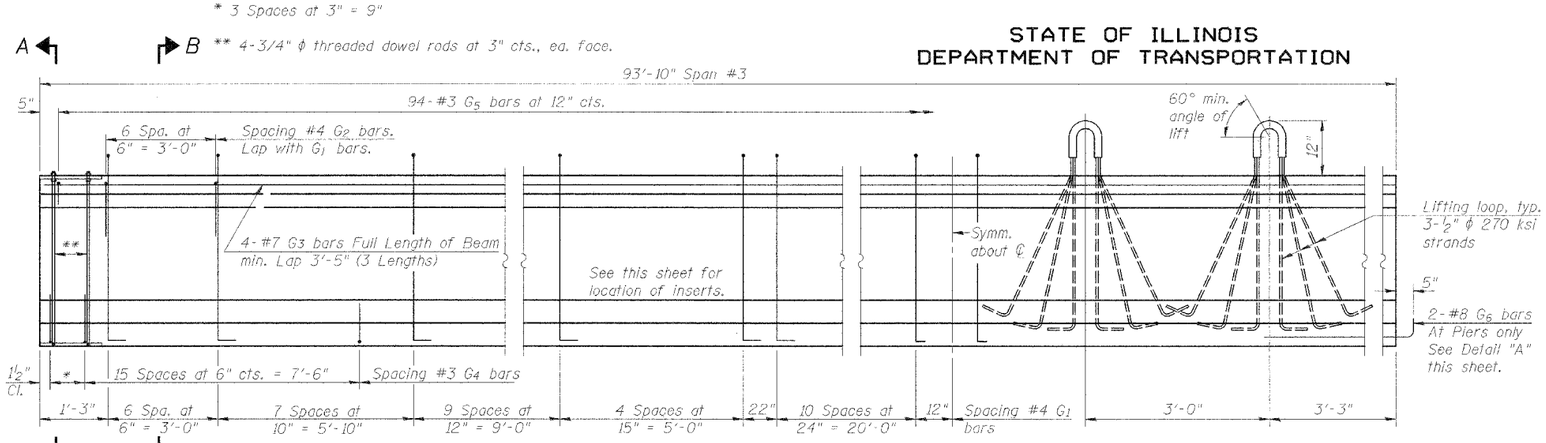

ELEVATION OF BEAM
(Showing Reinforcement & Dimensions)

Note A:
1. Hex nuts (top and bottom) with lock washers (top). Only tighten sufficiently to compress lock washers.

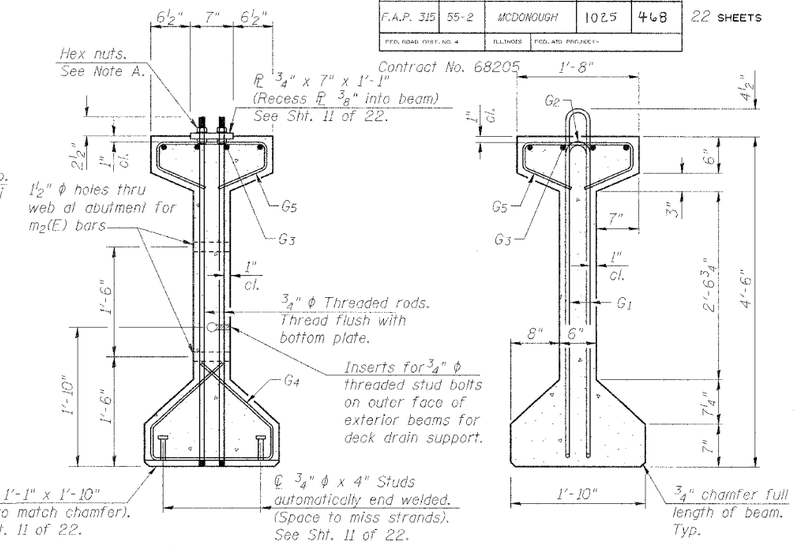

SECTION A-A

SECTION B-B

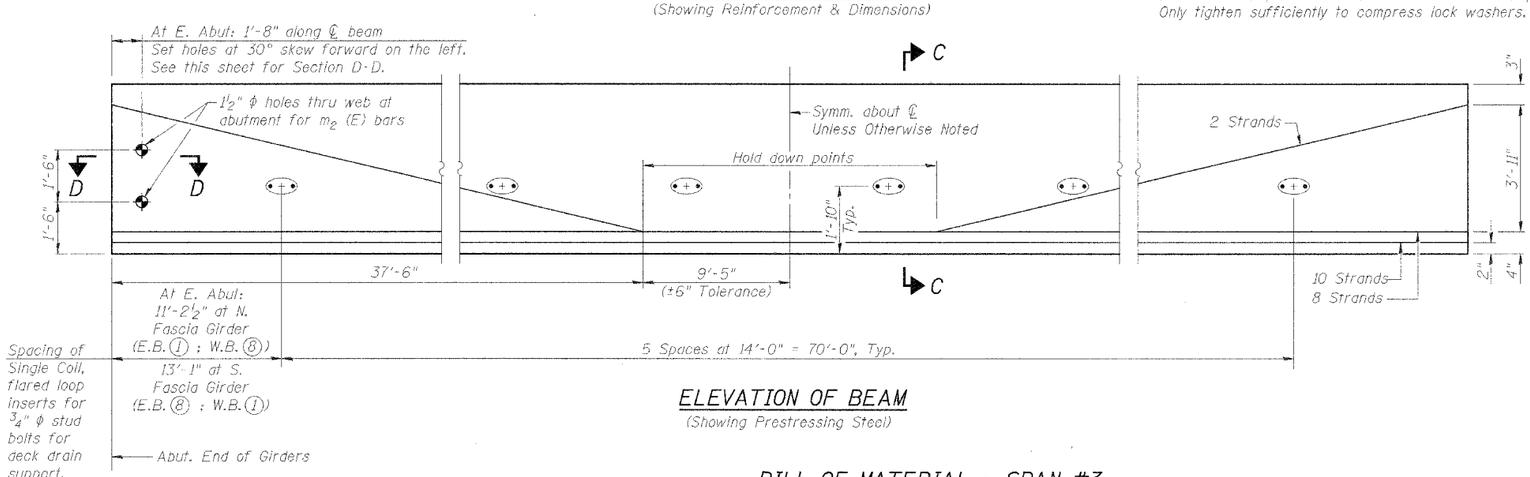

ELEVATION OF BEAM
(Showing Prestressing Steel)

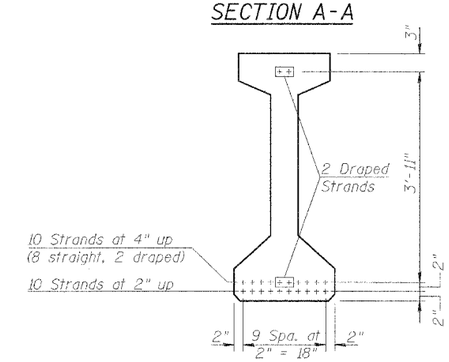

SECTION C-C
Space 20 Strands Symm. about ℄

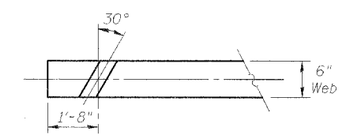

SECTION D-D

BILL OF MATERIAL - SPAN #3
Two Bridges

Item	Unit	Total
Furnishing and Erecting Precast Prestressed Concrete I-Beams, 54"	Ft.	1,501

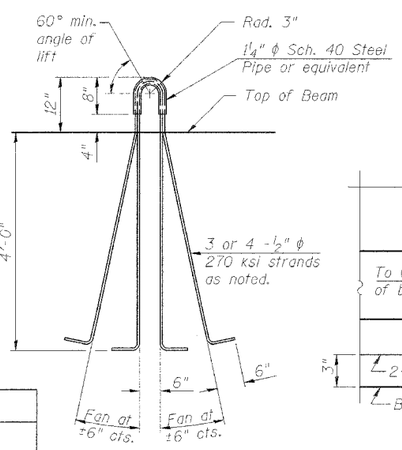

LIFTING LOOP DETAIL

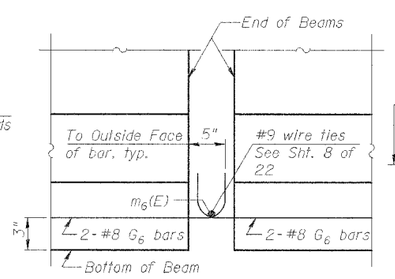

ELEVATION

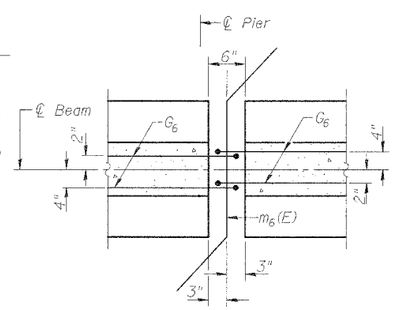

PLAN

DETAIL "A"
At Piers

P.P.C. I-BEAM NOTES (ALL SPANS)

1.) Inserts for 3/4" ϕ threaded dowel rods, when specified, are to be two strut, coil type for interior beams and single coil, flared loop type for exterior beams.
2.) Prestressing steel shall be uncoated high strength, low relaxation 7-wire strand, Grade 270.
3.) The nominal diameter shall be 1/2" and the nominal cross-sectional area shall be 0.153 sq. in.
4.) Non-prestressing steel shall conform to AASHTO designation M-31 or M-322, Grade 60.
5.) A minimum 2-1/2" ϕ lifting pin shall be used to engage the lifting loops during handling.
7.) Cut G6 bars when necessary to maintain 1/2" clearance.
8.) The bottom plates and studs shall be galvanized according to AASHTO M111 and ASTM A385.
9.) Threaded rods shall be ASTM F 1554 Grade 55.
10.) The cut strands at each beam end shall be given two coats of zinc dust spray or paint meeting the requirements of ASTM A 780. The zinc dust spray or paint shall be applied before corrosion appears and allowed to dry according to the manufacturer's specifications prior to another coat of zinc. A concrete sealer meeting the requirements of Section 587 of the Standard Specifications shall be applied to all portions of the I-beam, except the top surface of the top flange and the bottom surface of the bottom flange, starting at each beam end and extending out a distance of 54 inches. The sealer shall be applied after visible crack growth has subsided. This work shall be performed by the producer and included with the cost of the beam.
11.) Reinforcement bars designated (E) shall be epoxy coated.

CROSS REFERENCE NOTES

1.) See Sht. 10 of 22 for Framing Plan.
2.) See Sht. 11 of 22 for Moment and Reaction Tables.
2.) See Sht. 10 of 22 for Bar Bends
5.) See Sht. 11 of 22 for Top & Bottom End Plate Details.

BAR LIST, ONE BEAM ONLY

Bar	No.	Size	Length	Shape
G1	76	#4	10'-5"	
G2	14	#4	5'-4"	
G3	12	#7	33'-6"	
G4	38	#3	4'-11"	
G5	94	#3	3'-5"	
G6	2	#8	3'-9"	

SPAN #3 GIRDER DETAILS
IL. ROUTE 336 OVER
BURLINGTON NORTHERN
SANTA FE RAILROAD
F.A.P. ROUTE 315 SECT. 55-2
McDONOUGH COUNTY
STATION 154+56.74
STRUCTURE NO. 055-0052 (EB)
STRUCTURE NO. 055-0053 (WB)

DESIGNED	PJL
CHECKED	LLV
DRAWN	MGM
CHECKED	PJL

STS CONSULTANTS
111 NE Jefferson Ave.
Peoria, Illinois 61602
Ph(309)676-8464
FAX(309)676-5445
IL Design Firm Reg. No. 184-001518

S:\12\055-0052-00\055-0052-00.dgn 9/26/2006 8:18:24 AM