| ROUTE NO. | SECTION | COUNTY | TOTAL SHEETS | SHEET NO. |
|---|---|---|---|---|
| F.A.P. 315 | 55-2 | McDONOUGH | 1025 | 529 |
| FED. ROAD DIST. NO. 4 | ILLINOIS | FED. AID PROJECT- | | |

SHEET NO. 13
19 SHEETS

Contract # 68205

# STATE OF ILLINOIS
# DEPARTMENT OF TRANSPORTATION

Notes:

1. Space reinforcement in cap to miss anchor bolts.
2. All edges shall have standard $\frac{3}{4}$" chamfers except as noted.
3. Reinforcement bars designated (E) shall be epoxy coated.

## PILE DATA

Type: Steel (HP 8 x 36)
Capacity: Driven to Refusal
Est. Length: 75 ft.
No. Req'd: 23 (plus 1 test pile)

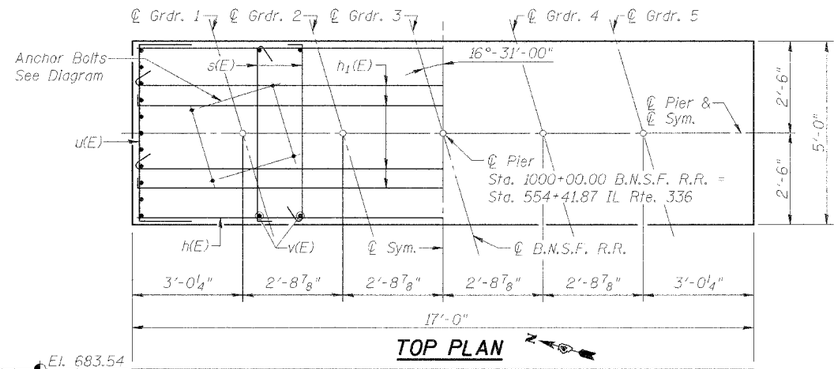


## TOP PLAN

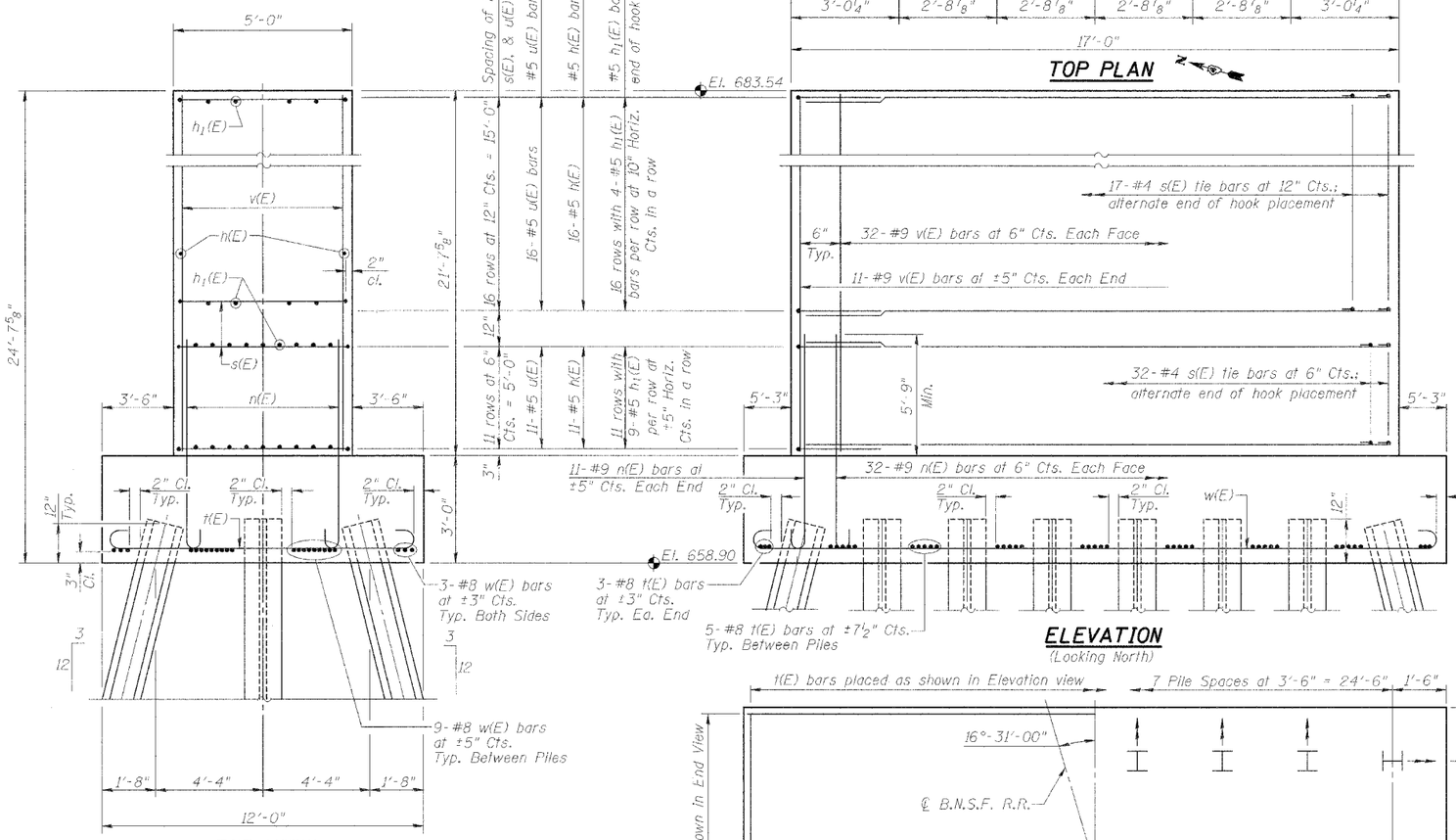


## ELEVATION
(Looking North)

## END VIEW
See Footing Plan for pile orientation and batter.

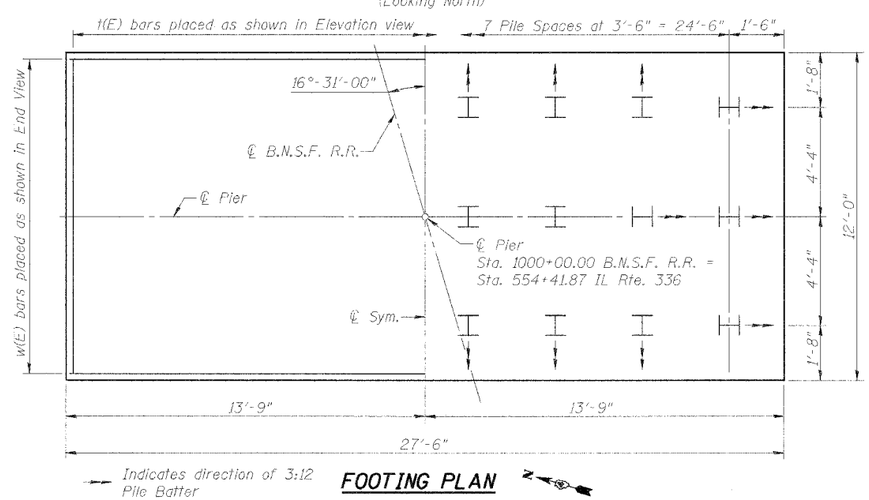


## FOOTING PLAN

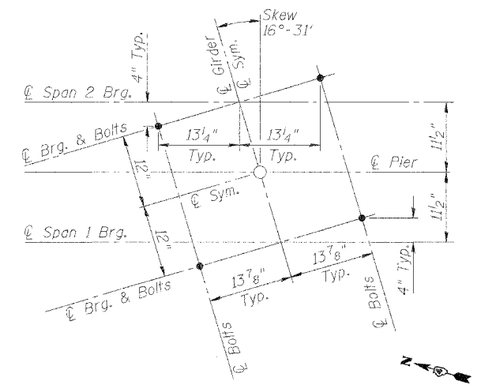


## ANCHOR BOLT SETTING DIAGRAM
Typical Each Girder Line

## PIER BILL OF MATERIAL

| Bar | No. | Size | Length | Shape |
|---|---|---|---|---|
| h(E) | 54 | #5 | 16'-8" | |
| h1(E) | 163 | #5 | 17'-11½" | |
| n(E) | 86 | #9 | 9'-9" | |
| s(E) | 624 | #4 | 5'-8½" | |
| t(E) | 41 | #8 | 13'-6" | |
| u(E) | 54 | #5 | 10'-6" | |
| v(E) | 86 | #9 | 21'-5" | |
| w(E) | 24 | #8 | 29'-0" | |
| Concrete Structures | | | Cu. Yd. | 104.8 |
| Reinforcement Bars, Epoxy Coated | | | Pound | 19,420 |
| Structure Excavation | | | Cu. Yd. | 75 |
| Furnishing Steel Piles HP 8 x 36 | | | Foot | 1,725 |
| Driving Steel Piles | | | Foot | 1,725 |
| Test Piles HP 8 x 36 | | | Each | 1 |
| Metal Shoes | | | Each | 23 |

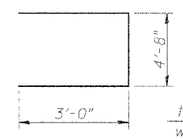


## BAR u(E)

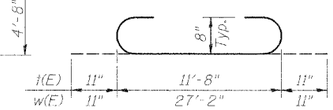


## BAR t(E) and w(E)

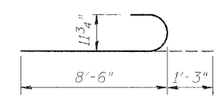


## BAR n(E)

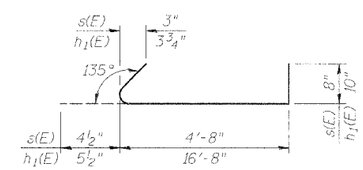


## BAR s(E) and h1(E)
(Hook around vertical bars, alternating end of hook placement in horizontal and vertical directions.)

PIER DETAILS
BURLINGTON NORTHERN
SANTA FE RAILROAD OVER
IL. ROUTE 336
F.A.P. ROUTE 315 SECT. 55-2
McDONOUGH COUNTY
STATION 554+41.87
STRUCTURE NO. 055-9901
B.N.S.F. LINE SEGMENT 0011
B.N.S.F. BRIDGE NO. 206.04

| | |
|---|---|
| DESIGNED | PJL |
| CHECKED | WDL |
| DRAWN | MGM |
| CHECKED | PJL |


STS CONSULTANTS
111 NE Jefferson Ave.
Peoria, Illinois 61602
Ph(309)676-8464
FAX(309)676-5445
IL Design Firm Reg. No. 224-001522



S:\13\055-9901.dgn 3/25/2006 11:06:07 AM