STATE OF ILLINOIS
DEPARTMENT OF TRANSPORTATION

ROUTE NO.	SECTION	COUNTY	TOTAL SHEETS	SHEET NO.
FAP 315	55-2	McDONOUGH	1025	541
FED. ROAD DIST. NO. 7	ILLINOIS	FED. AID PROJECT-		

SHEET NO. 6
16 SHEETS

Contract #68205

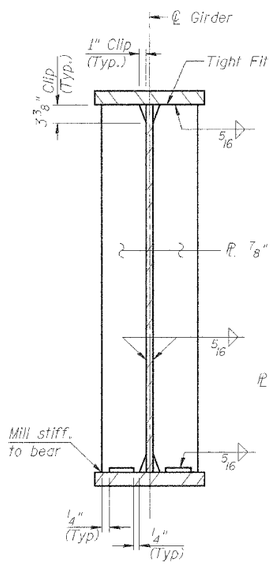

BEARING STIFFENER

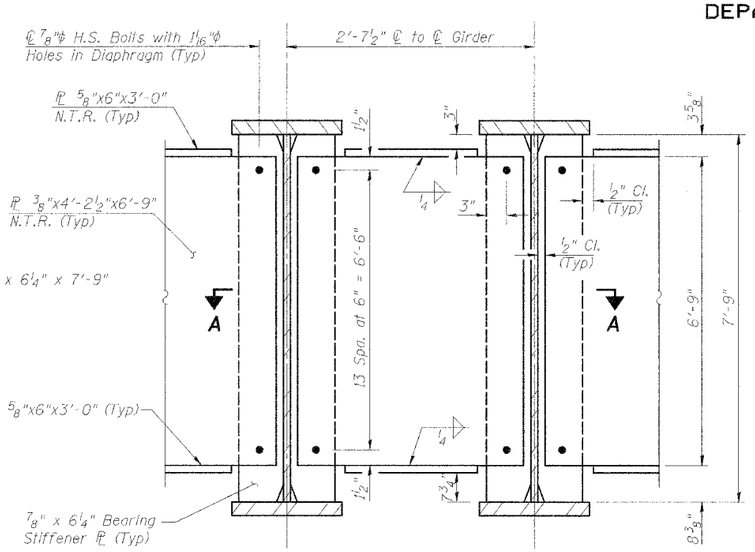

END DIAPHRAGM DETAIL
(See Access Opening Detail)

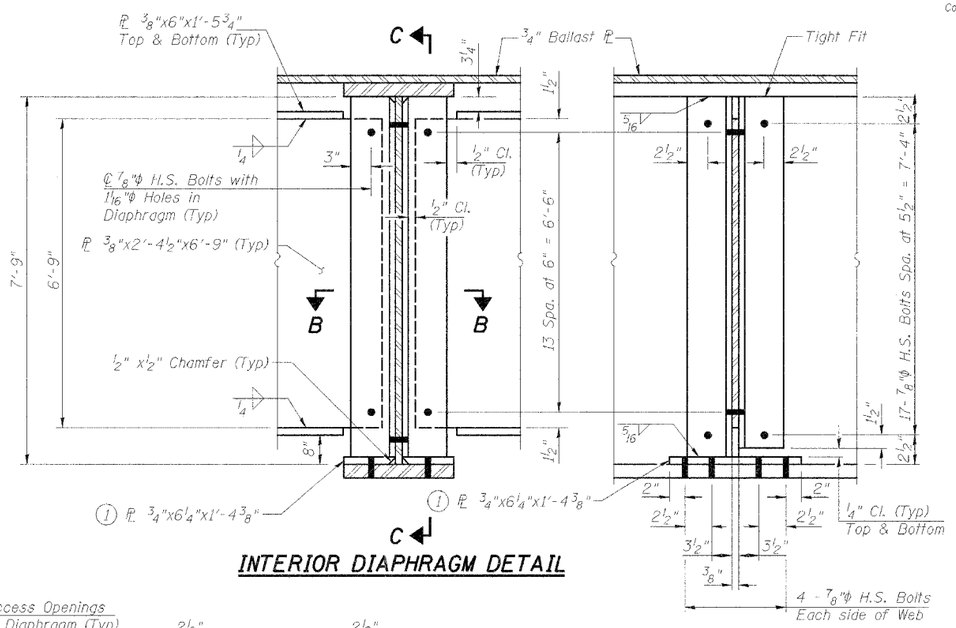

INTERIOR DIAPHRAGM DETAIL

SECTION C-C

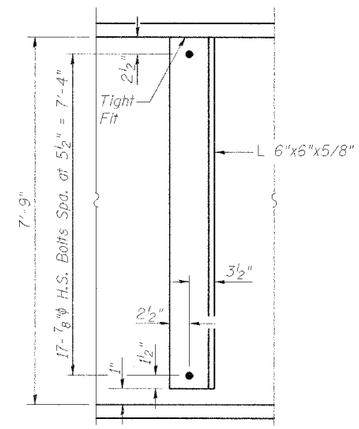

INTERMEDIATE STIFFENER DETAIL
(Without Interior Diaphragm)

(1) Shop bolted to girder with 4 H.S. bolts in standard size holes. 1/2" x 1/2" chamfer for weld clearance.

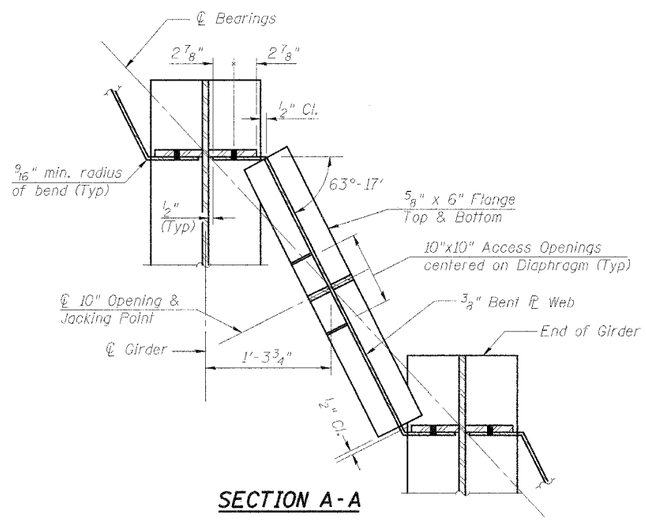

SECTION A-A

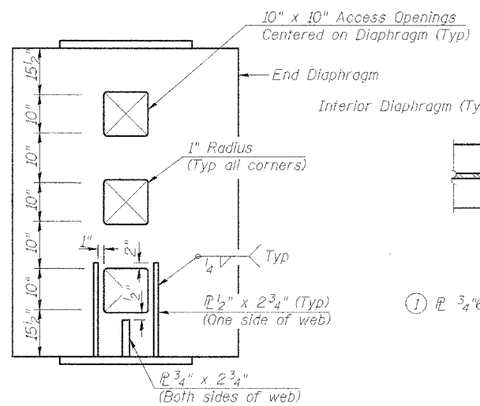

ACCESS OPENING DETAIL
(Located in all End Diaphragms)

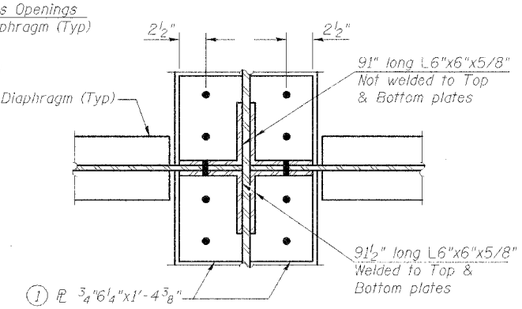

SECTION B-B

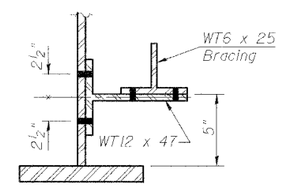

SECTION D-D

NOTES

1. All contact surfaces of joints for diaphragms, stiffeners, and lateral bracing shall be free of paint and lacquer.
2. All bolt holes in diaphragm and lateral bracing connections shall be 1 1/16"φ with two hardened washers required over all oversized holes.
3. The lower flanges of the end diaphragms are designed for jacking forces, under the condition that all end diaphragms are jacked equally and simultaneously.
4. "N.T.R." denotes plates to which Notch Toughness Requirements are applicable.
5. Work this sheet with Sheet 5 of 16.

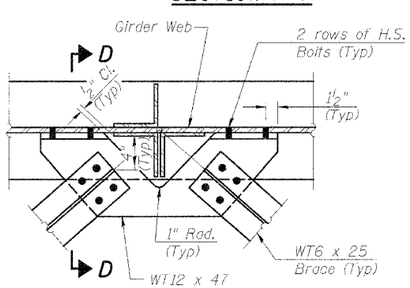

DETAIL A

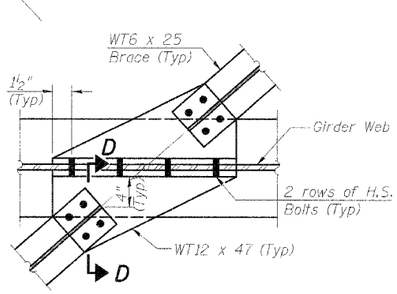

DETAIL B

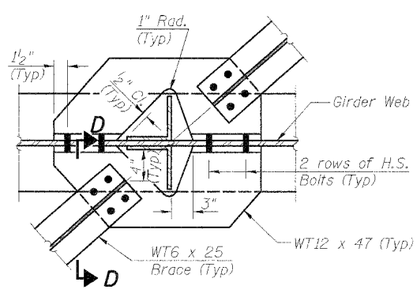

DETAIL C

Note:
4-H.S. bolts required at each WT6x25 Brace Connection.

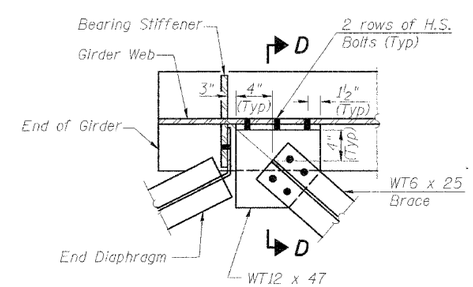

DETAIL D

LIN ENGINEERING, LTD.
30 W. Chestnut, Chatham, Illinois 62629
(217) 483-4568 FAX (217) 483-0706
Designed By: DLS | Checked By: MTH | Drawn By: JML
Date: 03/06 | File: 055S903.DGN

REVISIONS	
NAME	DATE

ILLINOIS DEPARTMENT OF TRANSPORTATION
STEEL DETAILS
BURLINGTON NORTHERN
SANTA FE RAILROAD OVER RAMP J
F.A.P. ROUTE 315 SECT. 55-2
McDONOUGH COUNTY
STATION 162+14.00
STRUCTURE NO. 055-9903
B.N.S.F. LINE SEGMENT 0011
B.N.S.F. BRIDGE NO. 206.00

$FILEABBREV$ $TIME$ $DATE$