CONTRACT NO. 72232

F.A.P. RTE.	SECTION	COUNTY	TOTAL SHEETS	SHEET NO.
*	**	MACOUPIN	231	94
STA.		TO STA.		
FED. ROAD DIST. NO.	ILLINOIS	FED. AID PROJECT		

* FAP 325 & FAP 604
** 14R; 115RS-2; 116RS-4; 101RS-2

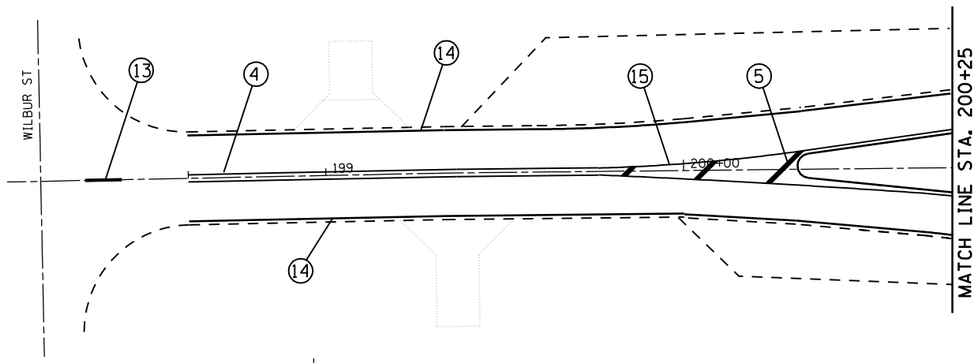

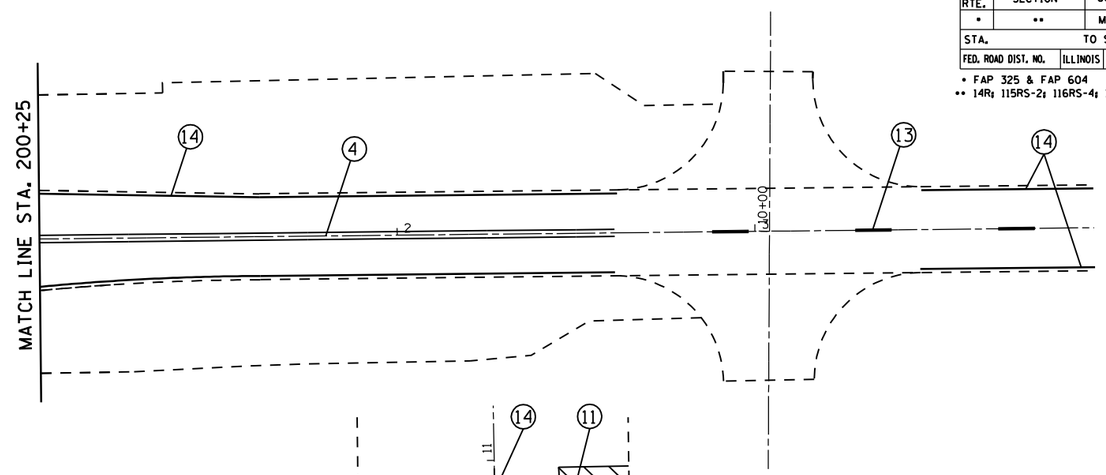

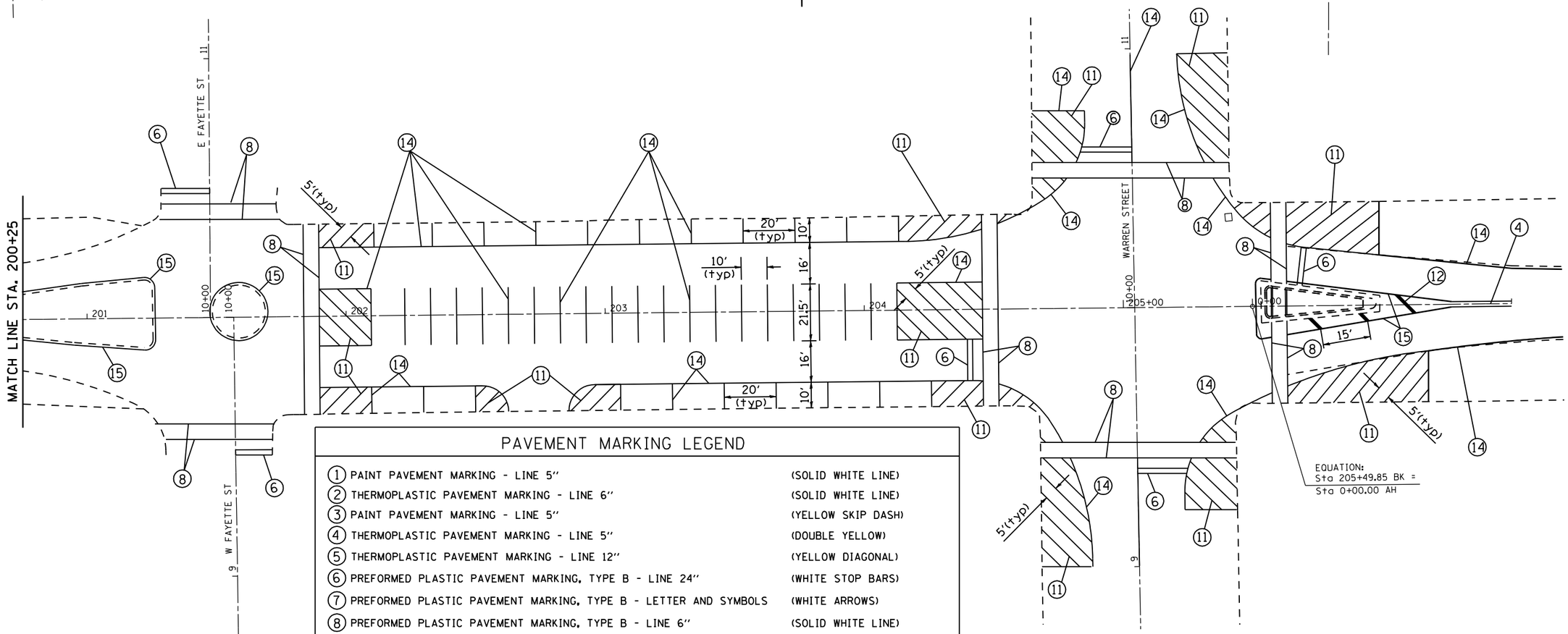

PAVEMENT MARKING LEGEND

1	PAINT PAVEMENT MARKING - LINE 5"	(SOLID WHITE LINE)
2	THERMOPLASTIC PAVEMENT MARKING - LINE 6"	(SOLID WHITE LINE)
3	PAINT PAVEMENT MARKING - LINE 5"	(YELLOW SKIP DASH)
4	THERMOPLASTIC PAVEMENT MARKING - LINE 5"	(DOUBLE YELLOW)
5	THERMOPLASTIC PAVEMENT MARKING - LINE 12"	(YELLOW DIAGONAL)
6	PREFORMED PLASTIC PAVEMENT MARKING, TYPE B - LINE 24"	(WHITE STOP BARS)
7	PREFORMED PLASTIC PAVEMENT MARKING, TYPE B - LETTER AND SYMBOLS	(WHITE ARROWS)
8	PREFORMED PLASTIC PAVEMENT MARKING, TYPE B - LINE 6"	(SOLID WHITE LINE)
9	PREFORMED PLASTIC PAVEMENT MARKING, TYPE B - LINE 12"	(WHITE DIAGONAL)
10	THERMOPLASTIC PAVEMENT MARKING - LINE 5"	(SOLID YELLOW LINE)
11	THERMOPLASTIC PAVEMENT MARKING, TYPE B - LINE 12"	(WHITE DIAGONAL)
12	PREFORMED PLASTIC PAVEMENT MARKING, TYPE B - LINE 5"	(SOLID WHITE LINE)
13	PREFORMED PLASTIC PAVEMENT MARKING, TYPE B - LINE 5"	(YELLOW SKIP DASH)
14	THERMOPLASTIC PAVEMENT MARKING, TYPE B - LINE 5"	(SOLID WHITE LINE)
15	THERMOPLASTIC PAVEMENT MARKING, TYPE B - LINE 5"	(SOLID YELLOW LINE)

BUNKER HILL

REVISIONS	
NAME	DATE

ILLINOIS DEPARTMENT OF TRANSPORTATION

PAVEMENT MARKING SHEETS

FAP 325 (IL 16) & FAP 604 (IL 159)
SECTION 14R; 115RS-2; 116RS-4; 101RS-2
MACOUPIN COUNTY

SCALE: 1" = 20' DRAWN BY

DATE $$DATE$$ CHECKED BY

PLOT DATE = $DATE$
FILE NAME = $FILEL$
PLOT SCALE = $CSCALE$
PLOT SCALE = $CSCALE$
USER NAME = $USER$