F.A.P. RTE.	SECTION	COUNTY	TOTAL SHEETS	SHEET NO.
774	107 WRS-2. L	EFFINGHAM	127	66
FED. ROAD DIST. NO.	ILLINOIS	FED. AID PROJECT		

CONTRACT NO. 74130

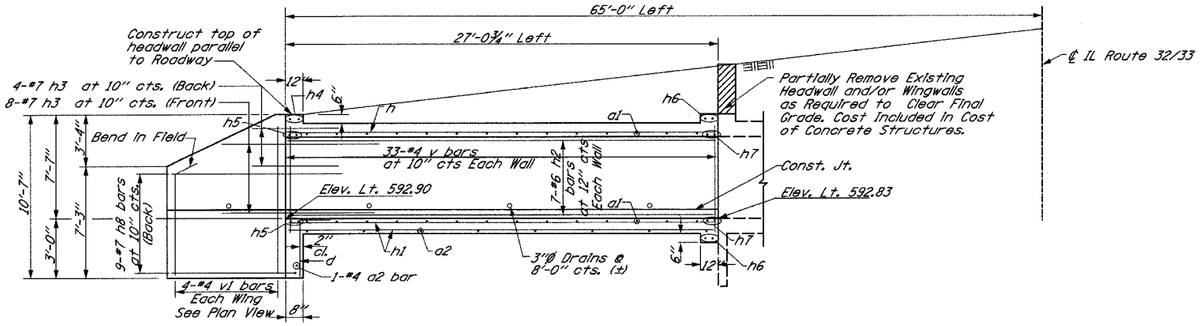

HALF LONG SECTION

Dimensions at Rt L to ℄ Roadway

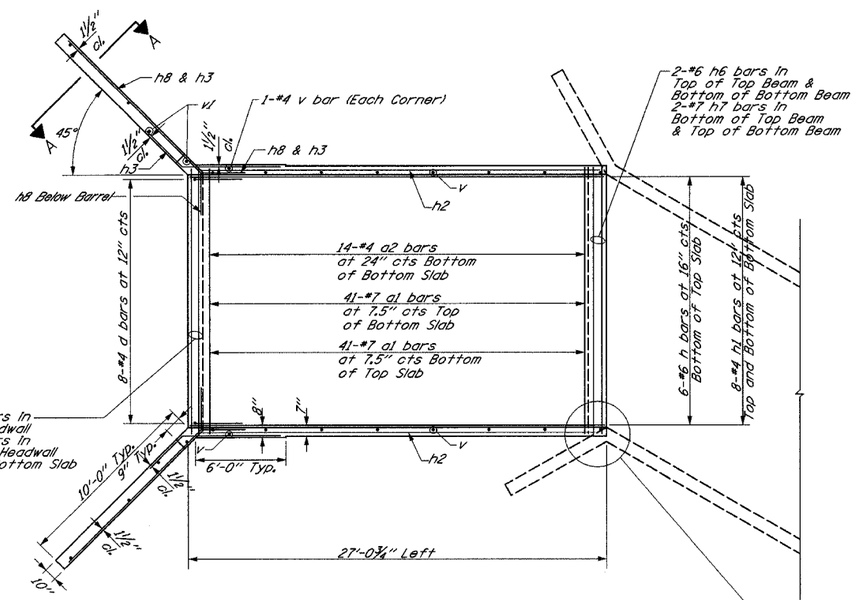

PLAN SHOWING REINFORCEMENT

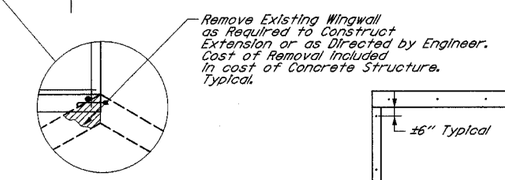

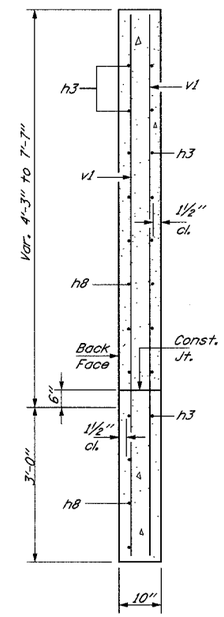

SECTION A-A

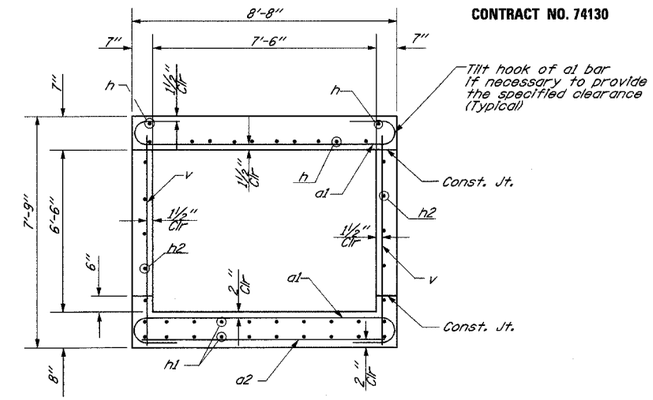

SECTION THRU BARREL

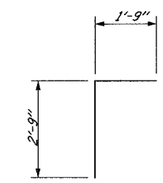

BAR d

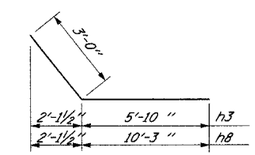

BARS h3 & h8

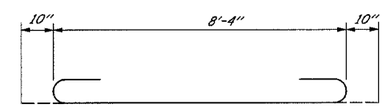

BAR a1

BILL OF MATERIAL

Bar	No.	Size	Length
a1	82	#7	10'-0"
a2	15	#4	7'-9"
d	8	#4	4'-6"
h	8	#6	26'-8"
h1	16	#4	26'-8"
h2	14	#6	26'-8"
h3	24	#7	8'-10"
h4	2	#6	7'-8"
h5	4	#7	8'-4"
h6	4	#6	8'-4"
h7	4	#7	8'-4"
h8	18	#7	13'-3"
v	68	#4	7'-5"
v1	8	#4	10'-3"
Concrete Structures		Cu Yd	25
Reinforcement Bars		Pound	4970
Expansion Bolts ¾"		Each	18

NOTES:

Design fill height ∠ 2'

Exposed edges shall be chamfered ¾".

Class S1 Concrete shall be used throughout.

Reinforcement Bars shall conform to the requirements of AASHTO M-31 or M-53, Grade 60.

Bars indicated thus 12x4-#5 etc. indicates 12 lines of #5 bars with 4 lengths per line.

Nonmetallic water seal used in the wingwall joints shall extend from the top of the footing to within 6" of the top of the headwall.

For Backfilling and Embankment, see Standard Specifications.

Hooked Expansion Bolts shall consist of self-drilling expansion shields and hooked bolts. Hooked Bolts shall extend a minimum of 9" into new concrete.

A distance of half the length of the wingwall but not less than six feet of the barrel shall be poured monolithically with the wingwalls.

All construction joints shall be bonded.

SPECIFICATION

1996 AASHTO with 1997, 1998, 1999, 2000 and 2002 Interims

DESIGN STRESSES

fy = 60,000 psi
f'c = 3,500 psi

LOADING HS 20-44

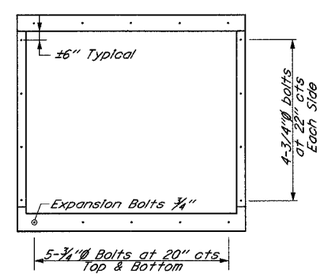

EXPANSION BOLT PLACEMENT DETAIL

REVISIONS	
NAME	DATE

ILLINOIS DEPARTMENT OF TRANSPORTATION

CAST-IN-PLACE BOX CULVERT EXTENSION DETAILS
℄ STA. 901+00.49 LT.
SHEET 1 OF 2

DATE 8/02

DRAWN BY ASB
CHECKED BY SJK

BLANK, WESSELINK, COOK & ASSOCIATES ENGINEERS - CONSULTANTS DECATUR, ILLINOIS

EFFINGHAM COUNTY