FAI ROUTE	SECTION	COUNTY	TOTAL SHEETS	SHEET NO
64	82-8RS-1	ST. CLAIR	39	6
STA.		TO STA.		
CONTRACT NO.: 76037				

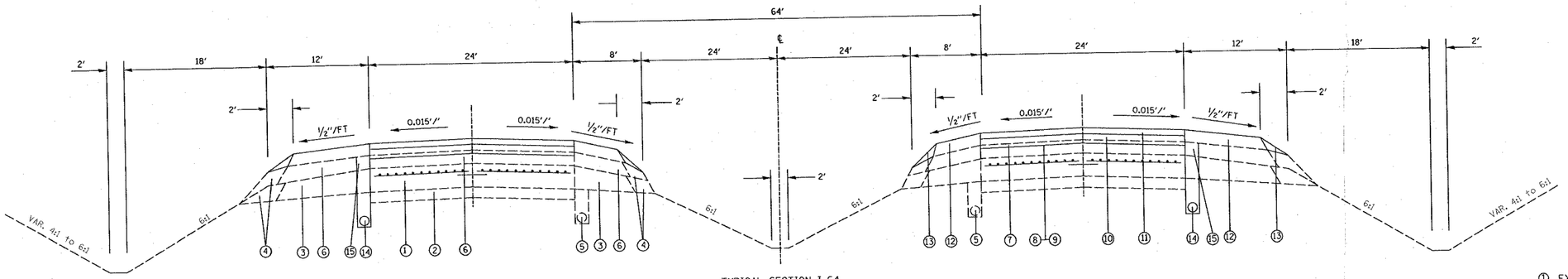

TYPICAL SECTION I-64

STA. 948+05.00 TO STA. 1026+85.91 (EB & WB)

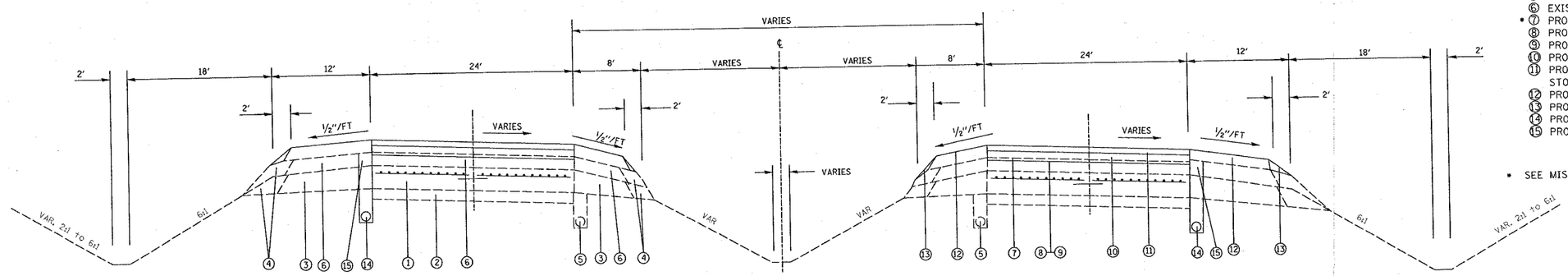

TYPICAL SECTION I-64

STA. 1026+85.91 TO STA. 1093+47.70 (EB)
STA. 126+28.27 TO STA. 193+47.70 (WB)

(STA. EQUATION: STA. 1026+85.91 = STA. 126+28.27) (WB)
(STA. EQUATION: STA. 193+47.70 = STA. 1093+47.70) (WB)

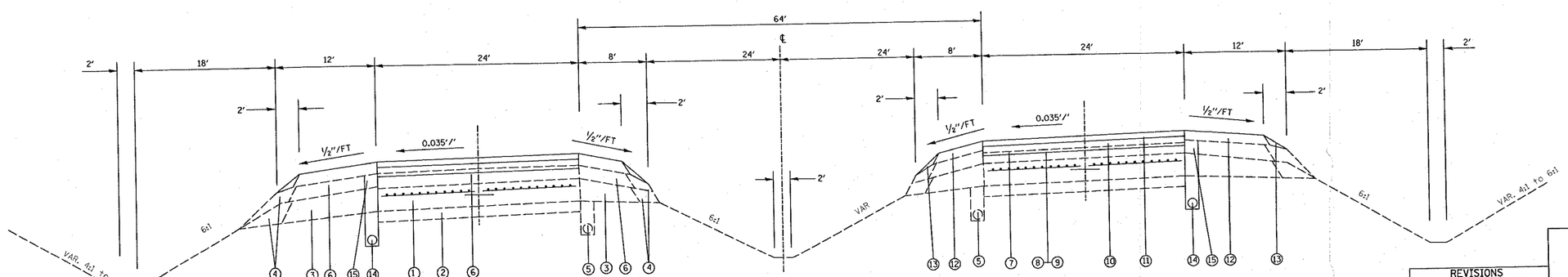

TYPICAL SECTION I-64

STA. 1093+47.70 TO STA. 1102+64.78 (EB & WB)

LEGEND

1. EXISTING CONT. REINFORCED P.C.C. PAVEMENT 8"
2. EXISTING STABILIZED SUB-BASE 4"
3. EXISTING STABILIZED SHOULDERS 8"
4. EXISTING AGGREGATE SHOULDER
5. EXISTING PIPE UNDERDRAINS, 4"
6. EXISTING BITUMINOUS OVERLAY - 3 1/4" OR 5"
7. • PROPOSED BITUMINOUS SURFACE REMOVAL 1 1/2"
8. PROPOSED BITUMINOUS MATERIALS (PRIME COAT)
9. PROPOSED AGGREGRATE (PRIME COAT)
10. PROPOSED BITUMINOUS BINDER COURSE, N 105, 2 1/4"
11. PROPOSED BITUMINOUS CONCRETE SURFACE COURSE, STONE MATRIX ASPHALT, 2"
12. PROPOSED BITUMINOUS SHOULDERS
13. PROPOSED AGGREGATE SHOULDER TYPE B WEDGE
14. PROPOSED PIPE UNDERDRAIN, 4"
15. PROPOSED SHOULDER REMOVAL & REPLACEMENT 5"

• SEE MISCELLANEOUS DETAILS SHEET FOR MILLING DETAILS

PLAN	
SURVEYED	
PLOTTED	
ALIGNMENT CHECKED	
RT. OF WAY CHECKED	
CADD FILE NAME	
NOTE BOOK NO.	
BY	DATE

REVISIONS

NAME	DATE

ILLINOIS DEPARTMENT OF TRANSPORTATION

TYPICAL SECTIONS

FAI ROUTE 64
SECTION 82-8RS-1
ST. CLAIR COUNTY

DRAWN BY:

PLOT DATE: 3/28/2006

$$DATE$$
3/28/2006
c:\projects\edi04405\plan\jln104405a.dgn
$$REF:
$$REF:
$$REF: