T.R.	SECTION	COUNTY	TOTAL SHEETS	SHEET NO.
336A	31BR	MADISON	11	7
STA. N/A		TO STA.N/A		
FED. ROAD DIST. NO. 8	ILLINOIS	FED. AID PROJECT		

Contract #76121

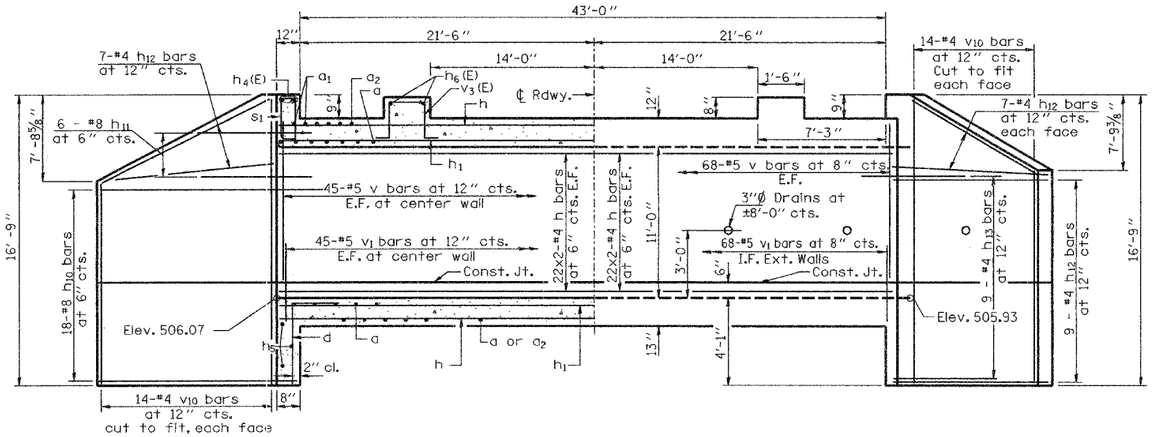

HALF LONG. SECTION
Showing bars in Center Wall

HALF ELEVATION
Showing bars in Outside Wall

REINFORCEMENT FRONT FACE

REINFORCEMENT BACK FACE

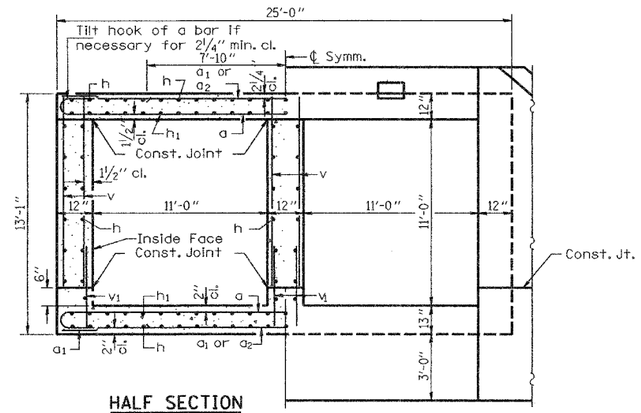

HALF SECTION THRU BARREL

HALF END ELEVATION

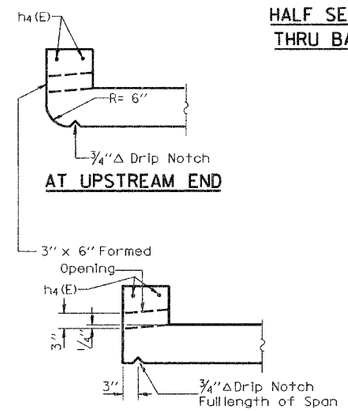

AT UPSTREAM END

AT DOWNSTREAM END

DRAIN DETAIL

CONCRETE BOX CULVERT BILL OF MATERIAL

Bar	No.	Size	Length	Shape
a	154	#6	26'-1"	
a_1	60	#6	24'-9"	
a_2	116	#6	15'-8"	
d	48	#5	5'-6"	
h	364	#4	23'-6"	
h_1	100	#6	24'-0"	
h_4(E)	4	#6	24'-9"	
h_5	6	#5	24'-9"	
h_6(E)	4	#5	24'-8"	
h_{10}	72	#8	17'-2"	
h_{11}	24	#8	8'-0"	
h_{12}	92	#4	13'-8"	
h_{13}	36	#4	8'-0"	
s	24	#4	4'-11"	
s_1	24	#4	4'-9"	
v	362	#5	11'-3"	
v_1	226	#5	3'-6"	
v_3(E)	50	#4	5'-5"	
v_{10}	112	#4	16'-5"	
v_{11}	2	#4	3'-6"	
Concrete Box Culverts			Cu. Yd.	168.3
Reinforcement Bars, Epoxy Coated			Pound	430
Reinforcement Bars			Pound	31980

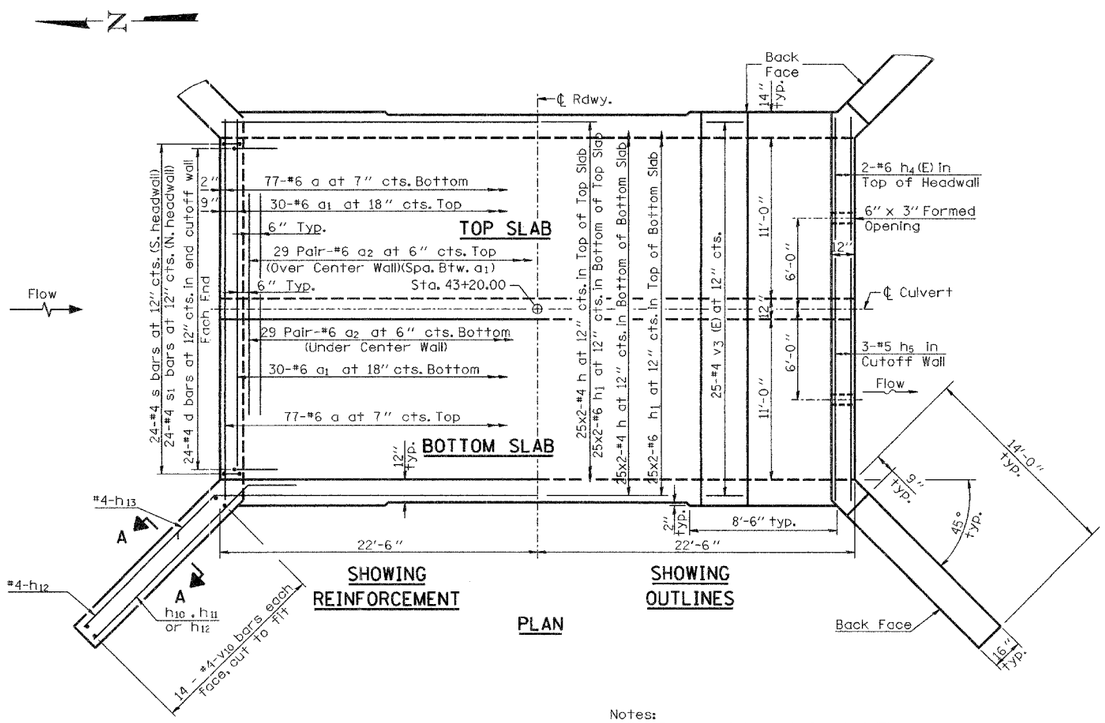

SHOWING REINFORCEMENT

SHOWING OUTLINES

PLAN

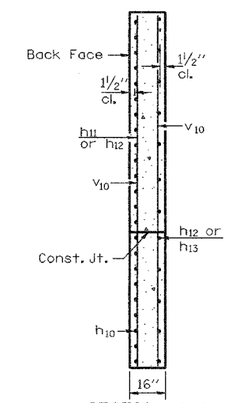

SECTION A-A

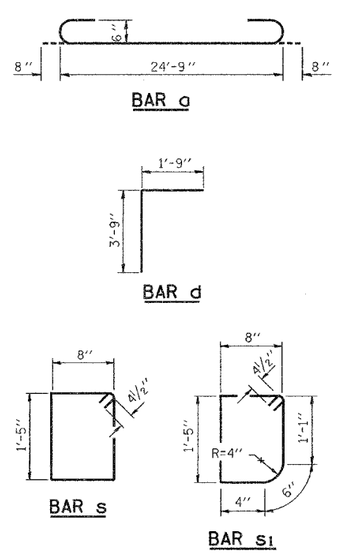

BAR a

BAR d

BAR s

BAR s_1

BAR v_3 (E)

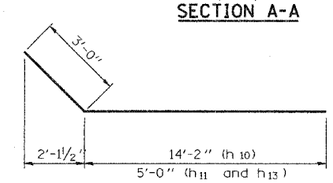

BAR h_{10}, h_{11} & h_{13}

MINIMUM BAR LAP

#4 bars = 1'-4"
#6 bars = 2'-0"

Notes:
Reinforcement bars designated (E) shall be epoxy coated.
Bars indicated thus 12x4-#5 etc. indicates 12 lines of bars with 4 lengths per line.
E.F. = Each Face
I.F. = Inside Face
The Northeast wingwall and the 16" water main intersect. See detail on sheet 8.

DESIGNED	Tom L. Kurtenbach
CHECKED	Pat D. Claussen
DRAWN	JTC
CHECKED	TLC / PDC

May 3, 2006
EXAMINED Thomas J. Domagalski — ENGINEER OF BRIDGE DESIGN
PASSED Ralph E. Anderson — ENGINEER OF BRIDGES AND STRUCTURES

Drawing not to Scale

REVISIONS NAME	DATE

ILLINOIS DEPARTMENT OF TRANSPORTATION
CULVERT
CULVERT DETAILS
STRUCTURE NO. 060-2045
TR 336A
SECTION 31BR
MADISON COUNTY
DRAWN BY
DATE
CHECKED BY

P-98-042-98

\culvert_details1.dgn 5/3/2006 2:02:02 PM