FAP ROUTE	SECTION	COUNTY	TOTAL SHEETS	SHEET NO
304	6RS-2	JERSEY	12	5
STA. _____		TO STA. _____		
CONTRACT NUMBER:	76942			

IL 16/100

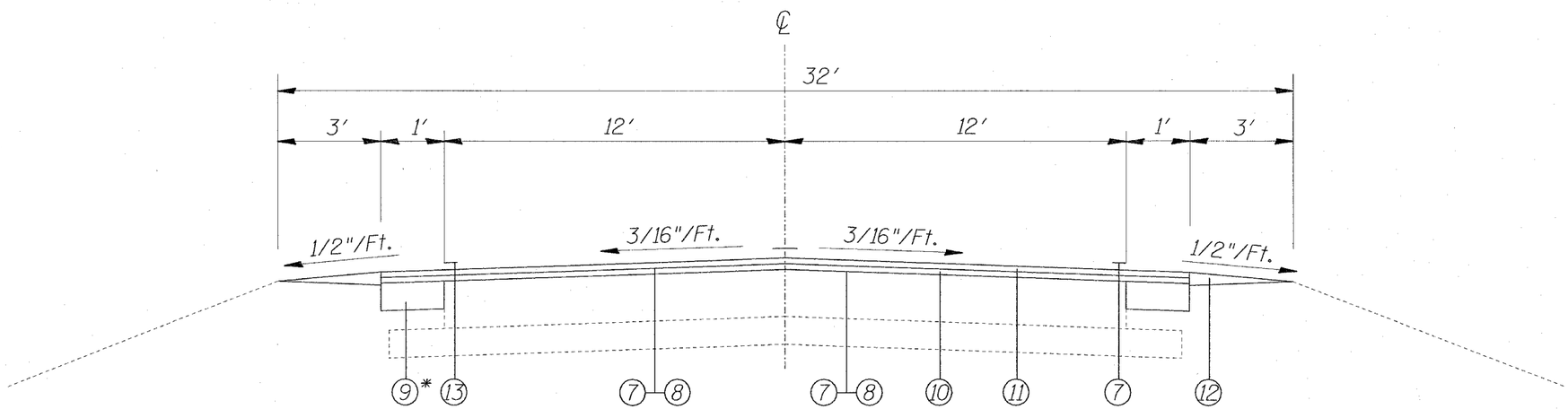

PROPOSED TYPICAL SECTION

STA. 742+66 TO STA. 796+00

* NO SAFTEY SHOULDERS AT THESE STATIONS, SEE DETAIL B

STA. 754+29.1 RT TO STA. 759+63.6 RT
STA. 754+97.0 LT TO STA. 758+96.6 LT
STA. 779+56.80 RT TO STA. 786+46.9 RT
STA. 780+13.37 LT TO STA. 785+13.31 LT

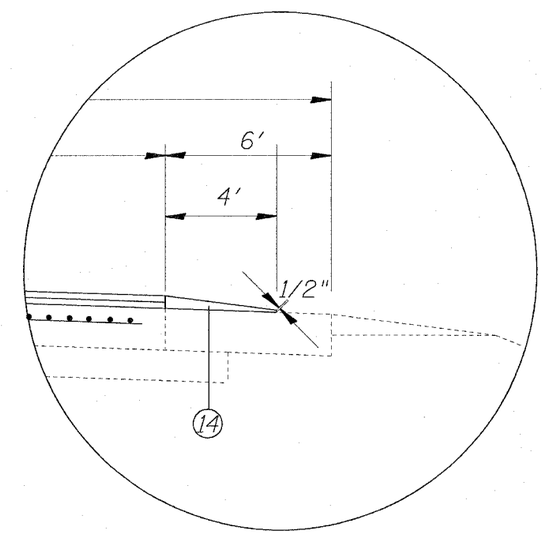

DETAIL B

1. EXISTING SUB-BASE GRANULAR MATERIAL TYPE A, 6"
2. EXISTING PCC PAVEMENT 10"
3. EXISTING PAVEMENT FABRIC
4. EXISTING BITUMINOUS SHOULDER 9"
5. EXISTING AGGREGATE WEDGE
6. EXISTING PAVEMENT MARKING
7. PROPOSED BITUMINOUS MATERIAL PRIME COAT
8. PROPOSED AGGREGATE PRIME COAT
9. PROPOSED BITUMINOUS CONCRETE BINDER COURSE SUPERPAVE, IL-19.0 N70, 3.5""
10. PROPOSED LEVEL BINDER (MACHINE METHOD) SUPERPAVE, N70, 1"
11. PROPOSED BITUMINOUS CONCRETE SURFACE COURSE SUPERPAVE, MIX "C", N70, 1 1/2"
12. PROPOSED AGGREGATE SHOULDERS, TYPE B
13. PROPOSED THERMOPLASTIC PAVEMENT MARKINGS
14. PROPOSED BITUMINOUS SHOULDERS, SUPERPAVE

REVISIONS	
NAME	DATE

ILLINOIS DEPARTMENT OF TRANSPORTATION

PROPOSED TYPICAL SECTIONS

FAP ROUTE 304 (IL 16/IL 100)
SECTION 6RS-2
JERSEY COUNTY

SCALE: VERT. HORIZ.
DATE
DRAWN BY
CHECKED BY

PLOT DATE = 3/29/2006
FILE NAME = c:\projects\ed08505\plan\pln08505a.dgn
PLOT SCALE = 50.0000 ' / IN.
REFERENCE = REF