F.A.U. RTE.	SECTION	COUNTY	TOTAL SHEETS	SHEET NO.
0369	97-000-25-00 BR	WILL	156	92
STA.		TO STA.		
FED. ROAD DIST. NO. 1	ILLINOIS	FED. AID PROJECT		

D-91-467-97 83757

PANEL SIGN DESIGN TYPE 1

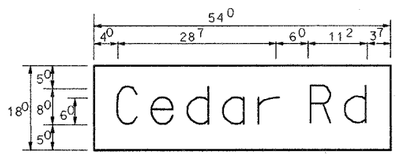

- Sq. M. each
6.75 Sq. Ft. each
2 Required
Design Series D

SUPPORTING CHANNELS

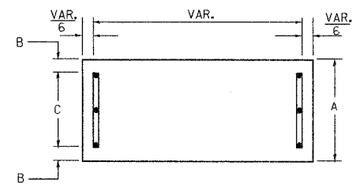

A	B	C
18"	2"	14"

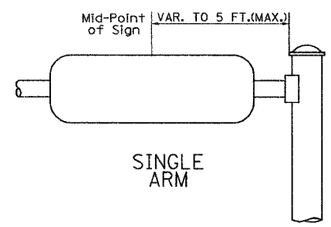

SINGLE ARM

PANEL SIGN DESIGN TYPE 2

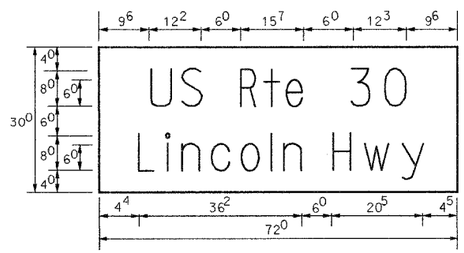

- Sq. M. each
15.0 Sq. Ft. each
2 Required
Design Series D

SUPPORTING CHANNELS

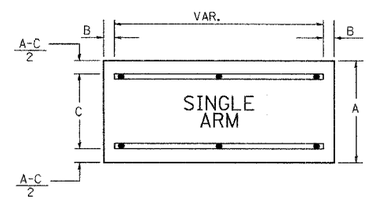

A	B	C
18"	2"	12"
30"	2"	22"

NOTE: SIGN DIMENSIONS ARE IN ENGLISH UNITS

GENERAL NOTES

1. WHERE MAST ARM MOUNTED STREET NAME SIGNS ARE SPECIFIED, THE MAST ARM ASSEMBLY AND POLES SHALL BE DESIGNED TO SUPPORT THE LOADINGS CALLED FOR ON STANDARDS 834001, 834006 AND 834011, AS APPLICABLE, PLUS TWO (2) SIGN PANELS 2'-6" x 6'-0" MOUNTED AS SHOWN. THE DESIGN SHALL BE IN ACCORDANCE WITH THE REQUIREMENTS OF THE CURRENT "STANDARD SPECIFICATIONS FOR STRUCTURAL SUPPORTS FOR HIGHWAY SIGNS, LUMINAIRES, AND TRAFFIC SIGNALS" AS PUBLISHED BY THE AMERICAN ASSOCIATION OF STATE HIGHWAY AND TRANSPORTATION OFFICIALS FOR 80 M.P.H. WIND VELOCITY.
2. ALL SIGNS SHALL HAVE A WHITE REFLECTORIZED LEGEND AND BORDER ON A GREEN REFLECTORIZED BACKGROUND, TYPE A SHEETING.
3. THE SIGN LENGTH SHOULD BE INCREASED IN 6-INCH INCREMENTS, BUT THE OVERALL LENGTH SHOULD NOT EXCEED 6'-0".
4. ALL BORDERS SHALL BE ¾" WIDE AND CORNER RADIUS SHALL BE 2-1/4 ".
5. SIGNFIX ALUMINUM CHANNEL FRAMING SYSTEM SHALL BE USED FOR ALL SIGNS ATTACHED TO SIGNAL POLES AND POSTS. LOCAL SUPPLIERS OF THE SIGNFIX ALUMINUM CHANNEL FRAMING SYSTEM ARE:
   - A.K.T. CORPORATION, SCHAUMBURG, IL
   - TUCKER COMPANY, INC., WAUWATOSA, WI
   - AMERICAN FABRICATION CO., CHICAGO HEIGHTS, IL
   - WESTERN TRAFFIC CONTROL INC., CICERO, IL

PARTS LISTING:

SIGN CHANNEL	PART #HPN053 (MED. CHANNEL)
SIGN SCREWS	¼" x 14 x 1" H.W.H. #3 SELF TAPPING WITH NEOPRENE WASHER
BRACKETS	PART #HPN034 (UNIVERSAL) CHANNEL CLAMPS WITH STAINLESS STEEL STRAPPING

OTHER BRANDS OF MOUNTING HARDWARE ARE ACCEPTABLE, BASED UPON THE DEPARTMENT'S APPROVAL AND COMPATIBILITY WITH THE CHANNEL/BRACKET OF THE ABOVE PRODUCT.

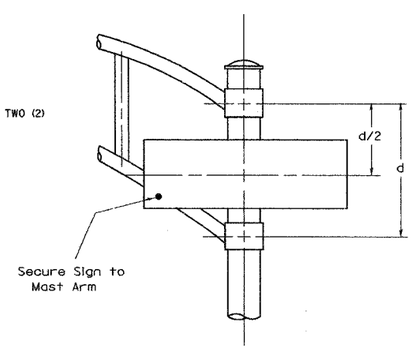

DUAL ARM

SIGNFIX ALUMINUM CHANNEL FRAMING SYSTEM

Shall be used. See Note #5.

EXAMPLE, 2^{3} — DENOTES $\frac{3}{8}$"

Upper Case To Lower Case
Spacing Chart 8-6 Inch Series "C & D"

FIRST LETTER	SECOND LETTER: a c d e g o q		b h i k l m n p r u		f w		j		s t		v y		x		z	
SERIES	C	D	C	D	C	D	C	D	C	D	C	D	C	D	C	D
A W X	1^{2}	1^{4}	1^{4}	1^{5}	1^{2}	1^{4}	0^{6}	1^{0}	1^{1}	1^{4}	0^{6}	1^{0}	1^{1}	1^{2}	1^{2}	1^{4}
B	1^{4}	1^{5}	2^{0}	2^{1}	1^{4}	1^{5}	1^{1}	1^{2}	1^{4}	1^{5}	1^{2}	1^{4}	1^{2}	1^{4}	1^{6}	1^{7}
C E G	1^{4}	1^{5}	2^{0}	2^{1}	1^{2}	1^{4}	0^{6}	1^{0}	1^{2}	1^{4}	1^{2}	1^{4}	1^{4}	1^{5}	1^{4}	1^{5}
D O Q R	1^{4}	1^{5}	2^{0}	2^{1}	1^{4}	1^{5}	0^{6}	1^{0}	1^{2}	1^{4}	1^{2}	1^{4}	1^{4}	1^{5}	1^{4}	1^{5}
F	0^{5}	0^{6}	1^{4}	1^{5}	0^{6}	1^{0}	0^{5}	0^{6}	0^{6}	1^{0}	0^{6}	1^{0}	0^{6}	1^{0}	1^{1}	1^{2}
H I M N	2^{0}	2^{1}	2^{2}	2^{4}	2^{0}	2^{1}	1^{4}	1^{5}	1^{6}	1^{7}	1^{6}	1^{7}	2^{0}	2^{1}	2^{0}	2^{1}
J U	2^{0}	2^{1}	2^{0}	2^{1}	1^{6}	1^{7}	1^{4}	1^{5}	1^{6}	1^{7}	1^{6}	1^{7}	1^{6}	1^{7}	2^{0}	2^{1}
K L	1^{1}	1^{2}	1^{6}	1^{7}	1^{1}	1^{2}	0^{5}	0^{6}	1^{1}	1^{2}	1^{1}	1^{2}	1^{1}	1^{2}	1^{2}	1^{4}
P	1^{2}	1^{4}	1^{4}	1^{5}	1^{2}	1^{4}	0^{5}	0^{6}	1^{1}	1^{2}	1^{1}	1^{2}	1^{2}	1^{4}	1^{2}	1^{4}
S	1^{2}	1^{4}	1^{6}	1^{7}	1^{2}	1^{4}	0^{6}	1^{0}	1^{2}	1^{4}	1^{2}	1^{4}	1^{2}	1^{4}	1^{2}	1^{4}
T	1^{1}	1^{2}	1^{6}	1^{7}	0^{6}	1^{0}	0^{6}	1^{0}	1^{1}	1^{2}	1^{1}	1^{2}	1^{1}	1^{2}	1^{2}	1^{4}
V	0^{6}	1^{0}	1^{4}	1^{5}	1^{1}	1^{2}	0^{6}	1^{0}	1^{2}	1^{4}	1^{2}	1^{4}	1^{2}	1^{4}	1^{2}	1^{4}
Y	0^{5}	0^{6}	1^{4}	1^{5}	0^{6}	1^{0}	0^{5}	0^{6}	0^{5}	0^{7}	0^{5}	0^{6}	0^{6}	1^{0}	1^{1}	1^{2}
Z	1^{6}	1^{7}	2^{2}	2^{4}	1^{6}	1^{7}	1^{2}	1^{4}	1^{6}	1^{7}	1^{6}	1^{7}	1^{6}	1^{7}	2^{0}	2^{1}

Lower Case To Lower Case
Spacing Chart 6 Inch Series "C & D"

FIRST LETTER	SECOND LETTER: a c d e g o q		b h i k l m n p r u		f w		j		s t		v y		x		z	
SERIES	C	D	C	D	C	D	C	D	C	D	C	D	C	D	C	D
a d h g l j i m n q u	1^{6}	1^{7}	2^{2}	2^{4}	1^{6}	1^{7}	1^{2}	1^{4}	1^{4}	1^{5}	1^{4}	1^{5}	1^{6}	1^{7}	1^{6}	1^{7}
b f k o p s	1^{2}	1^{4}	1^{6}	1^{7}	1^{1}	1^{2}	0^{5}	0^{6}	1^{1}	1^{2}	1^{1}	1^{2}	1^{2}	1^{4}	1^{2}	1^{4}
c e	1^{2}	1^{4}	1^{6}	1^{7}	1^{2}	1^{4}	0^{6}	1^{0}	1^{2}	1^{4}	1^{2}	1^{4}	1^{2}	1^{4}	1^{2}	1^{4}
r	0^{6}	1^{0}	1^{2}	1^{4}	0^{6}	1^{0}	0^{3}	0^{3}	0^{5}	0^{6}	0^{5}	0^{6}	0^{6}	1^{0}	0^{6}	1^{0}
t z	1^{2}	1^{4}	1^{6}	1^{7}	1^{2}	1^{4}	0^{6}	1^{0}	1^{1}	1^{2}	1^{1}	1^{2}	1^{2}	1^{4}	1^{2}	1^{4}
v y	1^{1}	1^{2}	1^{4}	1^{5}	1^{1}	1^{2}	0^{5}	0^{6}	0^{6}	1^{0}	0^{6}	1^{0}	1^{1}	1^{2}	1^{1}	1^{2}
w	1^{1}	1^{2}	1^{4}	1^{5}	1^{1}	1^{2}	0^{5}	0^{6}	1^{1}	1^{2}	1^{1}	1^{2}	1^{1}	1^{2}	1^{2}	1^{4}
x	1^{2}	1^{4}	1^{6}	1^{7}	1^{1}	1^{2}	0^{5}	0^{6}	1^{1}	1^{2}	1^{1}	1^{2}	1^{1}	1^{2}	1^{2}	1^{4}

Number To Number
Spacing Chart 8 Inch Series "C & D"

FIRST NUMBER	SECOND NUMBER: 0		1		2		3		4		5		6		7		8		9	
SERIES	C	D	C	D	C	D	C	D	C	D	C	D	C	D	C	D	C	D	C	D
0 9	1^{6}	1^{7}	1^{6}	1^{7}	1^{4}	1^{5}	1^{2}	1^{4}	1^{4}	1^{5}	1^{4}	1^{5}	1^{6}	1^{7}	1^{2}	1^{4}	1^{6}	1^{7}	1^{6}	1^{7}
1	2^{0}	2^{1}	2^{0}	2^{1}	2^{0}	2^{1}	1^{6}	1^{7}	1^{4}	1^{5}	2^{0}	2^{1}	2^{0}	2^{1}	1^{4}	1^{5}	2^{0}	2^{1}	2^{0}	2^{1}
2 3 4	1^{4}	1^{5}	1^{4}	1^{5}	1^{4}	1^{5}	1^{2}	1^{4}	1^{2}	1^{4}	1^{4}	1^{5}	1^{4}	1^{5}	1^{1}	1^{2}	1^{6}	1^{7}	1^{4}	1^{5}
5	1^{4}	1^{5}	1^{4}	1^{5}	1^{4}	1^{5}	1^{1}	1^{2}	1^{1}	1^{2}	1^{4}	1^{5}	1^{4}	1^{5}	1^{1}	1^{2}	1^{4}	1^{5}	1^{4}	1^{5}
6	1^{6}	1^{7}	1^{4}	1^{5}	1^{4}	1^{5}	1^{2}	1^{5}	1^{2}	1^{4}	1^{4}	1^{5}	1^{4}	1^{5}	1^{1}	1^{2}	1^{4}	1^{5}	1^{4}	1^{5}
7	1^{2}	1^{4}	1^{2}	1^{4}	1^{4}	1^{5}	1^{2}	1^{5}	0^{5}	0^{6}	1^{2}	1^{4}	1^{4}	1^{5}	1^{1}	1^{2}	1^{4}	1^{5}	1^{2}	1^{4}
8	1^{6}	1^{7}	1^{6}	1^{7}	1^{4}	1^{5}	1^{2}	1^{5}	1^{2}	1^{4}	1^{4}	1^{5}	1^{6}	1^{7}	1^{2}	1^{4}	1^{6}	1^{7}	1^{4}	1^{5}

UPPER AND LOWER CASE LETTER WIDTHS

LETTERS	6 INCH UPPER CASE LETTERS SERIES C	6 INCH UPPER CASE LETTERS SERIES D	8 INCH UPPER CASE LETTERS SERIES C	8 INCH UPPER CASE LETTERS SERIES D	LETTERS	6 INCH LOWER CASE LETTERS SERIES C	6 INCH LOWER CASE LETTERS SERIES D
A	3^{6}	5^{0}	5^{0}	6^{5}	a	3^{5}	4^{2}
B	3^{2}	4^{0}	4^{3}	5^{3}	b	3^{5}	4^{2}
C	3^{2}	4^{0}	4^{3}	5^{3}	c	3^{5}	4^{1}
D	3^{2}	4^{0}	4^{3}	5^{3}	d	3^{5}	4^{2}
E	3^{0}	3^{5}	4^{0}	4^{7}	e	3^{5}	4^{2}
F	3^{0}	3^{5}	4^{0}	4^{7}	f	2^{3}	2^{6}
G	3^{2}	4^{0}	4^{3}	5^{3}	g	3^{5}	4^{2}
H	3^{2}	4^{0}	4^{3}	5^{3}	h	3^{5}	4^{2}
I	0^{7}	0^{7}	1^{1}	1^{2}	i	1^{1}	1^{1}
J	3^{0}	3^{6}	4^{0}	5^{0}	j	2^{0}	2^{2}
K	3^{2}	4^{1}	4^{3}	5^{4}	k	3^{5}	4^{2}
L	3^{0}	3^{5}	4^{0}	4^{7}	l	1^{1}	1^{1}
M	3^{7}	4^{5}	5^{1}	6^{1}	m	6^{0}	7^{0}
N	3^{2}	4^{0}	4^{3}	5^{3}	n	3^{5}	4^{2}
O	3^{4}	4^{2}	4^{5}	5^{5}	o	3^{6}	4^{3}
P	3^{2}	4^{0}	4^{3}	5^{3}	p	3^{5}	4^{2}
Q	3^{4}	4^{2}	4^{5}	5^{5}	q	3^{5}	4^{2}
R	3^{2}	4^{0}	4^{3}	5^{3}	r	2^{6}	3^{2}
S	3^{2}	4^{0}	4^{3}	5^{3}	s	3^{6}	4^{2}
T	3^{0}	3^{5}	4^{0}	4^{7}	t	2^{7}	3^{2}
U	3^{2}	4^{0}	4^{3}	5^{3}	u	3^{5}	4^{2}
V	3^{5}	4^{4}	4^{7}	6^{0}	v	4^{2}	4^{7}
W	4^{4}	5^{2}	6^{0}	7^{0}	w	5^{5}	6^{4}
X	3^{4}	4^{0}	4^{5}	5^{3}	x	4^{4}	5^{1}
Y	3^{6}	5^{0}	5^{0}	6^{6}	y	4^{6}	5^{3}
Z	3^{2}	4^{0}	4^{3}	5^{3}	z	3^{6}	4^{3}

NUMBER	6 INCH SERIES C	6 INCH SERIES D	8 INCH SERIES C	8 INCH SERIES D
1	1^{2}	1^{4}	1^{5}	2^{0}
2	3^{2}	4^{0}	4^{3}	5^{3}
3	3^{2}	4^{0}	4^{3}	5^{3}
4	3^{5}	4^{3}	4^{7}	5^{7}
5	3^{2}	4^{0}	4^{3}	5^{3}
6	3^{2}	4^{0}	4^{3}	5^{3}
7	3^{2}	4^{0}	4^{3}	5^{3}
8	3^{2}	4^{0}	4^{3}	5^{3}
9	3^{2}	4^{0}	4^{3}	5^{3}
0	3^{4}	4^{2}	4^{5}	5^{5}

REVISIONS NAME	DATE
D.A.Z./D.A.G.	11/90
	6/98
CADD	10/00

Illinois Department of Transportation
DISTRICT 1

MAST ARM MOUNTED STREET NAME SIGNS

SCALE: NONE
DATE: JULY 20, 2005

DRAWN BY: RDB
DESIGNED BY: JHE
CHECKED BY: DAD

j:\projects\projects 2003\cedarrd\18_signs.dgn
20 JUL 2005
12:52:45