F.A.U. RTE.	SECTION	COUNTY	TOTAL SHEETS	SHEET NO.
0369	97-00025-00-BR	WILL	156	128
STA.		TO STA.		
FED. ROAD DIST. NO.	ILLINOIS	FED. AID PROJECT		

CONTRACT NO: 83757

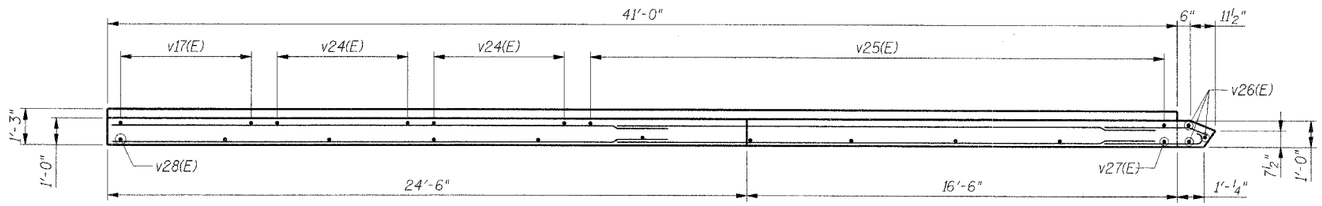

TOP PLAN

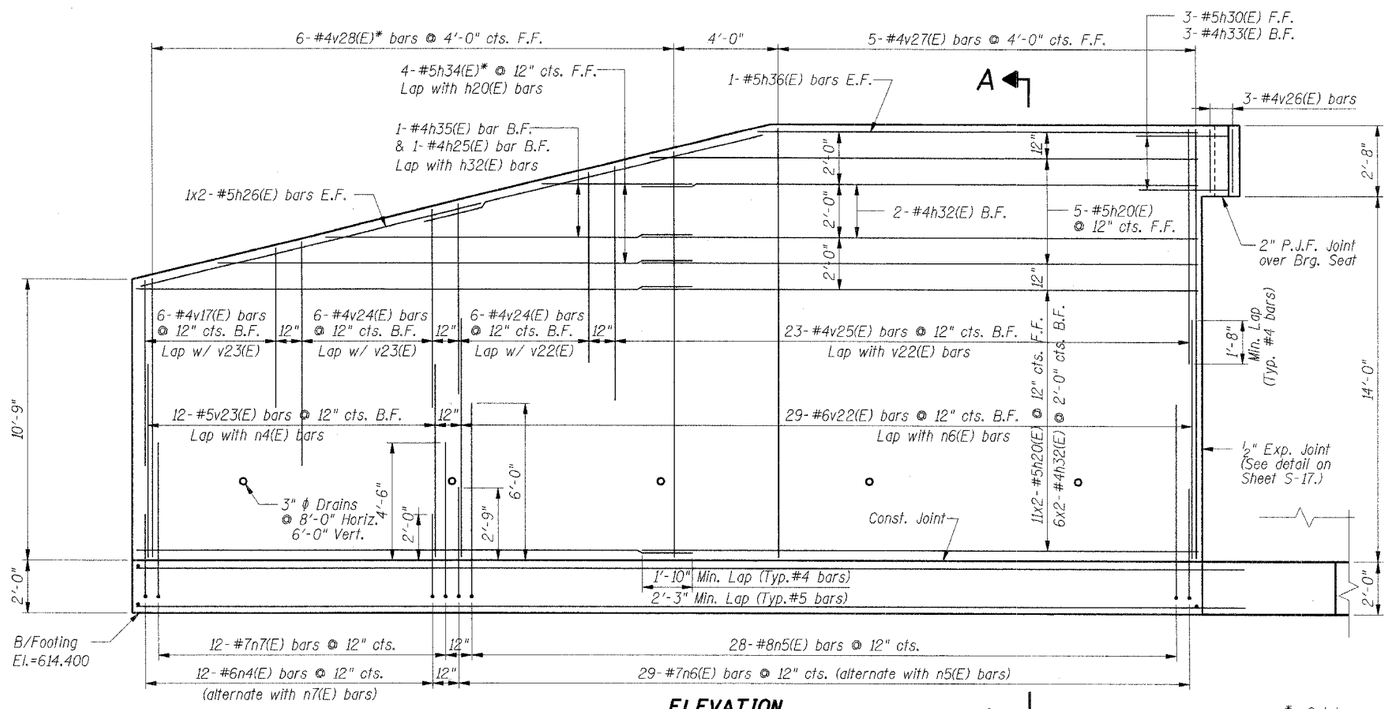

ELEVATION

(NW wing wall - looking northeast)

* Cut bars according to diagram.

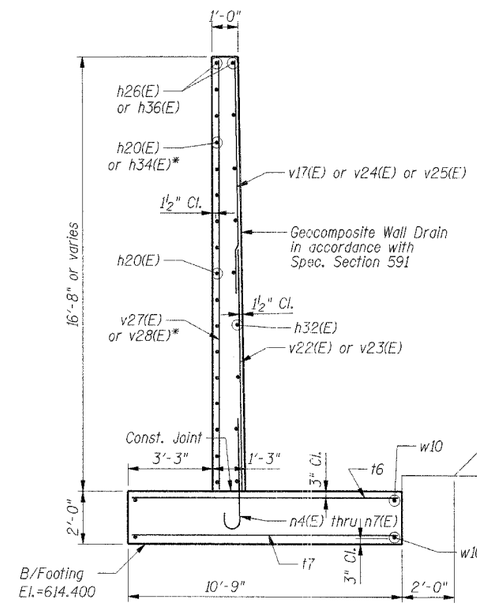

SECTION A-A

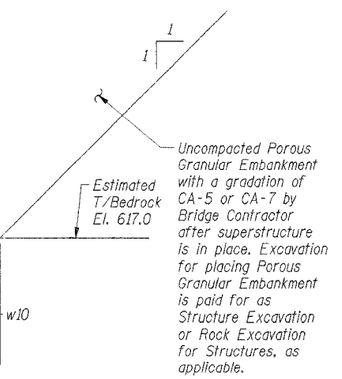

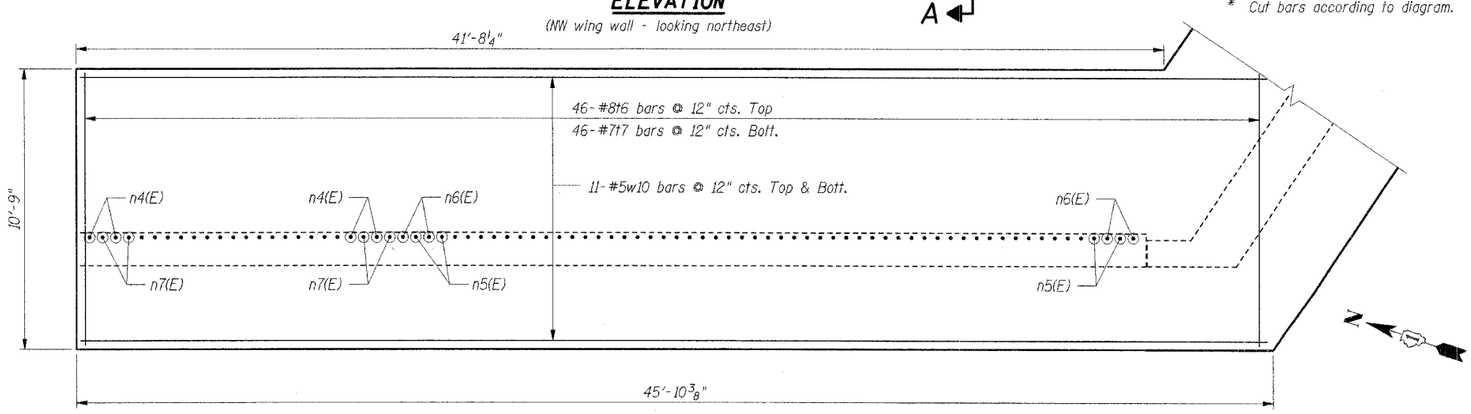

FOOTING PLAN

Notes:

1. Reinforcement Bars designated (E) shall be epoxy coated.
2. The back face of the abutments and wing walls shall be waterproofed according to Article 503.18 of the Standard Specification. Cost included with Concrete Structures.
3. For Bar List, Bar details, Bar cutting diagram and Bill of Material, see Sheet S-21.
4. Work this Sheet with Sheet S-18.
5. Bars indicated thus 20 x 3-#5 etc. indicates 20 lines of bars with 3 lengths per line.
6. F.F. denotes front face, B.F. denotes back face & E.F. denotes each face.

SHT. S-19

REVISIONS	
NAME	DATE

VILLAGE OF NEW LENOX
F.A.U. (0369) CEDAR ROAD OVER HICKORY CREEK
WILL COUNTY

NORTH ABUTMENT DETAILS 1

SCALE: ⅜"=1'-0"
DRAWN BY: FZD
DATE: 07/01/05
CHECKED BY: KPS

TENG

TENG & ASSOCIATES, INC.
ENGINEERS/ARCHITECTS/PLANNERS
205 N. MICHIGAN AVE. CHICAGO, IL 60601
TELEPHONE: 312/616-0000

..\SCROONTL.DGN,..\TTBOONZ.DGN,..\SCROONTL.DGN,..\SCROONTL.DGN,..\DEPCONT9.DGN,..\SCROONTL.DGN,..\ABTOONTW.DGN,..\ABTOONTW.DGN,..\ABTOONTK.DGN,..\ABTOONW0.DGN
7-19-2005, 16:07:42
S:\DOCUMENT\023280\STRUCTURE\ABTOONL3.DGN
ROSSPF