CONTRACT NO. 88804

F.A.P. RTE.	SECTION	COUNTY	TOTAL SHEETS	SHEET NO.
669	11W-3,RS-8,*	TAZEWELL	442	31
STA.		TO STA.		
FED. ROAD DIST. NO.	ILLINOIS	FED. AID PROJECT		

* 11BR-1, 11BR-2

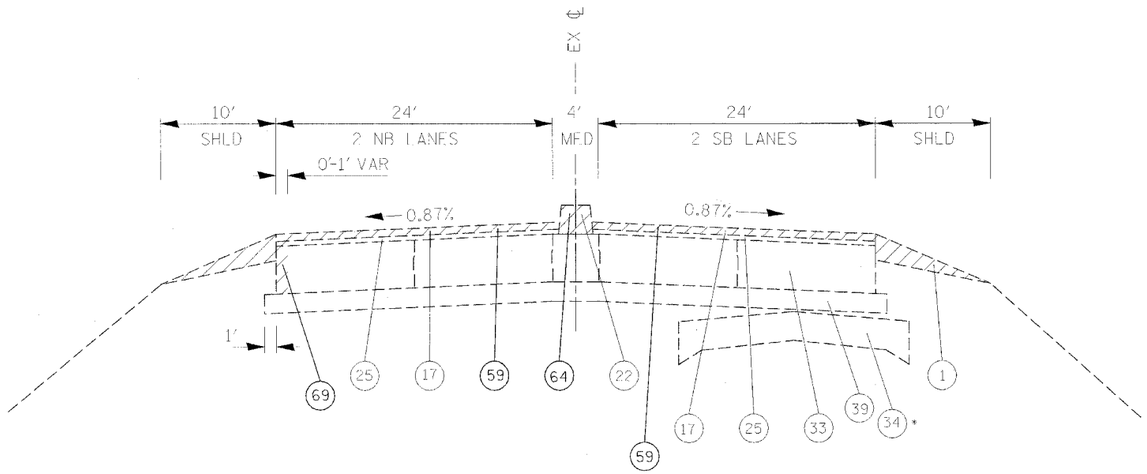

E-13

EXISTING TYPICAL SECTION
IL RTE 29
STA 294+00 TO 296+62.59
STA 306+53.13 TO 307+16

* EX 9-6-9 PVMT FROM
STA 282+70 TO STA 295+00

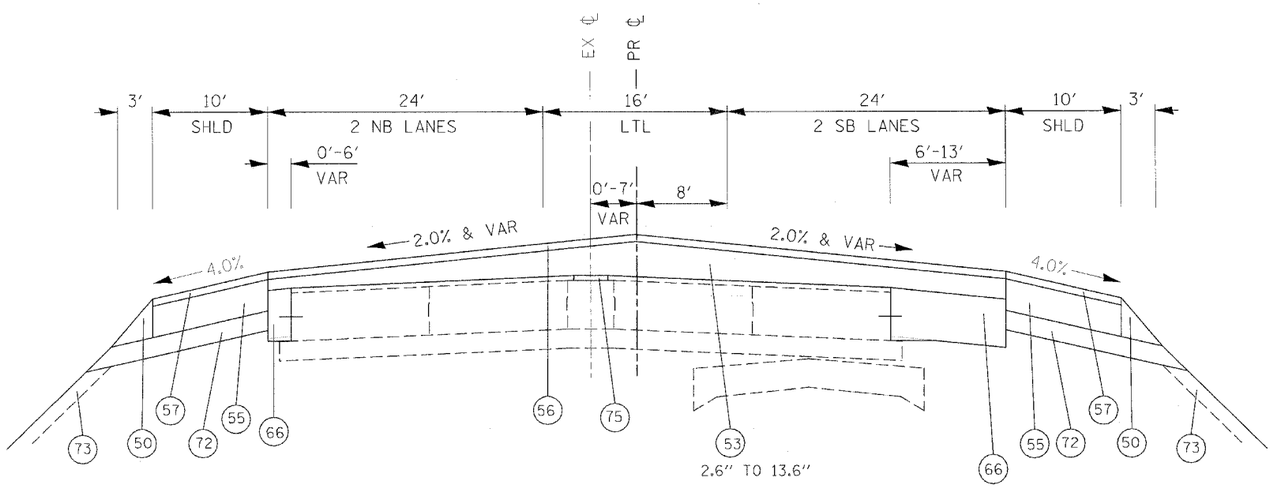

P-13

PROPOSED TYPICAL SECTION
IL RTE 29
STA 294+00 TO 299+25.20
STA 306+53.13 TO 307+16

PR SUPERELEVATION
e = 2.2%
SE TRANS - STA 303+69.79 TO STA 307+11.46
STA 319+28.79 TO STA 322+69.88

1. EX AGG SHLD
2. EX ANCHOR BOLT 5/8" DIA
3. EX AREA REFLECTIVE CRACK CONTROL TREATMENT SYSTEM A
4. EX BIT CONC BASE CSE, TY B 3"
5. EX BIT CONC BIND & SURF CSE FINE DENSE - GRADED AGG TY, SUB CLASS I-11 (3")
6. EX BIT CONC BIND CSE 1 1/2"
7. EX BIT CONC BIND CSE 2"
8. EX BIT CONC BIND CSE, TY 2 (1 1/2")
9. EX BIT CONC PAVEMENT 4"
10. EX BIT CONC SHLD 10"
11. EX BIT CONC SHLD 2"
12. EX BIT CONC SHLD 8"
13. EX BIT CONC SURF CSE 2"
14. EX BIT CONC SURF CSE CL I 1 1/2"
15. EX BIT CONC PAVEMENT 6" (ASSUMED)
16. EX BIT CONC SURF CSE 1 1/2"
17. EX BIT CONC SURF CSE MIX E, CL 1, TY 2, 1 1/2"
18. EX BIT CONC SURF CSE, MIX E, CL 1, TY 2, 2"
19. EX BIT SURF 2" DENSE-GRADED AGG TY SUBCLASS B-2
20. EX CCC&G TY B-6.24
21. EX CONC MED TY SM (MODIFIED)
22. EX CONC MED TY 4
23. EX CONC MED TY 4A
24. EX INC BIT CONC SURF 4" W COMB CC&G TY 3 MOD
25. EX LEVELING BIND (MACH METH), TY 2, 1"
26. EX LEVELING BIND VAR THICKNESS
27. EX LEVLEING BIND VAR THICKNESS (MACH METH), (0"-2")
28. EX LEVLEING BIND VAR THICKNESS (MACH METH), (0"-4")
29. EX MED
30. EX PCC BASE CSE 8"
31. EX PCC BASE CSE 9"
32. EX PCC BASE CSE WIDENING 8"
33. EX PCC PVMT 10"
34. EX PCC PVMT 9-6-9
35. EX POLYMERIZED BIT CONC SURF CSE, SUPER E, N70, 1 1/2"
36. EX SOIL CEMENT BASE 6 1/2"
37. EX STABILIZED SHLD 8"
38. EX STABILIZED SUB-BASE 4" (BAM)
39. EX SUB-BASE GRAN MATL 4"
40. EX GRASS MED W/COMB CC&G TY 10
41. EX BIT CONC 3 1/2"
42. EX BIT CONC 4 1/2"

50. PR AGG SHLD, TY B
51. PR BIT CONC BIND CSE 2 1/4"
52. PR BIT BASE CSE SUPERPAVE 6 1/2"
53. PR POLY BIT CONC BIND CSE, SP, IL-19.0, N70 (VAR DEPTH)
54. PR BIT CONC LEVELING BIND 0-1"
55. PR BIT CONC SHLD SP 6 1/2"
56. PR POLY BIT CONC SURF CSE, SP, MIX "E", N70 (1 1/2")
57. PR BIT CONC SHLD SP 1 1/2"
58. PR BIT SHLD REM
59. PR BIT SURF REM, 1 1/2"
60. PR BIT SURF REM, 2"
61. PR COMB CONC C&G, TY B-6.24
62. PR COMB C&G REM
63. PR MED REM
64. PR MED REM PARTIAL DEPTH
65. PR CONC MED, TY SM 4.06
66. PR PCC BASE CSE WIDENING VARIABLE DEPTH
68. PR PVMT REM (SPECIAL)
69. PR PVMT REM
70. PR SLOPED PARKWAY W GRASS
71. PR STORM SEWER 18" TO 24" DIA
72. PR SUBBASE GRAN MATL, TY C 4"
73. PR TOPSOIL 4"
74. PR BIT CONC BASE CSE SP 6"
75. PR BIT CONC BIND CSE 3"
76. PR BIT CONC SURF CSE, SP, MIX "C", N50 (2")

REVISIONS	
NAME	DATE

ILLINOIS DEPARTMENT OF TRANSPORTATION

IL RTE 29

WESLEY RD TO IL RTE 98

TYPICAL SECTIONS

IL RTE 29

SCALE: VERT. HORIZ.

DRAWN BY

DATE

CHECKED BY

PLOT DATE = 4/18/2006
FILE NAME = c:\projects\29peksin\phase.ii\typicals.dgn
PLOT SCALE = 49.9999 ' / IN.
REFERENCE = REF