CONTRACT NO. 88804

F.A.P. RTE.	SECTION	COUNTY	TOTAL SHEETS	SHEET NO.
669	11W-3,RS-8,*	TAZEWELL	442	95
STA.		TO STA.		
FED. ROAD DIST. NO.	ILLINOIS	FED. AID PROJECT		

* 11BR-1, 11BR-2

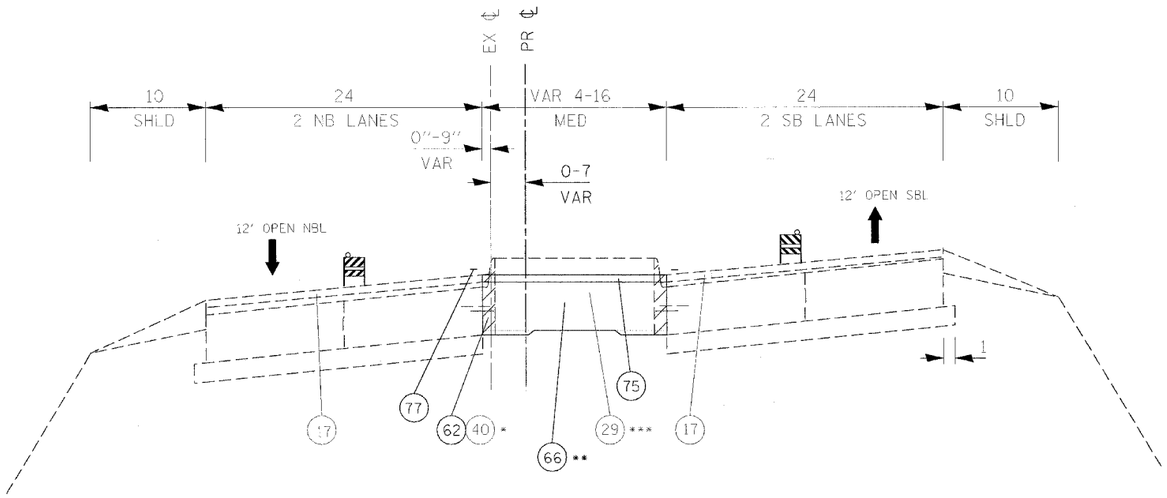

S1-3 SUGGESTED STAGES OF CONSTRUCTION AND TRAFFIC CONTROL TYPICAL SECTION
STAGE 1
IL RTE 29
STA 307+16 TO 320+00

* STA 307+16 TO STA 314+21
STA 314+50 TO STA 315+75
STA 317+86 TO STA 320+00

** PR PCC BASE CSE WIDENING (VARIABLE DEPTH)
STA 307+16 TO STA 314+22
STA 314+50 TO STA 315+75
STA 317+86 TO STA 320+00

*** EX MEDIAN
10" PCC PVMT & 2-½" BIT SURF
STA 314+21 TO STA 314+50,
STA 317+20 TO STA 317+86
EX ABANDONED RR CROSSING W 13" BIT PVMT
STA 315+75 TO STA 317+20
EX GRASS MED W/COMB CC&G TY 10
STA 307+16 TO 314+21
STA 314+50 TO 315+75
STA 317+86 TO 320+00

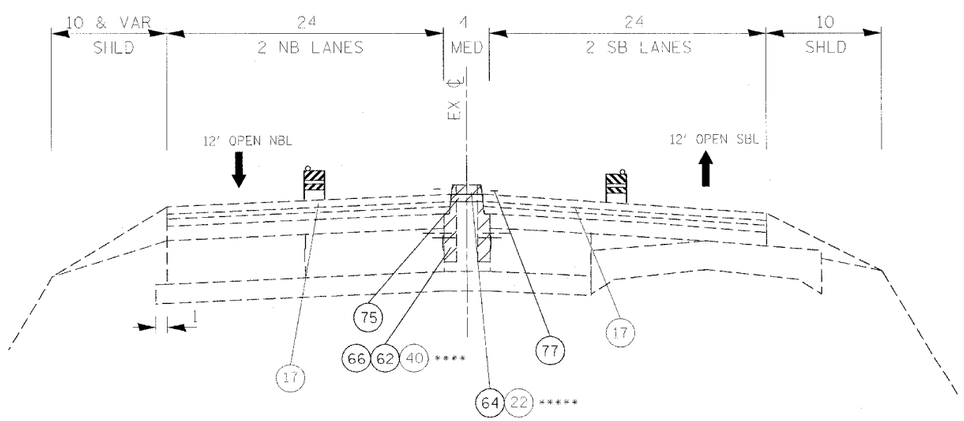

S1-4 SUGGESTED STAGES OF CONSTRUCTION AND TRAFFIC CONTROL TYPICAL SECTION
STAGE 1
IL RTE 29
STA 320+00 TO 329+60

**** STA 320+00 TO STA 321+31

***** STA 321+31 TO STA 329+60

SYMBOLS

REMOVAL ITEM

1. EX AGG SHLD
2. EX ANCHOR BOLT ⅝" DIA
3. EX AREA REFLECTIVE CRACK CONTROL TREATMENT SYSTEM A
4. EX BIT CONC BASE CSE, TY B 3"
5. EX BIT CONC BIND & SURF CSE FINE DENSE - GRADED AGG TY, SUB CLASS I-11 (3")
6. EX BIT CONC BIND CSE 1½"
7. EX BIT CONC BIND CSE 2"
8. EX BIT CONC BIND CSE, TY 2 (1½")
9. EX BIT CONC PAVEMENT 4"
10. EX BIT CONC SHLD 10"
11. EX BIT CONC SHLD 2"
12. EX BIT CONC SHLD 8"
13. EX BIT CONC SURF CSE 2"
14. EX BIT CONC SURF CSE CL I 1½"
15. EX BIT CONC PAVEMENT 6" (ASSUMED)
16. EX BIT CONC SURF CSE 1½"
17. EX BIT CONC SURF CSE MIX E, CL 1, TY 2, 1½"
18. EX BIT CONC SURF CSE, MIX E, CL 1, TY 2, 2"
19. EX BIT SURF 2" DENSE-GRADED AGG TY SUBCLASS B-2
20. EX CCC&G TY B-6.24
21. EX CONC MED TY SM (MODIFIED)
22. EX CONC MED TY 4
23. EX CONC MED TY 4A
24. EX INC BIT CONC SURF 4" W COMB CC&G TY 3 MOD
25. EX LEVELING BIND (MACH METH), TY 2, 1"
26. EX LEVELING BIND VAR THICKNESS
27. EX LEVLEING BIND VAR THICKNESS (MACH METH), (0"-2")
28. EX LEVLEING BIND VAR THICKNESS (MACH METH), (0"-4")
29. EX MED
30. EX PCC BASE CSE 8"
31. EX PCC BASE CSE 9"
32. EX PCC BASE CSE WIDENING 8"
33. EX PCC PVMT 10"
34. EX PCC PVMT 9 6-9
35. EX POLYMERIZED BIT CONC SURF CSE, SUPER E, N70, 1½"
36. EX SOIL CEMENT BASE 6½"
37. EX STABILIZED SHLD 8"
38. EX STABILIZED SUB-BASE 4" (BAM)
39. EX SUB-BASE GRAN MATL 4"
40. EX GRASS MED W/COMB CC&G TY 10
41. EX BIT CONC 3½"
42. EX BIT CONC 4½"

50. PR AGG SHLD, TY B
51. PR BIT CONC BIND CSE 2¼"
52. PR BIT BASE CSE SUPERPAVE 6½"
53. PR POLY BIT CONC BIND CSE, SP, IL-19.0, N70 (VAR DEPTH)
54. PR BIT CONC LEVELING BIND 0-1"
55. PR BIT CONC SHLD SP 6½"
56. PR POLY BIT CONC SURF CSE, SP, MIX "E", N70 (1½")
57. PR BIT CONC SHLD SP 1½"
58. PR BIT SHLD REM
59. PR BIT SURF REM, 1½"
60. PR BIT SURF REM, 2"
61. PR COMB CONC C&G, TY B-6.24
62. PR COMB C&G REM
63. PR MED REM
64. PR MED REM PARTIAL DEPTH
65. PR CONC MED, TY SM 4.06
66. PR PCC BASE CSE WIDENING VARIABLE DEPTH
68. PR PVMT REM (SPECIAL)
69. PR PVMT REM
70. PR SLOPED PARKWAY W GRASS
71. PR STORM SEWER 18" TO 24" DIA
72. PR SUBBASE GRAN MATL, TY C 4"
73. PR TOPSOIL 4"
74. PR BIT CONC BASE CSE SP 6"
75. PR BIT CONC BIND CSE 3"
76. PR BIT CONC SURF CSE, SP, MIX "C", N50 (2")
77. PR TEMP PVMT MARKING - LINE 4"

REVISIONS	
NAME	DATE

ILLINOIS DEPARTMENT OF TRANSPORTATION
IL RTE 29
WESLEY RD TO IL RTE 98
SUGGESTED STAGES OF CONSTRUCTION
AND TRAFFIC CONTROL
STAGE 1A & 1B TYPICAL SECTIONS

SCALE: VERT. / HORIZ. NOT TO SCALE
DRAWN BY
DATE
CHECKED BY

PLOT DATE = 4/18/2006
FILE NAME = c:\projects\2hnpaker\phase_II\typical_staging.dgn
PLOT SCALE = 1960.5800 ' / M.
REFERENCE = MGE