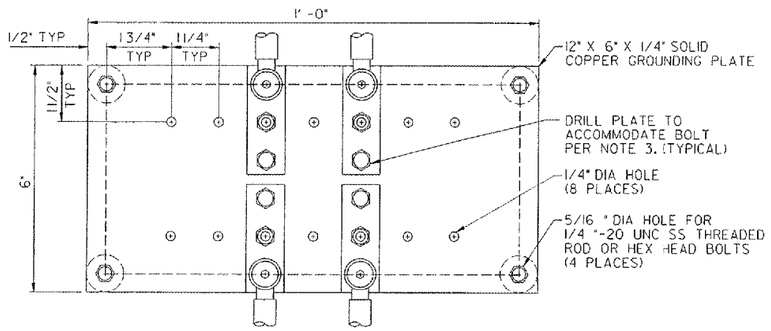

PLAN
COPPER GROUNDING PLATE
1 DETAIL
NOT TO SCALE

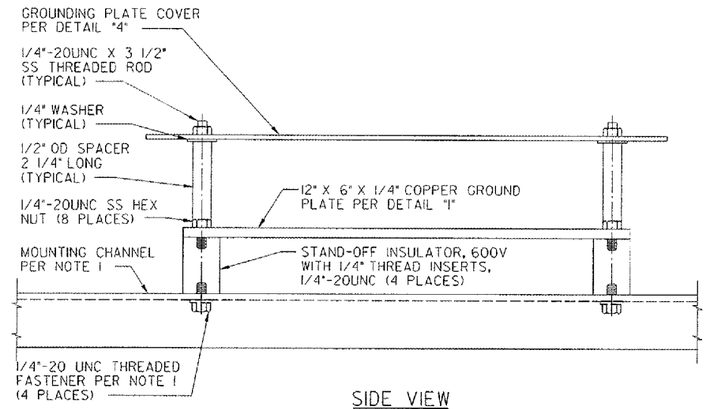

SIDE VIEW
GROUNDING PLATE ASSEMBLY
2 DETAIL
NOT TO SCALE

NOTES:

1. P1000 GALVANIZED UNISTRUT CHANNEL SHALL BE USED TO SECURE THE STAND-OFF INSULATORS TO THE WALL.
2. GRS CONDUITS SHALL BE INSTALLED WITH GROUNDING BUSHINGS AT EACH END INTER-CONNECTED USING A 6 AWG BARE COPPER GROUNDING CONDUCTOR. CONNECT CONDUCTOR TO A GROUNDING ROD USING AN EXOTHERMIC WELD.
3. TWO-BOLT CONNECTORS WITH SILICON BRONZE 3/8"-16 UNC X 11/2" HEX HEAD BOLT, NUT, AND LOCK WASHER ARE REQUIRED FOR ALL CONDUCTORS TO BE CONNECTED TO THE GROUNDING PLATES. ONE-BOLT CONNECTORS ARE NOT ACCEPTABLE. NOTE THAT ONLY ONE OF THE HOLES REQUIRED FOR INSTALLING EACH 2-BOLT CONNECTOR IS SPECIFIED IN DETAIL "1". THE INSTALLER OF THE CONNECTOR SHALL DRILL THE SECOND HOLE TO MATCH THE BOLT PATTERN OF THE SELECTED CONNECTOR.
4. GROUNDING PLATES AND COVERS FOR HIGH ENERGY GROUNDING PLATE AND MULTI-POINT GROUNDING PLATES ARE CONSTRUCTED IDENTICALLY TO THE MAIN GROUNDING PLATE WITH THE EXCEPTION THAT THE COVER SHOULD BE LABELLED "HIGH ENERGY GROUNDING PLATE" AND "MULTI-POINT GROUNDING PLATE" INSTEAD OF "MAIN GROUNDING PLATE". SEE DWG ARR-D-L0C04-A01 FOR GROUNDING PLATE TYPE AND LOCATION DETAILS.
5. CONDUIT SHALL BE INSTALLED ON THE INSIDE WALL FOR NEW SHELTER CONSTRUCTION. WHEN INSTALLED ON INSIDE WALL, EXPANSION COUPLING AND LB ARE NOT REQUIRED.

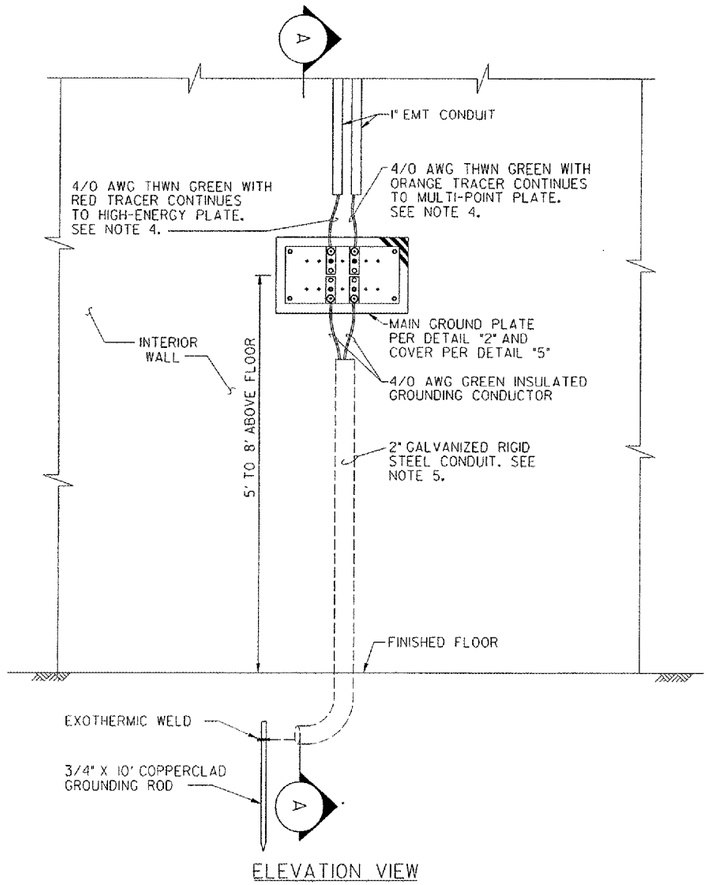

ELEVATION VIEW
MAIN GROUNDING PLATE INSTALLATION
3 DETAIL
NOT TO SCALE

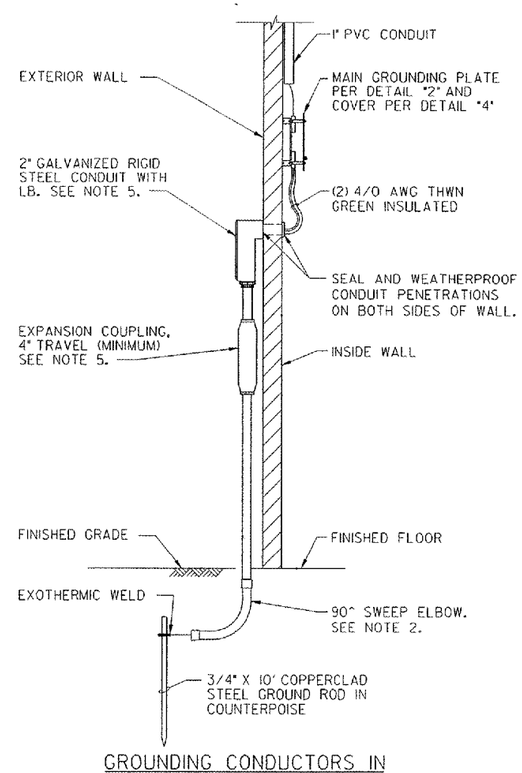

GROUNDING CONDUCTORS IN
CONDUIT ON OUTSIDE WALL
A SECTION
NOT TO SCALE

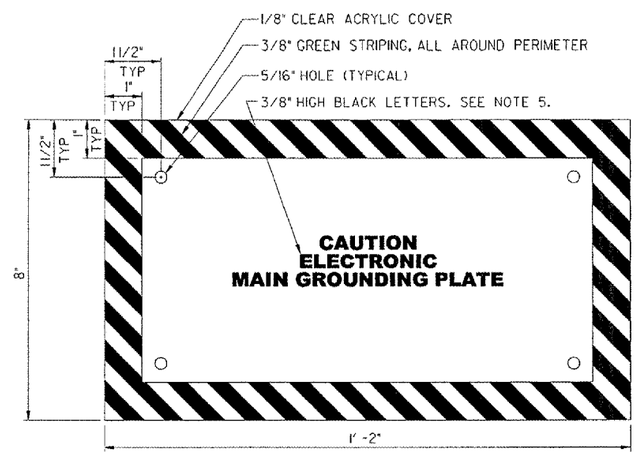

TYPICAL PLASTIC COVER
FOR GROUNDING PLATES
4 DETAIL
NOT TO SCALE

SHEET 67 OF 67

DEPARTMENT OF TRANSPORTATION
FEDERAL AVIATION ADMINISTRATION
GREAT LAKES REGION — CHICAGO, ILLINOIS

LOCALIZER

GROUNDING PLATE AND COVER DETAILS
RUNWAY 9

AURORA — AURORA MUNICIPAL AIRPORT — IL

REV	DATE	DESCRIPTION	JCN	REDLINE DATE	APVD

REVIEWED BY	SUBMITTED BY	APPROVED BY
	PROJ ENGR, TIMOTHY DYER	PLATFORM MGR, CLELAND MICHEEL
DESIGNED TAD	ISSUED BY CHICAGO NAS IMPLEMENTATION CENTER	DATE 05/03/2006 JCN
DRAWN TAD		DRAWING NO ARR-D-L0C09-E01 REV
CHECKED EDS		

J:\Aurora\b1042850\Dwgs\Sheets\FAA ILS GDPs, Cat mod, 5-10-06\ARR-D-L0C09-E01.dgn 5/10/2006 3:14:05 PM SHAUER