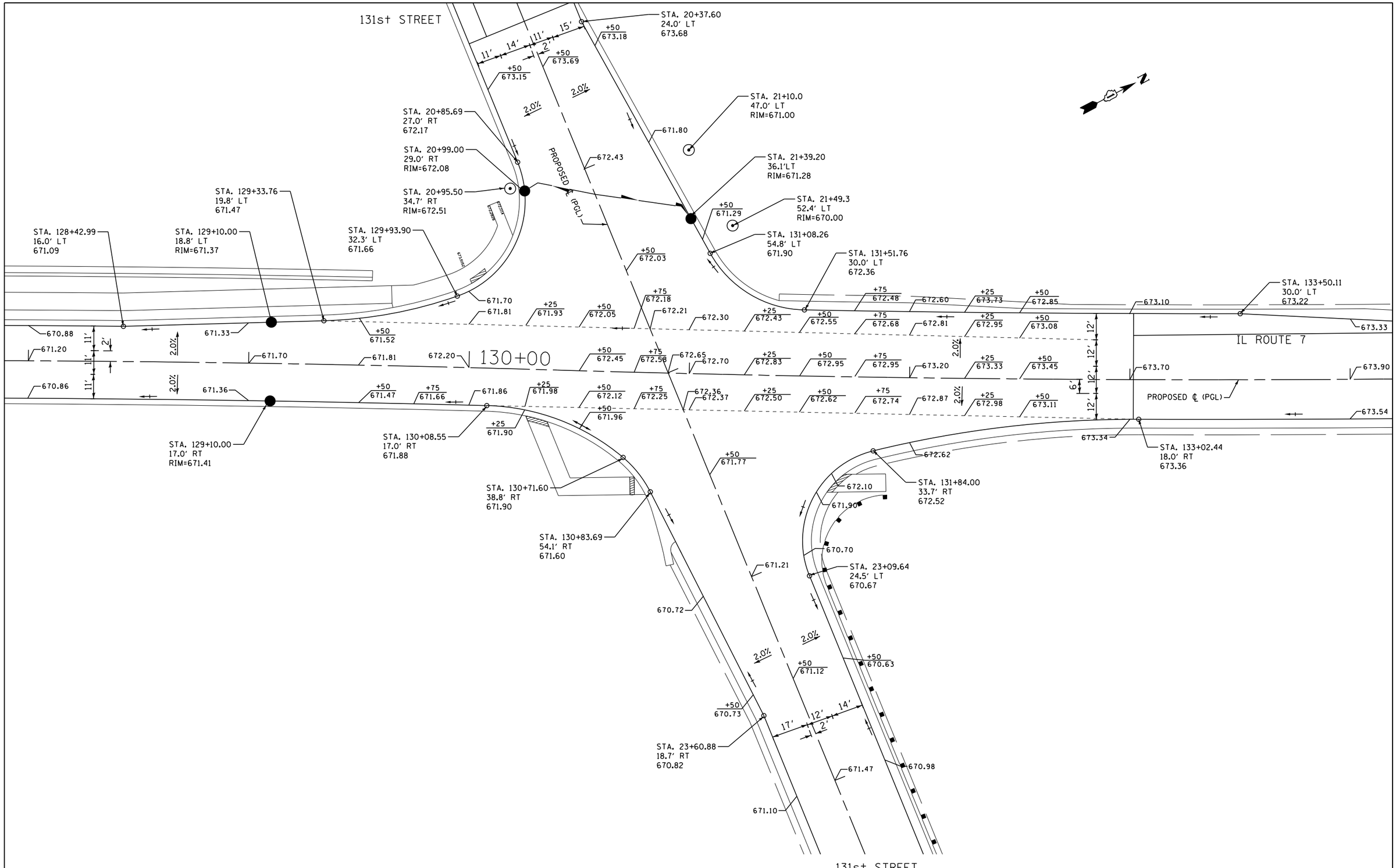

FILE NAME = $FILEL$	USER NAME = $USER$	DESIGNED - JY	REVISED -	STATE OF ILLINOIS DEPARTMENT OF TRANSPORTATION	INTERSECTION DETAILS IL ROUTE 7 AND 131st STREET	F.A.U. RTE.	SECTION	COUNTY	TOTAL SHEETS	SHEET NO.
		DRAWN - SMP	REVISED -			3578	2019-001-R	COOK	255	101
	PLOT SCALE = $SCALE$	CHECKED - BLG	REVISED -					CONTRACT NO. 62H82		
$MODELNAME$	PLOT DATE = $DATE$	DATE - 12/09/2022	REVISED -		SCALE: 1"=20' SHEET OF SHEETS STA. TO STA.		ILLINOIS FED. AID PROJECT			

ADA DETAIL FOR SINGLE PERPENDICULAR CURB RAMPS W/ EXIST. 5% OR LESS RUN. SLOPE

PD–01A

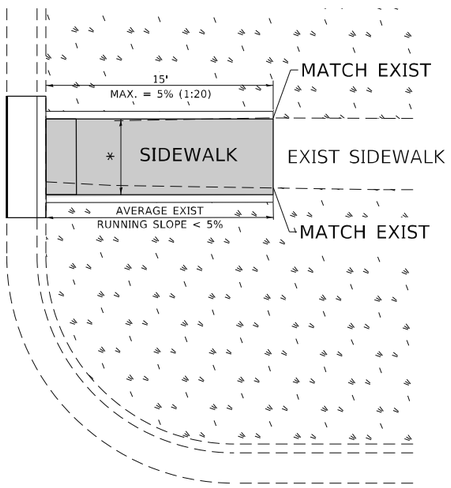

PD–01B

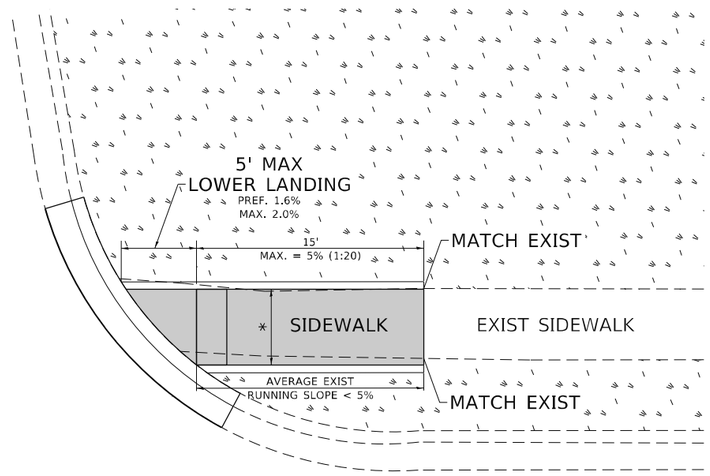

PD–01C

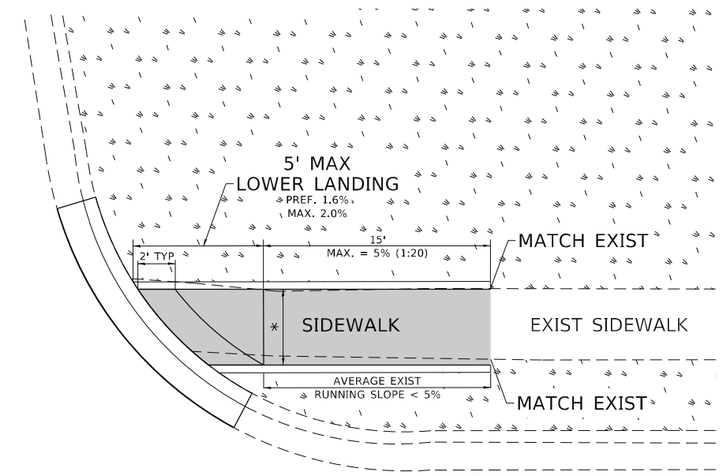

LEGEND

PROPOSED SIDE CURB

EXIST. GRASS

PROPOSED SIDEWALK

DETECTABLE WARNINGS

CONSTRUCTION NOTES:

1) ALL CROSS SLOPES ARE PREFERRED 1.6% (1:64), MAXIMUM 2% (1:50) EXCEPT WHEN TRANSITIONING TO EXISTING SIDEWALK

* MATCH EXISTING SIDEWALK WIDTH

USER NAME = gaglianobt	DESIGNED -	REVISED -
	DRAWN - R. LEDEZMA	REVISED -
PLOT SCALE = 100.0000 ' / in.	CHECKED -	REVISED -
PLOT DATE = 11/19/2019	DATE - 10/02/2019	REVISED -

STATE OF ILLINOIS
DEPARTMENT OF TRANSPORTATION

PROJECT DETAIL FOR SINGLE PERPENDICULAR CURB RAMPS
(PD–01)

SCALE: NONE | SHEET OF SHEETS | STA. TO STA.

F.A.U. RTE.	SECTION	COUNTY	TOTAL SHEETS	SHEET NO.
3578	2019-001-R	COOK	255	102
	PD-01	CONTRACT NO. 62H82		
	ILLINOIS	FED. AID PROJECT		

MODEL: Default
FILE NAME: pw:\\dannoom.dot.illinois.gov:PWIDOT\Documents\IDOT Offices\District 1\Projects\BrsStd22-23\CADData\CADsheets\pcd01.dgn

ADA DETAIL FOR SINGLE PERPENDICULAR CURB RAMPS W/ EXIST. 5% OR GREATER RUN. SLOPE

PD–02A

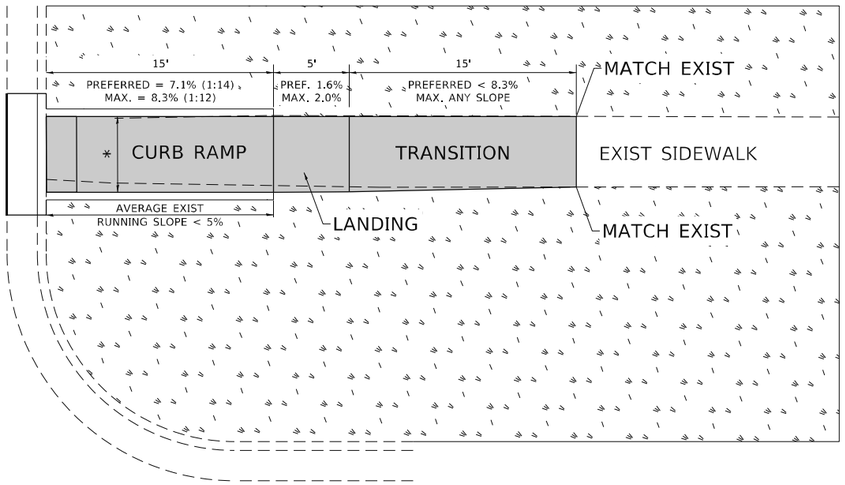

PD–02B

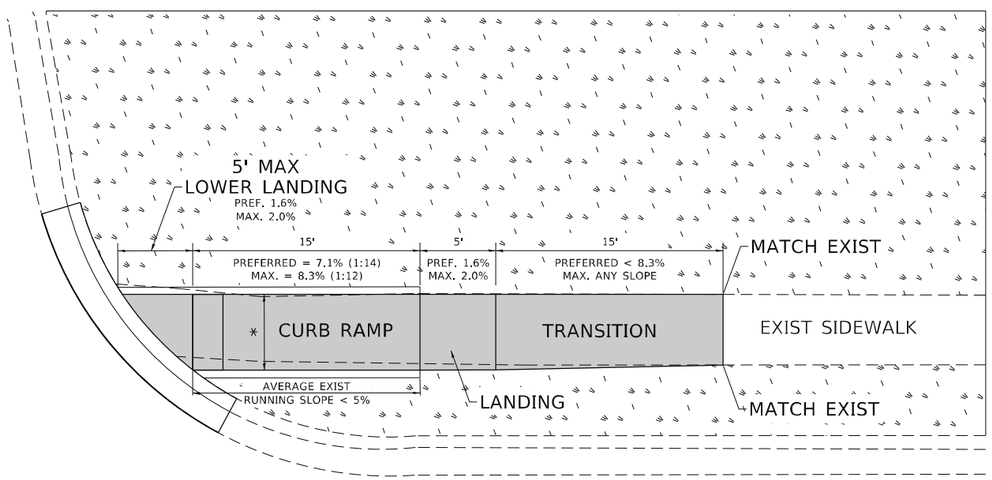

PD–02C

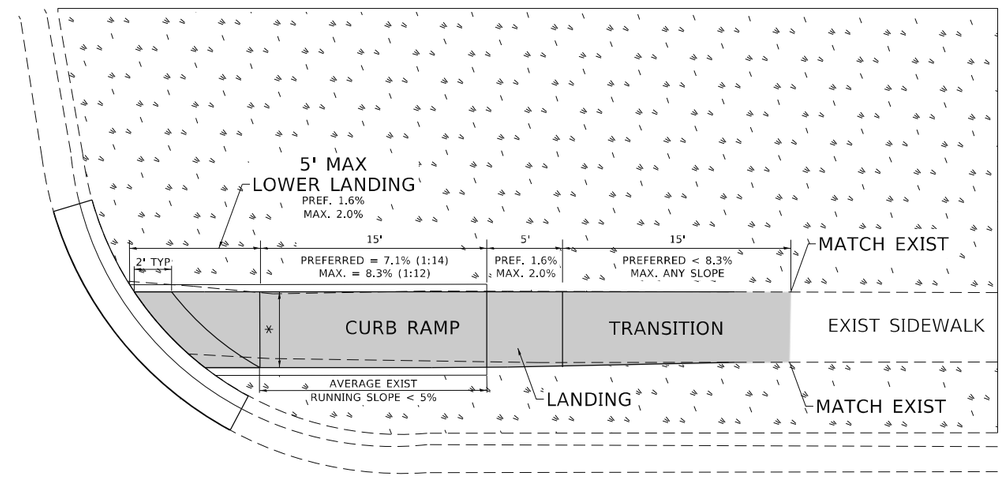

LEGEND

PROPOSED SIDE CURB

EXIST. GRASS

PROPOSED SIDEWALK

DETECTABLE WARNINGS

CONSTRUCTION NOTES:

1) ALL CROSS SLOPES ARE PREFERRED 1.6% (1:64), MAXIMUM 2% (1:50) EXCEPT WHEN TRANSITIONING TO EXISTING SIDEWALK

* MATCH EXISTING SIDEWALK WIDTH

USER NAME = gaglianobt	DESIGNED -	REVISED -
	DRAWN - R. LEDEZMA	REVISED -
PLOT SCALE = 100.0000 ' / in.	CHECKED -	REVISED -
PLOT DATE = 11/19/2019	DATE - 10/02/2019	REVISED -

STATE OF ILLINOIS
DEPARTMENT OF TRANSPORTATION

PROJECT DETAIL FOR SINGLE PERPENDICULAR CURB RAMPS (PD–02)

SCALE: NONE | SHEET OF SHEETS | STA. TO STA.

F.A.U. RTE.	SECTION	COUNTY	TOTAL SHEETS	SHEET NO.
3578	2019-001-R	COOK	255	103
	PD-02	CONTRACT NO. 62H82		
	ILLINOIS	FED. AID PROJECT		

MODEL: Default
FILE NAME: pw:\\dhanoom.dot.illinois.gov:PWIDOT\Documents\IDOT Offices\District 1\Projects\DistStd22-23\CAD\Data\CAD\sheet\std01.dgn

ADA DETAIL FOR DOUBLE PERPENDICULAR CURB RAMPS

PD–03A

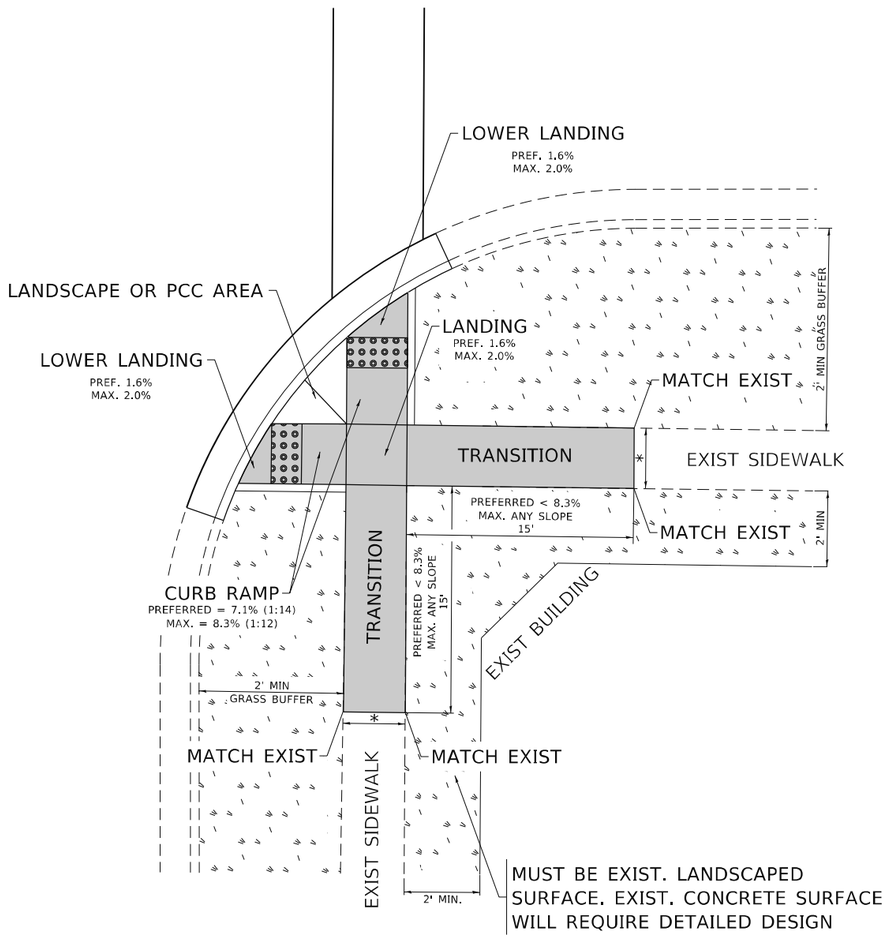

PD–03B

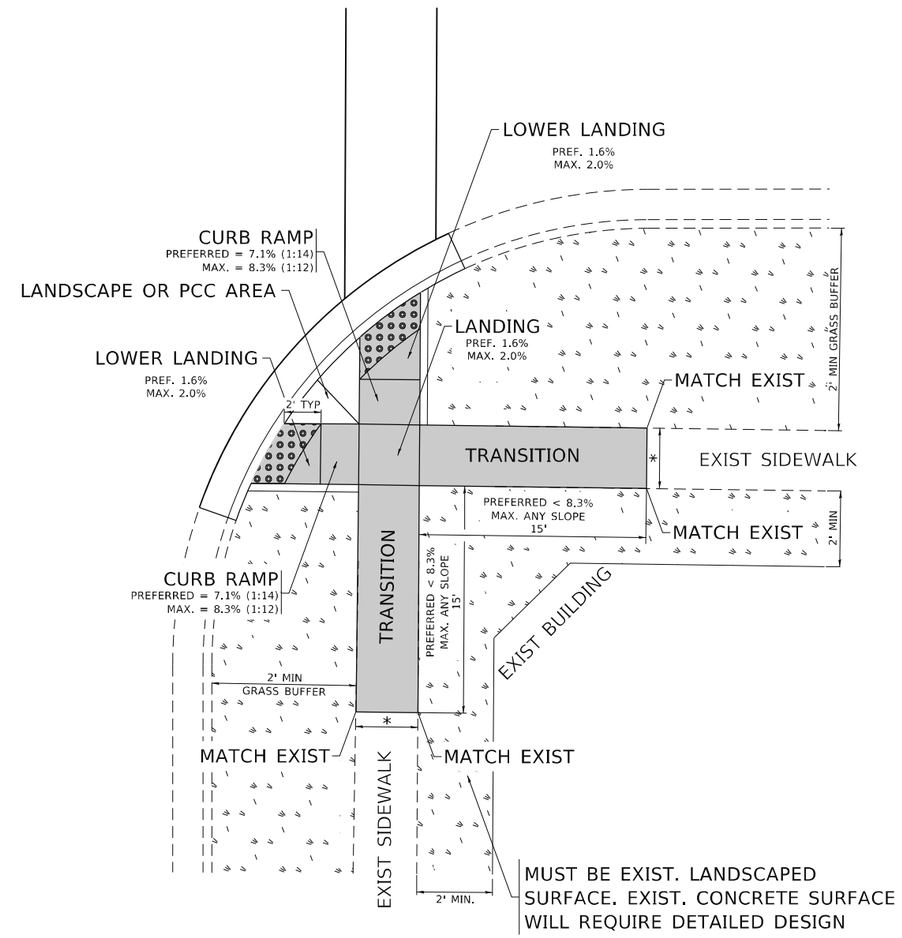

LEGEND

PROPOSED SIDE CURB

EXIST. GRASS

PROPOSED SIDEWALK

DETECTABLE WARNINGS

CONSTRUCTION NOTES:

1) ALL CROSS SLOPES ARE PREFERRED 1.6% (1:64), MAXIMUM 2% (1:50) EXCEPT WHEN TRANSITIONING TO EXISTING SIDEWALK

* MATCH EXISTING SIDEWALK WIDTH

USER NAME = gaglianobt	DESIGNED -	REVISED -
	DRAWN - R. LEDEZMA	REVISED -
PLOT SCALE = 100.0000 ' / in.	CHECKED -	REVISED -
PLOT DATE = 11/19/2019	DATE - 10/02/2019	REVISED -

STATE OF ILLINOIS
DEPARTMENT OF TRANSPORTATION

PROJECT DETAIL FOR SINGLE PERPENDICULAR CURB RAMPS
(PD–03)

SCALE: NONE | SHEET OF SHEETS | STA. TO STA.

F.A.U. RTE.	SECTION	COUNTY	TOTAL SHEETS	SHEET NO.
3578	2019-001-R	COOK	255	104
	PD-03	CONTRACT NO. 62H82		
	ILLINOIS	FED. AID PROJECT		

MODE: Default
FILE NAME: pw:\\dimrpwn.dot.illinois.gov:PWIDOT\Documents\IDOT Offices\District 1\Projects\District\22-31\CAD\Data\CADsheets\pd01.dgn

ADA DETAIL FOR SINGLE PERPENDICULAR CURB RAMPS W/ TURNING SPACE

PD–04A

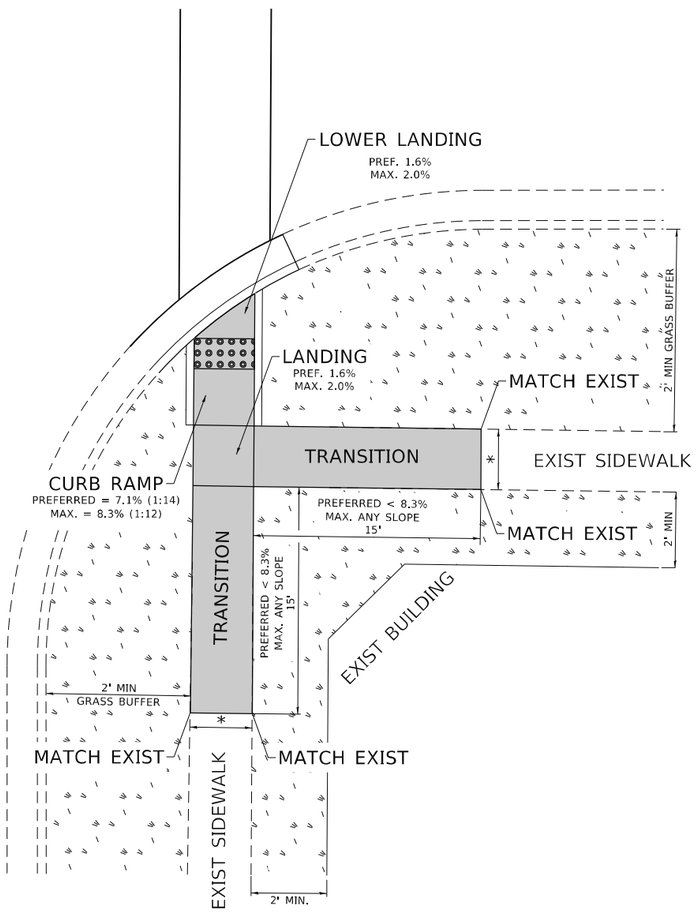

PD–04B

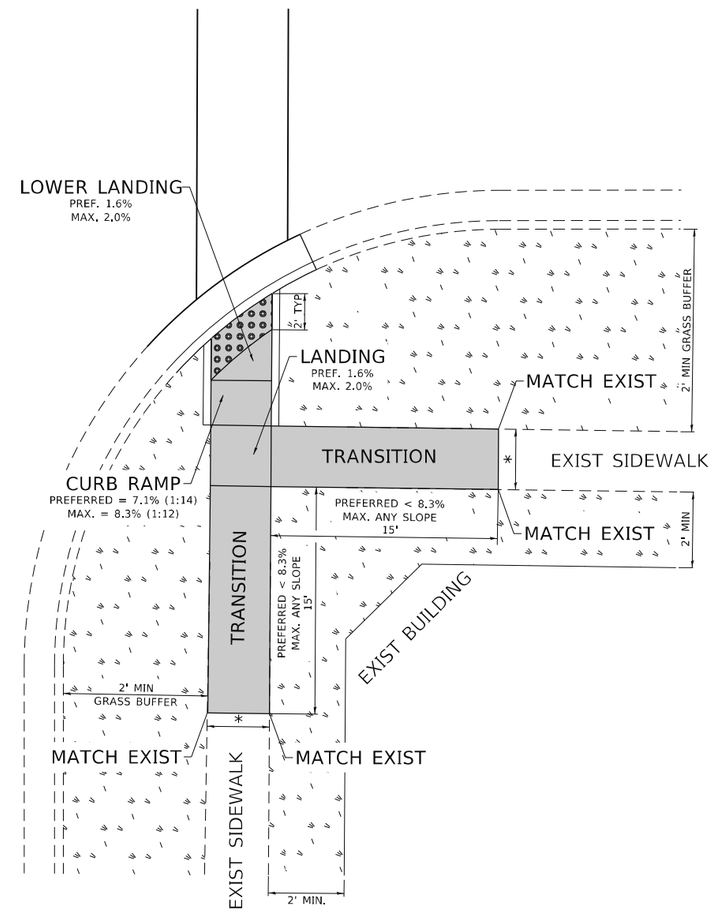

LEGEND

PROPOSED SIDE CURB

EXIST. GRASS

PROPOSED SIDEWALK

DETECTABLE WARNINGS

CONSTRUCTION NOTES:

1) ALL CROSS SLOPES ARE PREFERRED 1.6% (1:64), MAXIMUM 2% (1:50) EXCEPT WHEN TRANSITIONING TO EXISTING SIDEWALK

* MATCH EXISTING SIDEWALK WIDTH

USER NAME = gaglianobt	DESIGNED -	REVISED -
	DRAWN - R. LEDEZMA	REVISED -
PLOT SCALE = 100.0000 ' / in.	CHECKED -	REVISED -
PLOT DATE = 11/19/2019	DATE - 10/02/2019	REVISED -

STATE OF ILLINOIS
DEPARTMENT OF TRANSPORTATION

PROJECT DETAIL FOR SINGLE PERPENDICULAR CURB RAMPS
(PD–04)

SCALE: NONE | SHEET OF SHEETS | STA. TO STA.

F.A.U. RTE.	SECTION	COUNTY	TOTAL SHEETS	SHEET NO.
3578	2019-001-R	COOK	255	105
	PD-04	CONTRACT NO. 62H82		
		ILLINOIS	FED. AID PROJECT	

MODEL: Default
FILE NAME: pw:\\dotnxroom.dot.illinois.gov:PWIDOT\Documents\IDOT Offices\District 1\Projects\DistStd22234\CADData\CADsheets\pd01.dgn

ADA DETAIL FOR DEPRESSED CORNER CURB RAMPS

PD–05A

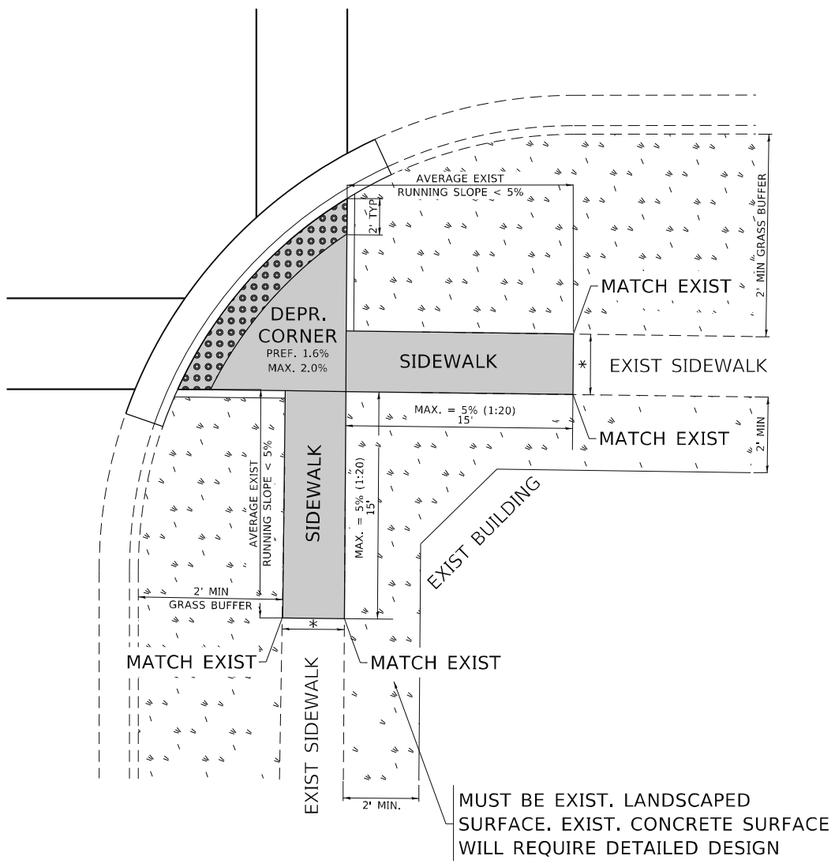

PD–05B

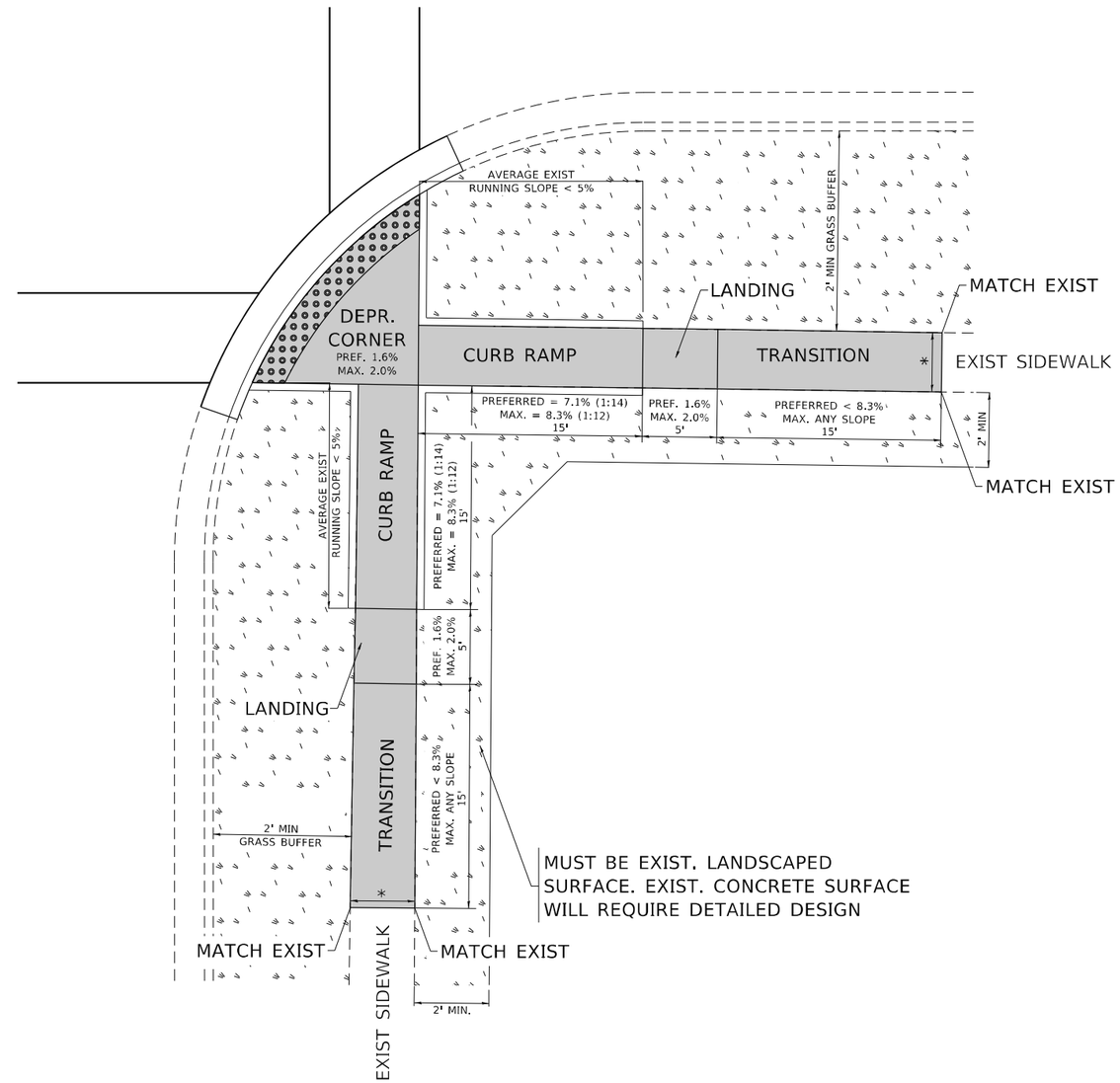

LEGEND

PROPOSED SIDE CURB

EXIST. GRASS

PROPOSED SIDEWALK

DETECTABLE WARNINGS

CONSTRUCTION NOTES:

1) ALL CROSS SLOPES ARE PREFERRED 1.6% (1:64), MAXIMUM 2% (1:50) EXCEPT WHEN TRANSITIONING TO EXISTING SIDEWALK

* MATCH EXISTING SIDEWALK WIDTH

USER NAME = gaglianobt	DESIGNED -	REVISED -
	DRAWN - R. LEDEZMA	REVISED -
PLOT SCALE = 100.0000 ' / in.	CHECKED -	REVISED -
PLOT DATE = 11/19/2019	DATE - 10/02/2019	REVISED -

STATE OF ILLINOIS
DEPARTMENT OF TRANSPORTATION

PROJECT DETAIL FOR SINGLE PERPENDICULAR CURB RAMPS
(PD–05)

SCALE: NONE | SHEET OF SHEETS | STA. TO STA.

F.A.U. RTE.	SECTION	COUNTY	TOTAL SHEETS	SHEET NO.
3578	2019-001-R	COOK	255	106
	PD-05	CONTRACT NO. 62H82		
	ILLINOIS	FED. AID PROJECT		

MODEL: Default
FILE NAME: pw:\\dannoam.dot.illinois.gov:PWIDOT\Documents\IDOT Offices\District 1\Projects\District\22-31\CAD\Data\CAD\sheet\pd01.dgn

ADA DETAIL FOR DEPRESSED CORNER CURB RAMPS

PD–06A

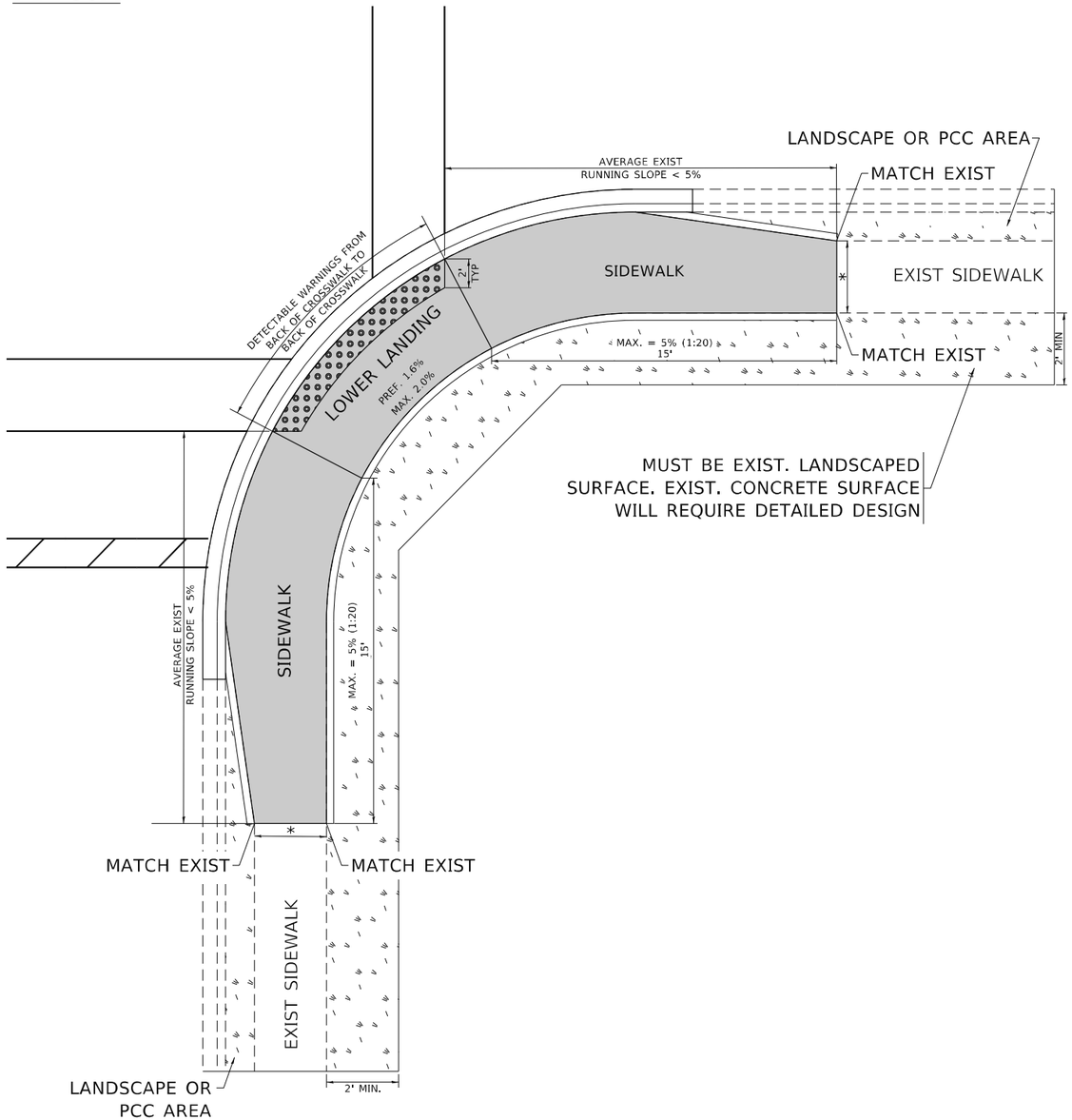

PD–06B

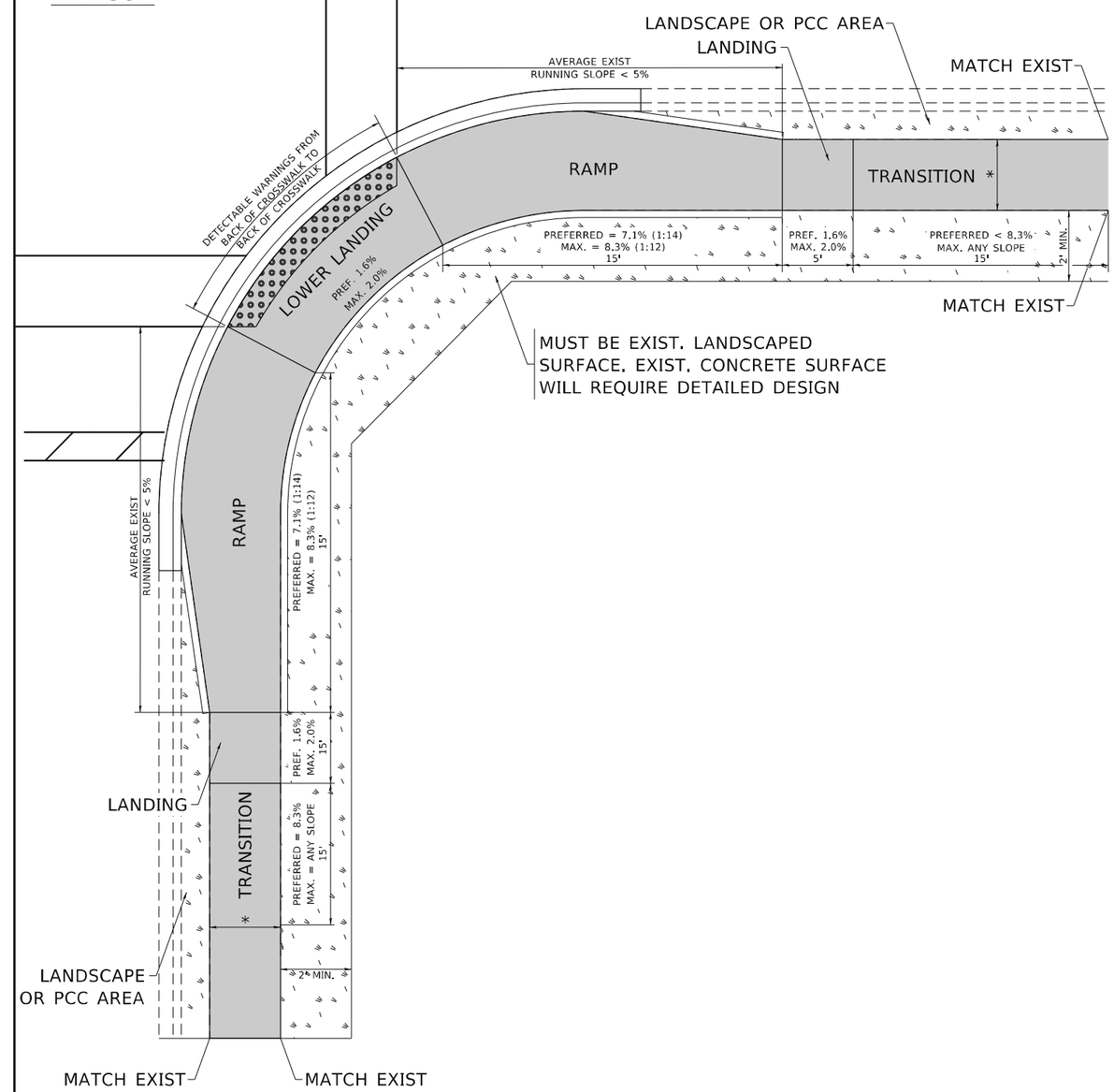

LEGEND

PROPOSED SIDE CURB

EXIST. GRASS

PROPOSED SIDEWALK

DETECTABLE WARNINGS

CONSTRUCTION NOTES:

1) ALL CROSS SLOPES ARE PREFERRED 1.6% (1:64), MAXIMUM 2% (1:50) EXCEPT WHEN TRANSITIONING TO EXISTING SIDEWALK

* MATCH EXISTING SIDEWALK WIDTH

MODEL: Default
FILE NAME: pw:\\dhanoam.dot.illinois.gov:PWIDOT\Documents\IDOT Offices\District 1\Projects\DistStd22-31\CAD\Data\CADsheet\pd06.dgn

USER NAME = gaglianobt	DESIGNED -	REVISED -	
	DRAWN - R. LEDEZMA	REVISED -	
PLOT SCALE = 100.0000 ' / in.	CHECKED -	REVISED -	
PLOT DATE = 11/19/2019	DATE - 10/02/2019	REVISED -	

STATE OF ILLINOIS
DEPARTMENT OF TRANSPORTATION

PROJECT DETAIL FOR SINGLE PERPENDICULAR CURB RAMPS
(PD–06)

SCALE: NONE | SHEET OF SHEETS | STA. TO STA.

F.A.U. RTE.	SECTION	COUNTY	TOTAL SHEETS	SHEET NO.
3578	2019-001-R	COOK	255	107
	PD-06	CONTRACT NO. 62H82		
	ILLINOIS	FED. AID PROJECT		

NOTE:

1) ALL FINAL PAVEMENT MARKING MATERIALS AT IL-7 AND 131ST STREET SHALL BE THERMOPLASTIC ON HOT-MIX ASPHALT. ALL FINAL PAVEMENT MARKING MATERIALS AT 135TH STREET SHALL BE URETHANE ON HOT-MIX ASPHALT.

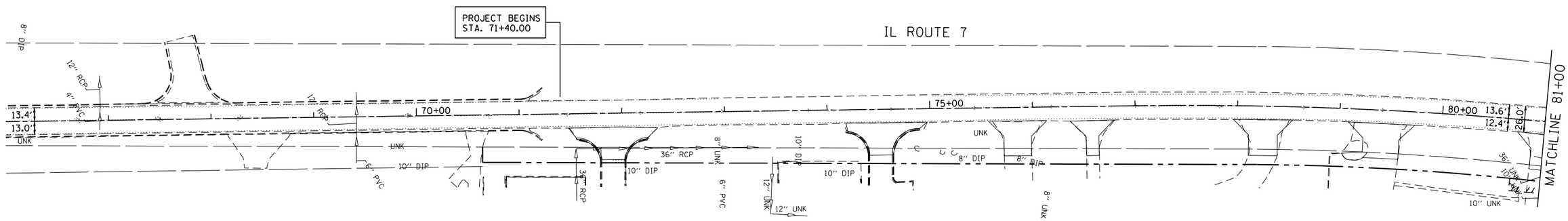

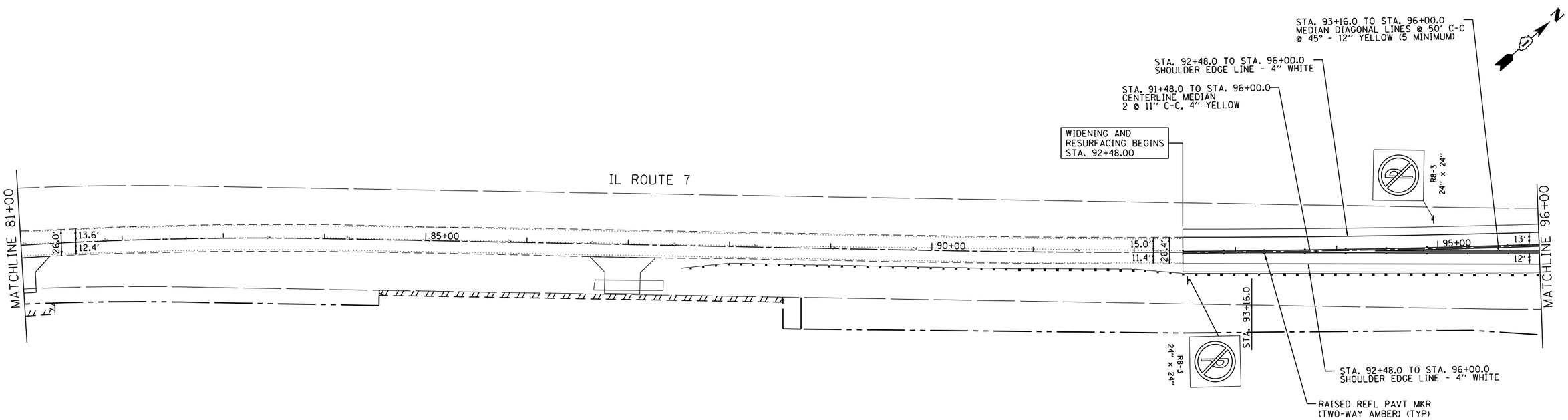

JAMES J. BENES & ASSOCIATES CONSULTING ENGINEERS 1011 WARRENVILLE ROAD, SUITE 420 LISLE, IL 60532 (630) 719-7570	USER NAME = $USER$	DESIGNED - BLG	REVISED -	STATE OF ILLINOIS DEPARTMENT OF TRANSPORTATION	PAVEMENT MARKING AND SIGNAGE PLAN	F.A.U. RTE.	SECTION	COUNTY	TOTAL SHEETS / SHEET NO.
		DRAWN - JY	REVISED -			3578	2019-001-R	COOK	255 / 108
	PLOT SCALE = $SCALE$	CHECKED - BDH	REVISED -					CONTRACT NO. 62H82	
	PLOT DATE = $DATE$	DATE - 12/09/2022	REVISED -		SCALE: 1"=50' / SHEET OF SHEETS / STA. 71+40 TO STA. 96+00		ILLINOIS FED. AID PROJECT		

NOTE:

1) ALL FINAL PAVEMENT MARKING MATERIALS AT IL-7 AND 131ST STREET SHALL BE THERMOPLASTIC ON HOT-MIX ASPHALT. ALL FINAL PAVEMENT MARKING MATERIALS AT 135TH STREET SHALL BE URETHANE ON HOT-MIX ASPHALT.

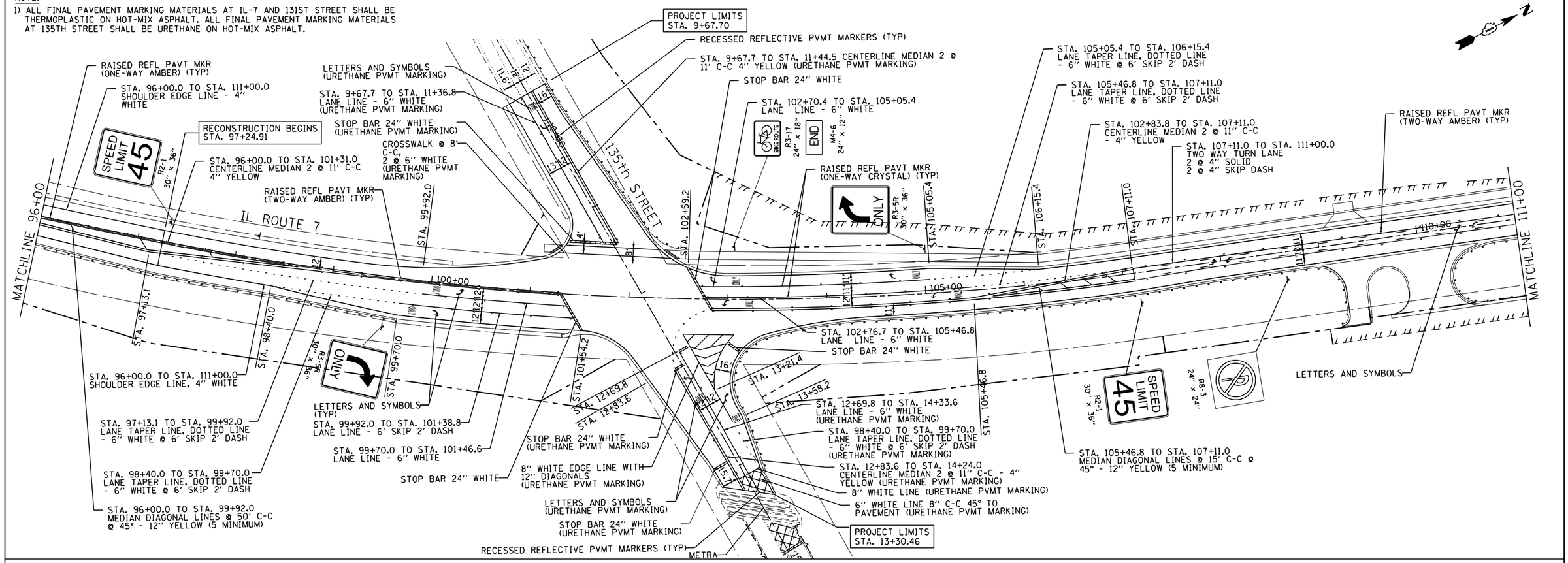

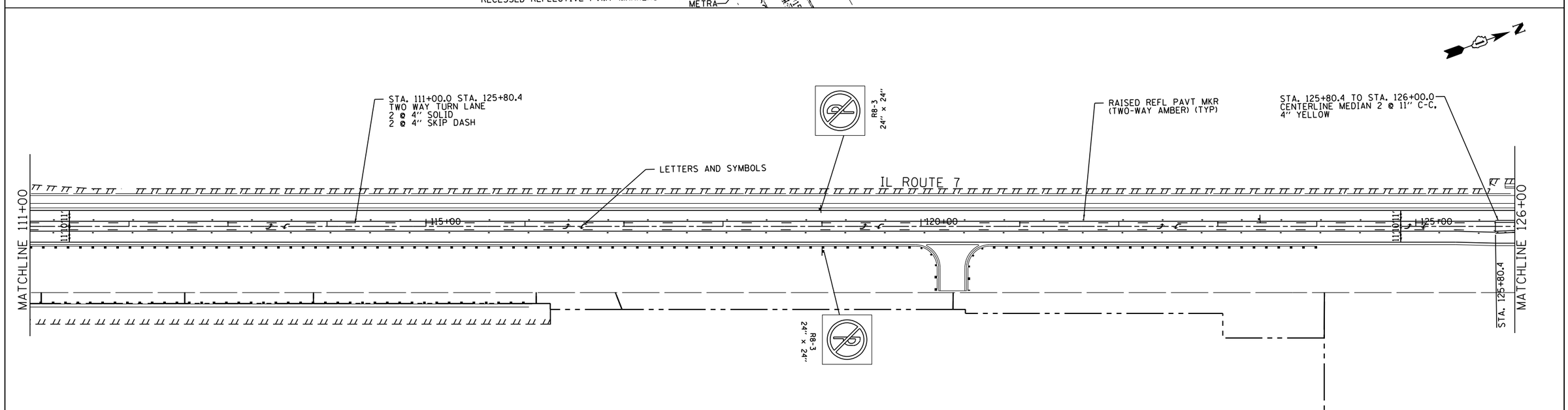

JAMES J. BENES & ASSOCIATES CONSULTING ENGINEERS 1011 WARRENVILLE ROAD, SUITE 420 LISLE, IL 60532 (630) 719-7570	USER NAME = $USER$	DESIGNED - BLG	REVISED -	STATE OF ILLINOIS DEPARTMENT OF TRANSPORTATION	PAVEMENT MARKING AND SIGNAGE PLAN	F.A.U. RTE.	SECTION	COUNTY	TOTAL SHEETS / SHEET NO.
		DRAWN - JY	REVISED -			3578	2019-001-R	COOK	255 / 109
	PLOT SCALE = $SCALE$	CHECKED - BDH	REVISED -					CONTRACT NO. 62H82	
	PLOT DATE = $DATE$	DATE - 12/09/2022	REVISED -		SCALE: 1"=50' / SHEET OF SHEETS / STA. 96+00 TO STA. 126+00		ILLINOIS FED. AID PROJECT		

NOTE:

1) ALL FINAL PAVEMENT MARKING MATERIALS AT IL-7 AND 131ST STREET SHALL BE THERMOPLASTIC ON HOT-MIX ASPHALT. ALL FINAL PAVEMENT MARKING MATERIALS AT 135TH STREET SHALL BE URETHANE ON HOT-MIX ASPHALT.

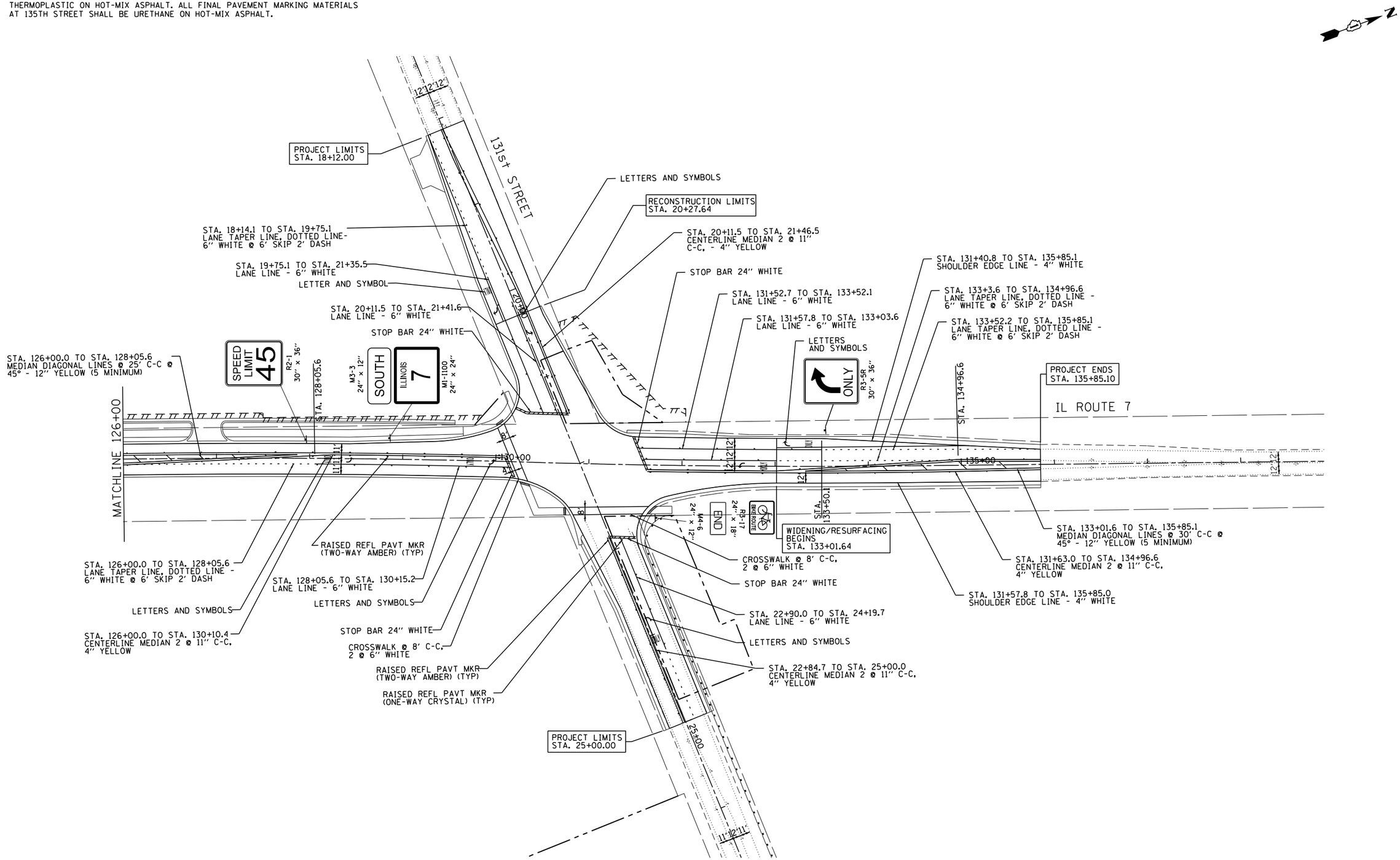

JJB JAMES J. BENES & ASSOCIATES CONSULTING ENGINEERS 1011 WARRENVILLE ROAD, SUITE 420 LISLE, IL 60532 (630) 719-7570	USER NAME = $USER$	DESIGNED - BLG	REVISED -	STATE OF ILLINOIS DEPARTMENT OF TRANSPORTATION	PAVEMENT MARKING AND SIGNAGE PLAN	F.A.U. RTE.	SECTION	COUNTY	TOTAL SHEETS / SHEET NO.
		DRAWN - JY	REVISED -			3578	2019-001-R	COOK	255 / 110
	PLOT SCALE = $SCALE$	CHECKED - BDH	REVISED -					CONTRACT NO. 62H82	
	PLOT DATE = $DATE$	DATE - 12/09/2022	REVISED -		SCALE: 1"=50' / SHEET OF SHEETS / STA. 126+00 TO STA. 135+00		ILLINOIS FED. AID PROJECT		

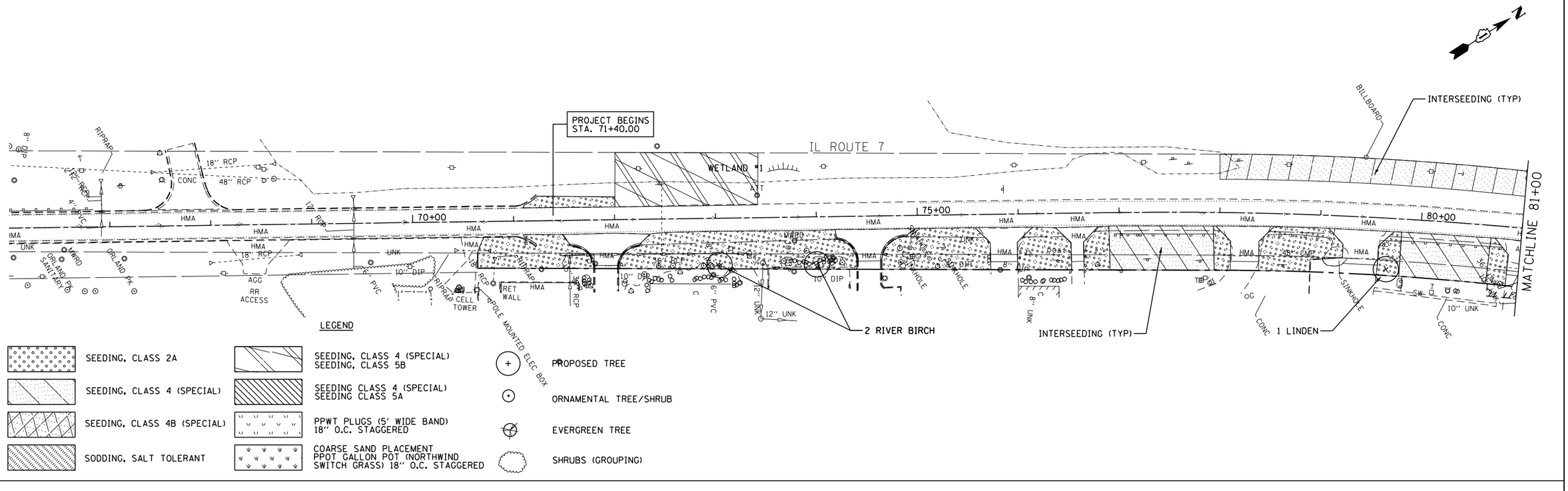

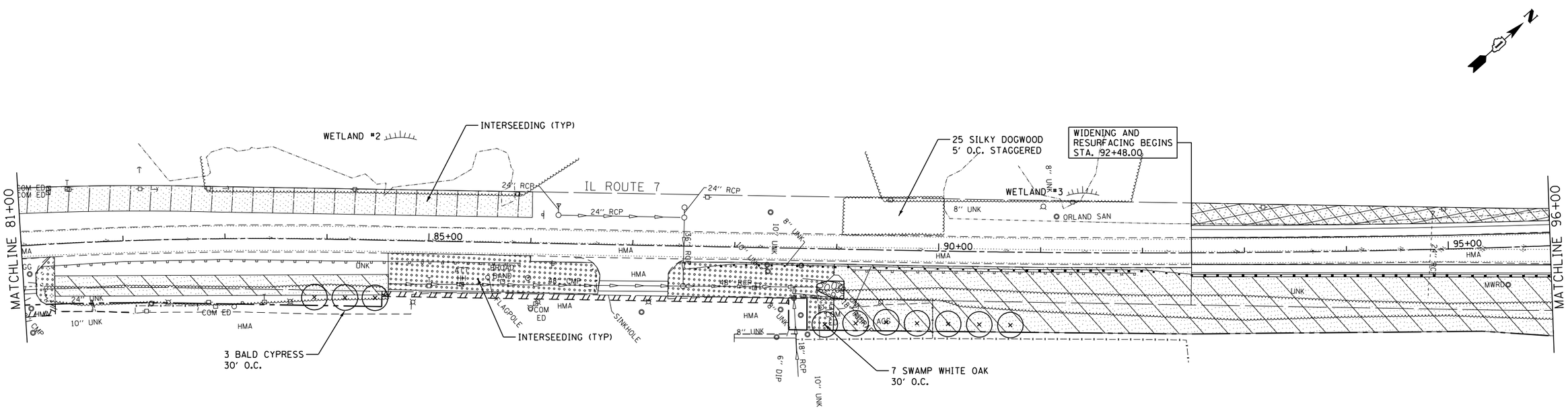

JAMES J. BENES & ASSOCIATES CONSULTING ENGINEERS 1011 WARRENVILLE ROAD, SUITE 420 LISLE, IL 60532 (630) 719-7570	USER NAME = $USER$	DESIGNED - BLG	REVISED -
		DRAWN - JY	REVISED -
	PLOT SCALE = $SCALE$	CHECKED - BDH	REVISED -
	PLOT DATE = $DATE$	DATE - 12/09/2022	REVISED -

STATE OF ILLINOIS
DEPARTMENT OF TRANSPORTATION

LANDSCAPE PLAN

SCALE: 1"=50' | SHEET 1 OF 4 SHEETS | STA. 71+40 TO STA. 96+00

F.A.U. RTE.	SECTION	COUNTY	TOTAL SHEETS	SHEET NO.
3578	2019-001-R	COOK	255	111

CONTRACT NO. 62H82

ILLINOIS FED. AID PROJECT

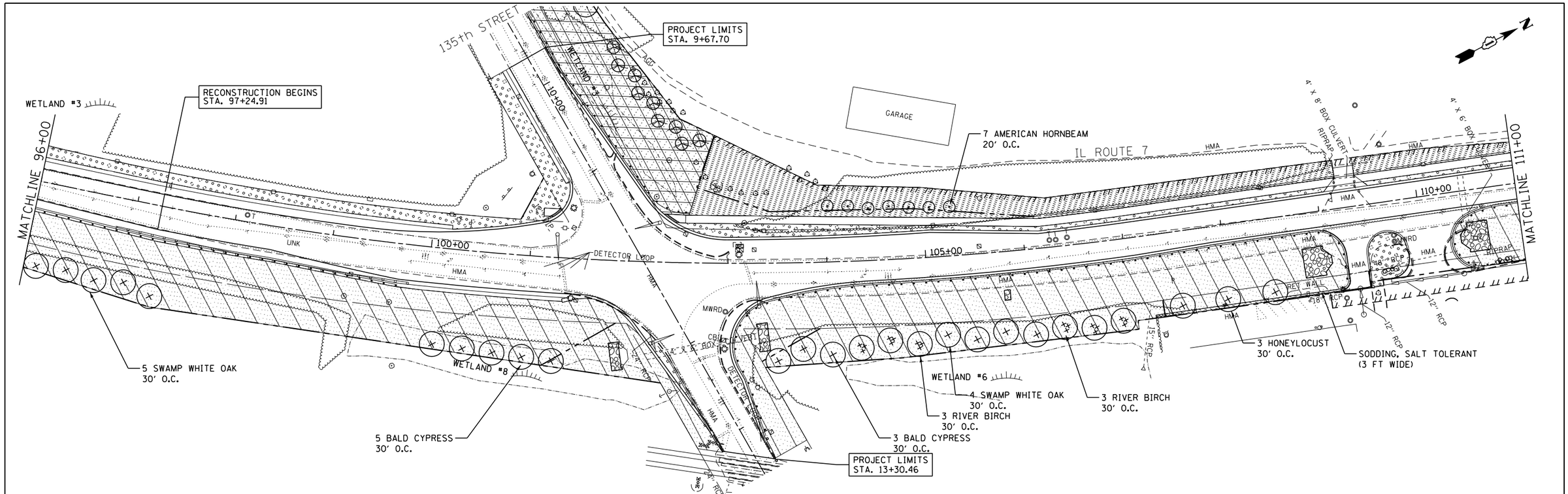

LEGEND

SEEDING, CLASS 2A	SEEDING, CLASS 4 (SPECIAL) SEEDING, CLASS 5B	SHADE TREE CODE A	
SEEDING, CLASS 4 (SPECIAL)	SEEDING CLASS 4 (SPECIAL) SEEDING CLASS 5A	ORNAMENTAL TREE/SHRUB	
SEEDING, CLASS 4B (SPECIAL)	PPWT PLUGS (5' WIDE BAND) 18" O.C. STAGGERED	EVERGREEN TREE	
SODDING, SALT TOLERANT	COARSE SAND PLACEMENT PPOT GALLON POT (NORTHWIND SWITCH GRASS) 18" O.C. STAGGERED	SHRUBS (GROUPING)	

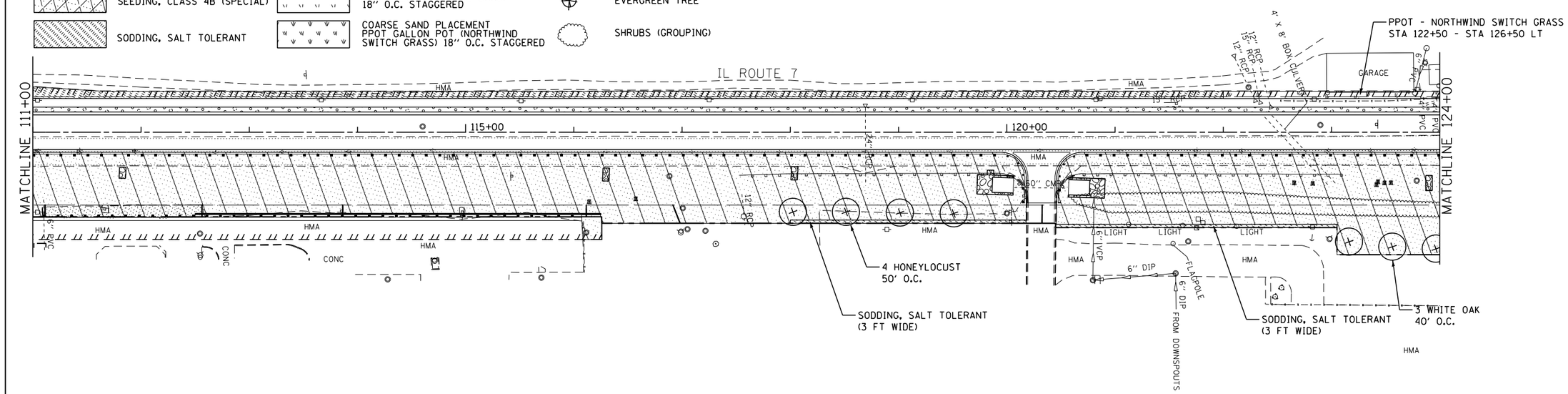

JAMES J. BENES & ASSOCIATES CONSULTING ENGINEERS 1011 WARRENVILLE ROAD, SUITE 420 LISLE, IL 60532 (630) 719-7570	USER NAME = $USER$	DESIGNED - BLG	REVISED -
		DRAWN - JY	REVISED -
	PLOT SCALE = $SCALE$	CHECKED - BDH	REVISED -
	PLOT DATE = $DATE$	DATE - 12/09/2022	REVISED -

STATE OF ILLINOIS
DEPARTMENT OF TRANSPORTATION

LANDSCAPE PLAN

SCALE: 1"=50' | SHEET 2 OF 4 SHEETS | STA. 96+00 TO STA. 126+00

F.A.U. RTE.	SECTION	COUNTY	TOTAL SHEETS	SHEET NO.
3578	2019-001-R	COOK	255	112

CONTRACT NO. 62H82

ILLINOIS FED. AID PROJECT

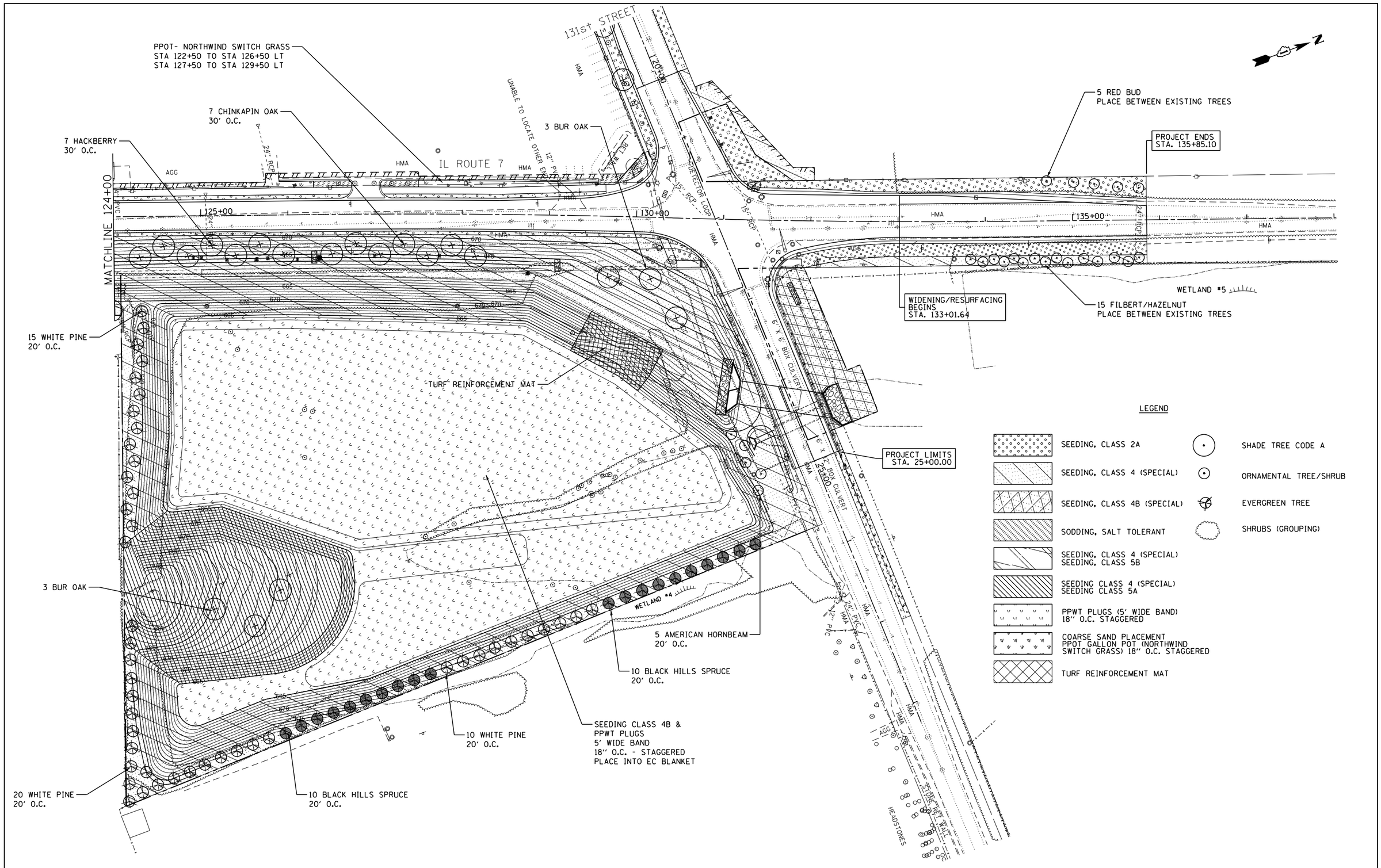

JAMES J. BENES & ASSOCIATES
CONSULTING ENGINEERS
1011 WARRENVILLE ROAD, SUITE 420
LISLE, IL 60532
(630) 719-7570

USER NAME = $USER$	DESIGNED - BLG	REVISED -
	DRAWN - JY	REVISED -
PLOT SCALE = $SCALE$	CHECKED - BDH	REVISED -
PLOT DATE = $DATE$	DATE - 12/09/2022	REVISED -

STATE OF ILLINOIS
DEPARTMENT OF TRANSPORTATION

LANDSCAPE PLAN

SCALE: 1"=50' | SHEET 3 OF 4 SHEETS | STA. 126+00 TO STA. 138+00

F.A.U. RTE.	SECTION	COUNTY	TOTAL SHEETS	SHEET NO.
3578	2019-001-R	COOK	255	113

CONTRACT NO. 62H82

ILLINOIS FED. AID PROJECT

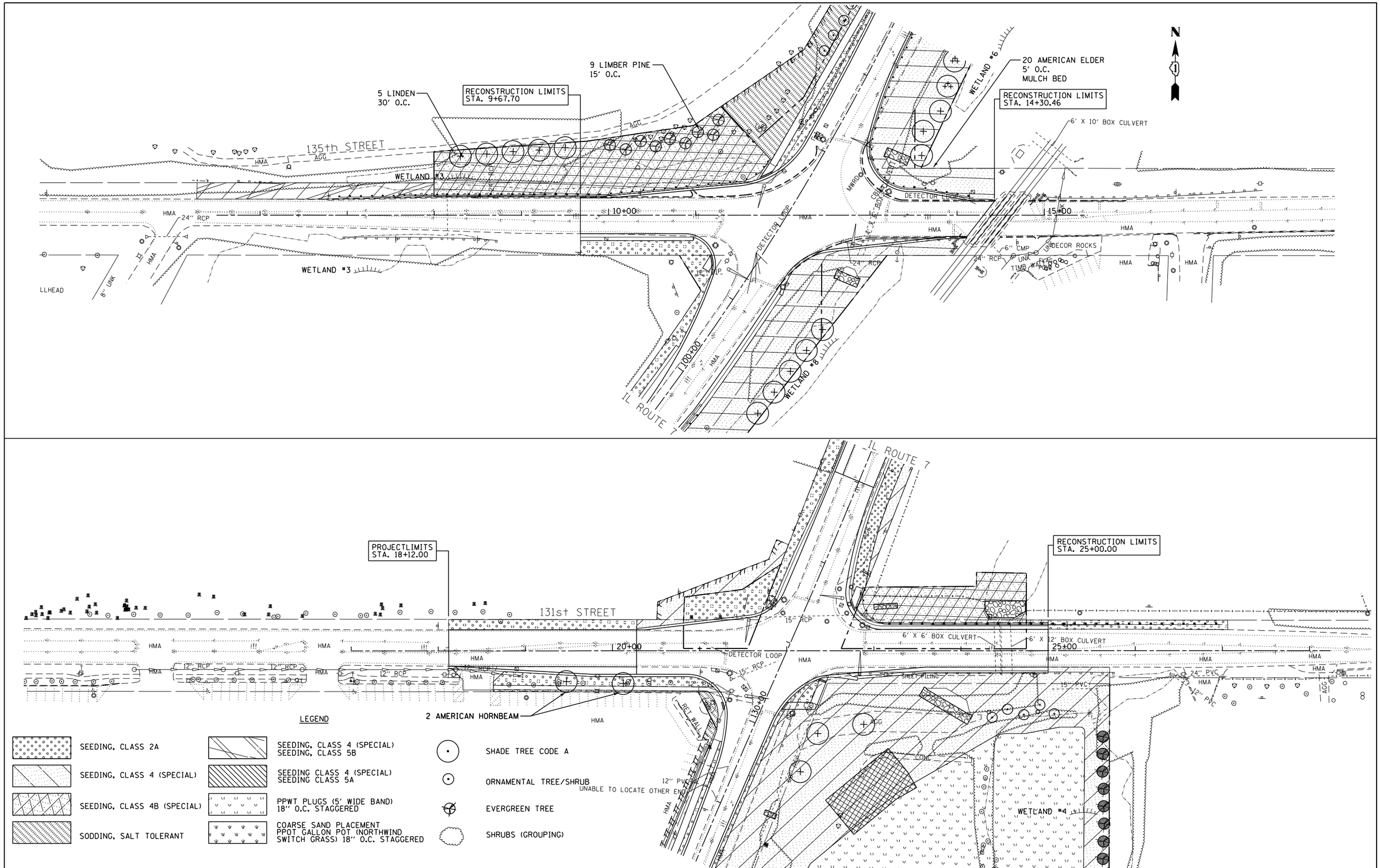

JAMES J. BENES & ASSOCIATES
CONSULTING ENGINEERS
1011 WARRENVILLE ROAD, SUITE 420
LISLE, IL 60532
(630) 719-7570

USER NAME = $USER$	DESIGNED - BLG	REVISED -
	DRAWN - JY	REVISED -
PLOT SCALE = $SCALE$	CHECKED - BDH	REVISED -
PLOT DATE = $DATE$	DATE - 12/09/2022	REVISED -

STATE OF ILLINOIS
DEPARTMENT OF TRANSPORTATION

LANDSCAPE PLAN
135TH ST AND 131ST ST

SCALE: 1"=50' | SHEET 4 OF 4 SHEETS | STA. TO STA.

F.A.U. RTE.	SECTION	COUNTY	TOTAL SHEETS	SHEET NO.
3578	2019-001-R	COOK	255	114

CONTRACT NO. 62H82

ILLINOIS FED. AID PROJECT

TRAFFIC SIGNAL LEGEND

(NOT TO SCALE)

ITEM	EXISTING	PROPOSED
CONTROLLER CABINET		
COMMUNICATION CABINET	ECC	CC
MASTER CONTROLLER	EMC	MC
MASTER MASTER CONTROLLER	EMMC	MMC
UNINTERRUPTABLE POWER SUPPLY		
SERVICE INSTALLATION -(P) POLE MOUNTED	P	P
SERVICE INSTALLATION -(G) GROUND MOUNTED -(GM) GROUND MOUNTED METERED	G GM	G GM
TELEPHONE CONNECTION	ET	T
STEEL MAST ARM ASSEMBLY AND POLE		
ALUMINUM MAST ARM ASSEMBLY AND POLE		
STEEL COMBINATION MAST ARM ASSEMBLY AND POLE WITH LUMINAIRE		
SIGNAL POST -(BM) BARREL MOUNTED - TEMPORARY		BM
WOOD POLE		
GUY WIRE		
SIGNAL HEAD		
SIGNAL HEAD WITH BACKPLATE		
SIGNAL HEAD OPTICALLY PROGRAMMED	P P	P P
FLASHER INSTALLATION -(FS) SOLAR POWERED	F FS F FS	F FS F FS
PEDESTRIAN SIGNAL HEAD		
PEDESTRIAN PUSH BUTTON -(APS) ACCESSIBLE PEDESTRIAN PUSH BUTTON	APS	APS
RADAR DETECTION SENSOR	R	R
VIDEO DETECTION CAMERA	V	V
RADAR/VIDEO DETECTION ZONE		
PAN, TILT, ZOOM (PTZ) CAMERA	PTZ	PTZ
EMERGENCY VEHICLE LIGHT DETECTOR		
CONFIMATION BEACON		
WIRELESS INTERCONNECT		
WIRELESS INTERCONNECT RADIO REPEATER	ERR	RR

ITEM	EXISTING	PROPOSED
HANDHOLE -SQUARE -ROUND		
HEAVY DUTY HANDHOLE -SQUARE -ROUND	H H	H H
DOUBLE HANDHOLE		
JUNCTION BOX		
RAILROAD CANTILEVER MAST ARM		
RAILROAD FLASHING SIGNAL		
RAILROAD CROSSING GATE		
RAILROAD CROSSBUCK		
RAILROAD CONTROLLER CABINET		
UNDERGROUND CONDUIT (UC), GALVANIZED STEEL		
TEMPORARY SPAN WIRE, TETHER WIRE, AND CABLE		
SYSTEM ITEM	S	SP
INTERSECTION ITEM	I	IP
REMOVE ITEM		R
RELOCATE ITEM		RL
ABANDON ITEM		A
CONTROLLER CABINET AND FOUNDATION TO BE REMOVED		RCF
MAST ARM POLE AND FOUNDATION TO BE REMOVED		RMF
SIGNAL POST AND FOUNDATION TO BE REMOVED		RPF
DETECTOR LOOP, TYPE I		
PREFORMED DETECTOR LOOP	P P	P P
SAMPLING (SYSTEM) DETECTOR	S S	S S
INTERSECTION AND SAMPLING (SYSTEM) DETECTOR	IS IS	IS IS
QUEUE AND SAMPLING (SYSTEM) DETECTOR	QS QS	QS QS
WIRELESS DETECTOR SENSOR	W	W
WIRELESS ACCESS POINT		

ITEM	EXISTING	PROPOSED
SIGNAL HEAD -(P) PROGRAMMABLE SIGNAL HEAD	R Y G Y G P R Y G Y G P	R Y G Y G P R Y G Y G P
SIGNAL HEAD WITH BACKPLATE -(P) PROGRAMMABLE SIGNAL HEAD -(RB) RETROREFLECTIVE BACKPLATE	R Y G Y G P R Y G Y G P R Y G Y G RB	R Y G Y G P R Y G Y G P R Y G Y G RB
PEDESTRIAN SIGNAL HEAD AT RAILROAD INTERSECTIONS		
PEDESTRIAN SIGNAL HEAD WITH COUNTDOWN TIMER	C D	C D
ILLUMINATED SIGN "NO LEFT TURN"/"NO RIGHT TURN"		
NUMBER OF CONDUCTORS, ELECTRIC CABLE NO. 14, UNLESS NOTED OTHERWISE. ALL DETECTOR LOOP CABLE TO BE SHIELDED	5	5
GROUND CABLE IN CONDUIT, NO. 6 SOLID COPPER (GREEN)	1#6	1#6
ELECTRIC CABLE IN CONDUIT, TRACER NO. 14 1/C	1	1
COAXIAL CABLE	C	C
VENDOR CABLE	V	V
COPPER INTERCONNECT CABLE, NO. 18, 3 PAIR TWISTED, SHIELDED	6#18	6#18
FIBER OPTIC CABLE -NO. 62.5/125, MM12F -NO. 62.5/125, MM12F SM12F -NO. 62.5/125, MM12F SM24F	12F 24F 36F	12F 24F 36F
GROUND ROD -(C) CONTROLLER -(M) MAST ARM -(P) POST -(S) SERVICE	C M P S	C M P S

TS SHT NO. 1

FILE NAME = S:\WP\Design\Iovan\SamplePlans-DO.NOT.USE\DGNFiles\Legend_06-08-16.dgn	USER NAME = plascencia	DESIGNED - IP	REVISED -
		DRAWN - IP	REVISED -
	PLOT SCALE = 100.0000 ' / in.	CHECKED - LP	REVISED -
Default	PLOT DATE = 6/10/2016	DATE - 6/8/2016	REVISED -

STATE OF ILLINOIS
DEPARTMENT OF TRANSPORTATION

DISTRICT ONE
STANDARD TRAFFIC SIGNAL DESIGN DETAILS

SCALE: NONE | SHEET 1 OF 7 SHEETS | STA. TO STA.

F.A.P. RTE.	SECTION	COUNTY	TOTAL SHEETS	SHEET NO.
3578	2019-001-R	COOK	255	115
	TS-05	CONTRACT NO. 62H82		
		ILLINOIS FED. AID PROJECT		

LOOP DETECTOR NOTES

1. EACH PAIR OF LOOP WIRES SHALL BE PLACED IN A SEPARATE EMPTY COILABLE NONMETALLIC CONDUIT FROM THE EDGE OF PAVEMENT TO THE HANDHOLE. SPACING BETWEEN THE HOLES DRILLED IN THE PAVEMENT SHALL NOT BE LESS THAN 6" (150 mm). EMPTY COILABLE NONMETALLIC CONDUIT SHALL BE INCLUDED IN THE COST OF THE LOOP WIRE.

2. THE NUMBER OF LOOP TURNS SHALL BE AS RECOMMENDED BY THE AMPLIFIER MANUFACTURER. ALL ADJACENT SIDES OF THE LOOPS SHALL BE INSTALLED IN SUCH A WAY THAT THE CURRENT FLOW IS IN THE SAME DIRECTION TO REINFORCE ITS MAGNETIC FIELDS FOR SMALL VEHICLE DETECTION.

3. EACH LOOP LEAD-IN SHALL BE IDENTIFIED AND PERMANENTLY TAGGED IN THE HANDHOLE. EACH LEAD-IN CABLE TAG SHALL INDICATE THE LOCATION OF THE LOOP, LOOP ROTATION (CLOCKWISE/COUNTERCLOCKWISE), LOOP LEAD-IN DIRECTION (IN OR OUT), LOOP CABLE NUMBER AND LOCATION IN CABINET, AND NUMBER OF TURNS IN THE DETECTOR LOOPS IN WATER PROOF INK AS INDICATED ON THE DISTRICT 1 STANDARD TRAFFIC SIGNAL DESIGN DETAIL. THE CONTRACTOR SHALL MARK LOOP LOCATIONS ON RECORD DRAWINGS AND PRESENT TO THE ENGINEER AFTER FINAL INSPECTION. LOOPS SHALL BE MARKED BY LANE AND LOOP NUMBER. SEE DETAIL BELOW.

4. ALL LOOP CABLE SHALL BE FASTENED WITH PLASTIC TIE WRAP TO THE HANDHOLE HOOKS.

5. IN ASPHALT PAVEMENT, LOOPS SHOULD BE PLACED IN THE BINDER AND DIVEHOLES MARKED AT THE CURB WITH A SAW-CUT. THE SAW-CUT SHALL BE CUT IN ACCORDANCE WITH LOCAL AND E.P.A. DUST CONTROL REQUIREMENTS. DETECTOR LOOP(S) SHALL NOT BE INSTALLED IN WET CONDITIONS AND THE SAW-CUTS MUST BE FREE OF DEBRIS AND RESIDUE SUCH AS DUST AND WATER WHICH IS TO BE ACHIEVED BY THE USE OF COMPRESSED AIR, WIRE BRUSHING AND HEAT DRYING ACCORDING TO SEALANT MANUFACTURER REQUIREMENTS. THE DETECTOR WIRE SHALL BE HELD IN PLACE BY THE USE OF FORM WEDGES. WEDGES SHALL BE SPACED NO MORE THAN 18" (450 mm) APART.

6. LOOP SPLICES SHALL BE SOLDERED USING A SOLDERING IRON. BLOW TORCHES OR OTHER DEVICES WHICH OXIDIZE COPPER CABLE SHALL NOT BE ALLOWED FOR SOLDERING OPERATIONS. SEE DETAIL BELOW RIGHT.

7. PREFORMED DETECTOR LOOPS SHALL BE USED, AS SHOWN ON THE PLANS, WHERE NEW CONCRETE PAVEMENT IS PROPOSED. THE INSTALLATION OF PREFORMED LOOPS SHALL BE IN ACCORDANCE WITH THE DISTRICT 1 SPECIFICATIONS OR AS DIRECTED BY THE ENGINEER.

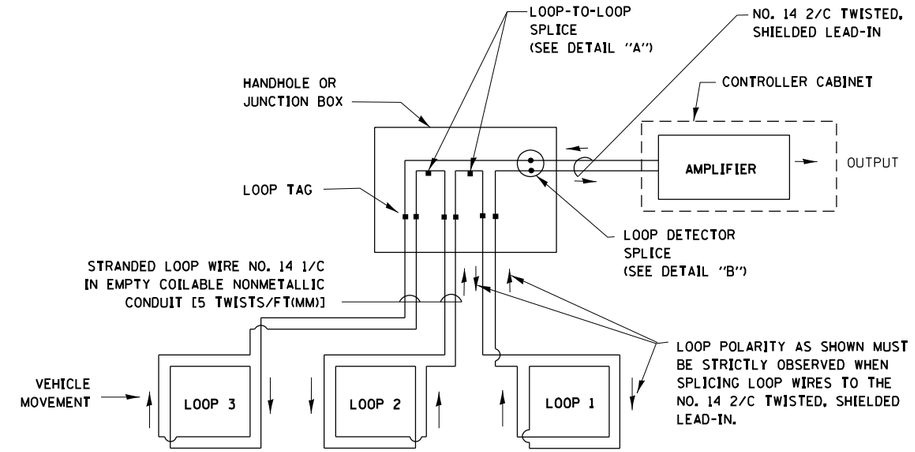

DETECTOR LOOP WIRING SCHEMATIC

- LOOPS SHALL BE SPLICED IN SERIES.
- SAW-CUTS SHALL BE A MINIMUM WIDTH OF 5/16" (8 mm).
- SAW-CUT DEPTHS SHALL BE 3" (75 mm). IF IN CONCRETE, THE SAW-CUT DEPTH SHALL BE TO THE TOP OF THE REINFORCEMENT.
- LOOP CORNERS SHALL BE DRILLED WITH A 2" (50 mm) DIAMETER CORE.

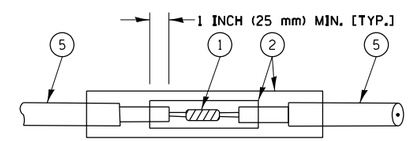

DETAIL "A"
LOOP-TO-LOOP SPLICE

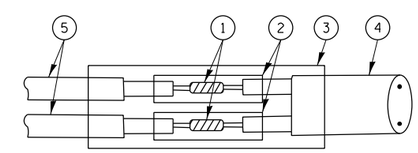

DETAIL "B"
LOOP-TO-CONTROLLER SPLICE

TYPE I LOOP

LOOP LEAD-IN CABLE TAG

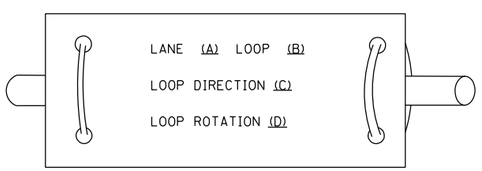

A. LANE 1 IS THE LANE CLOSEST TO THE CENTERLINE OF THE ROADWAY

B. LOOP #1 IS THE LOOP IN THE LANE CLOSEST TO THE INTERSECTION.

C. LABEL LOOP CABLE "IN" OR LOOP CABLE "OUT".

D. LABEL LOOP CABLE CLOCKWISE OR LOOP CABLE COUNTERCLOCKWISE.

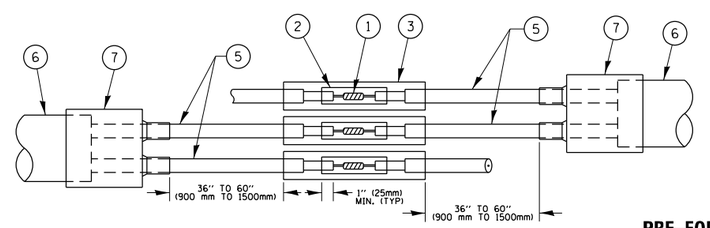

DETAIL "A"
LOOP-TO-LOOP SPLICE

PRE-FORMED LOOP

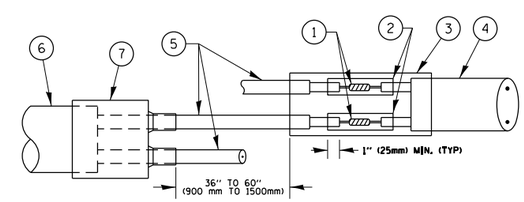

DETAIL "B"
LOOP-TO-CONTROLLER SPLICE

LOOP DETECTOR SPLICE

1. WESTERN UNION SPLICE SOLDERED WITH ROSIN CORE FLUX. ALL EXPOSED SURFACES OF THE SOLDER SHALL BE SMOOTH. THE WESTERN UNION SPLICES SHALL BE STAGGERED.
2. WCSMW 30/100 HEAT SHRINK TUBE, MINIMUM LENGTH 3" (75 mm), UNDERWATER GRADE.
3. WCS 200/750 HEAT SHRINK TUBE, MINIMUM LENGHT 6" (150 mm), UNDERWATER GRADE.
4. NO. 14 2/C TWISTED, SHIELDED CABLE.
5. LOOP CONDUCTOR WITH FLEXIBLE PLASTIC TUBE.
6. PRE-FORMED LOOP
7. XL POLYOLEFIN 2 CONDUCTOR BREAKOUT SEALS. TYCO CBR-2 OR APPROVED EQUAL

TS SHT NO. 2

FILE NAME = S:\WP\Design\Iovan\SamplePlans\DGNFiles\TSExample01-sht-ts.dgn	USER NAME = plascencia1	DESIGNED -	REVISED -
	PLOT SCALE = 100.0000 ' / in.	DRAWN -	REVISED -
Default	PLOT DATE = 5/17/2016	CHECKED -	REVISED -
		DATE -	REVISED -

STATE OF ILLINOIS
DEPARTMENT OF TRANSPORTATION

DISTRICT ONE
STANDARD TRAFFIC SIGNAL DESIGN DETAILS

SCALE: NONE | SHEET 2 OF 7 SHEETS | STA. TO STA.

F.A.P. RTE.	SECTION	COUNTY	TOTAL SHEETS	SHEET NO.
3578	2019-001-R	COOK	255	116
	TS-05	CONTRACT NO. 62H82		
		ILLINOIS FED. AID PROJECT		

TRAFFIC SIGNAL MAST ARM AND SIGNAL POST

MAST ARM MOUNTED SIGNALS IN EXISTING, PROPOSED OR FUTURE SIDEWALK/BICYCLE PATH AREA. INTERSECTION SHOWN WITH PEDESTRIAN SIGNALS AND PEDESTRIAN PUSHBUTTON DETECTORS.

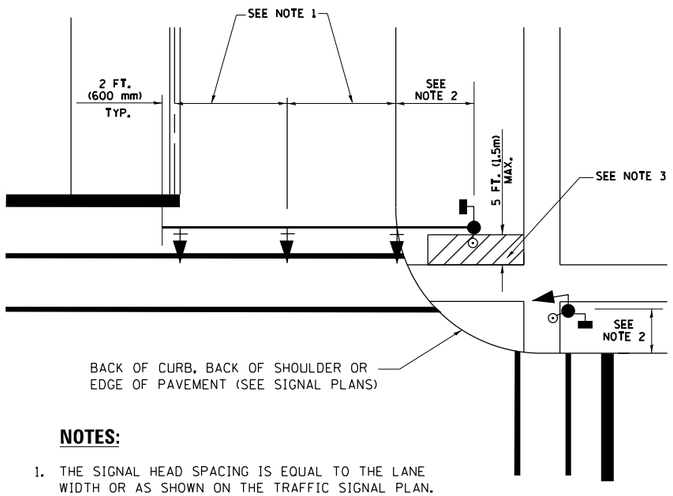

NOTES:

1. THE SIGNAL HEAD SPACING IS EQUAL TO THE LANE WIDTH OR AS SHOWN ON THE TRAFFIC SIGNAL PLAN.
2. REFER TO THE TRAFFIC SIGNAL EQUIPMENT OFFSET TABLE.
3. PROVIDE A LEVEL ALL-WEATHER SURFACE (CONCRETE SIDEWALK, ASPHALT BICYCLE PATH SURFACE OR MATCHING MATERIAL TO THE ADJACENT SURFACE) UP TO THE MAST ARM SHAFT OR THE SIGNAL POST.
4. THE FACE OF THE PEDESTRIAN PUSHBUTTON SHALL BE PARALLEL TO THE CROSSWALK TO BE USED.
5. THE LOCATIONS AND INSTALLATION OF PEDESTRIAN SIGNAL HEADS AND PEDESTRIAN PUSHBUTTONS SHALL MEET THE REQUIREMENTS OF THE MUTCD AND INFORMATION FOUND IN THE "AMERICANS WITH DISABILITIES ACT ACCESSIBILITY GUIDELINES FOR BUILDINGS AND FACILITIES."

PEDESTRIAN SIGNAL POST AND PEDESTRIAN PUSH BUTTON POST

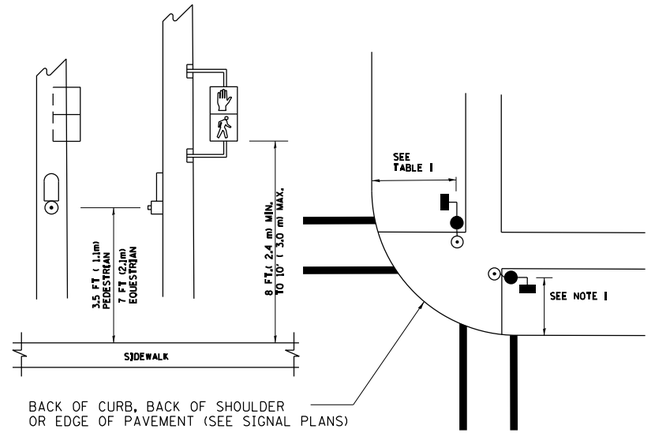

NOTES:

1. REFER TO THE TRAFFIC SIGNAL EQUIPMENT OFFSET TABLE.
2. PROVIDE A LEVEL ALL-WEATHER SURFACE (CONCRETE SIDEWALK, ASPHALT BICYCLE PATH SURFACE OR MATCHING MATERIAL TO THE ADJACENT SURFACE) UP TO THE PEDESTRIAN SIGNAL POST OR THE PEDESTRIAN PUSH BUTTON POST.
3. THE FACE OF THE PEDESTRIAN PUSHBUTTON SHALL BE PARALLEL TO THE CROSSWALK TO BE USED.
4. THE LOCATIONS AND INSTALLATION OF PEDESTRIAN SIGNAL HEADS AND PEDESTRIAN PUSHBUTTONS SHALL MEET THE REQUIREMENTS OF THE MUTCD AND INFORMATION FOUND IN THE "AMERICANS WITH DISABILITIES ACT ACCESSIBILITY GUIDELINES FOR BUILDINGS AND FACILITIES."

RECOMMENDED PUSHBUTTON LOCATIONS

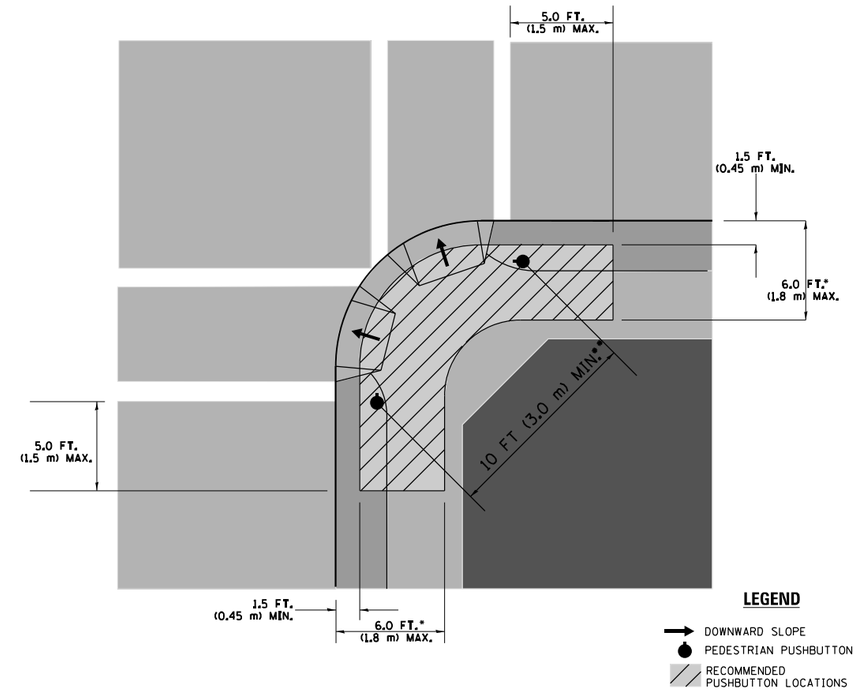

* WHERE THERE ARE CONSTRAINTS THAT MAKE IT IMPRACTICAL TO PLACE THE PEDESTRIAN PUSHBUTTON BETWEEN 1.5 FT (0.45 m) AND 6 FT (1.8 m) FROM THE EDGE OF THE CURB, SHOULDER, OR PAVEMENT, IT SHOULD NOT BE FURTHER THAN 10 FT (3 m) FROM THE EDGE OF CURB, SHOULDER, OR PAVEMENT.

** WHERE THERE ARE CONSTRAINTS ON A PARTICULAR CORNER THAT MAKE IT IMPRACTICAL TO PROVIDE THE 10 FT (3 m) SEPERATION BETWEEN THE TWO PEDESTRIAN PUSHBUTTONS, THE PUSHBUTTONS MAY BE PLACED CLOSER TOGETHER OR ON THE SAME POLE.

NOTES:

1. PEDESTRIAN SIGNAL HEADS SHALL BE MOUNTED WITH THE BOTTOM OF THE SIGNAL HOUSING INCLUDING BRACKETS NOT LESS THAN 8 FT (2.4 m) OR MORE THAN 10 FT (3 m) ABOVE SIDEWALK LEVEL, AND SHALL BE POSITIONED AND ADJUSTED TO PROVIDE MAXIMUM VISIBILITY AT THE BEGINNING OF THE CONTROLLED CROSSWALK.
2. THE BOTTOM OF THE SIGNAL HOUSING (INCLUDING BRACKETS) OF A VEHICULAR SIGNAL FACE THAT IS NOT LOCATED OVER A HIGHWAY SHALL BE AT LEAST 8 FT (2.4 m) BUT NOT MORE THAN 19 FT (5.8 m) ABOVE THE SIDEWALK OR, IF THERE IS NO SIDEWALK, ABOVE THE PAVEMENT GRADE AT THE CENTER OF THE ROADWAY.
3. THE BOTTOM OF THE SIGNAL HOUSING AND ANY RELATED ATTACHMENTS TO A SIGNAL FACE LOCATED OVER ANY PORTION OF A HIGHWAY SHALL BE ACCORDING TO CURRENT STATE STANDARDS 877001, 877002, 877006, 877011 AND 877012 WITH A MINIMUM OF 16 FT (5.0 m) AND A MAXIMUM OF 18 FT. (5.5 m) FROM THE HIGHEST POINT OF PAVEMENT.
4. THE BOTTOM OF THE TEMPORARY SPAN WIRE MOUNTED SIGNAL HOUSING AND ANY RELATED ATTACHMENTS TO A SIGNAL FACE LOCATED OVER ANY PORTION OF A HIGHWAY SHALL BE ACCORDING TO CURRENT STATE STANDARD 880001 WITH A MINIMUM OF 17 FT (5.18 m) FROM THE HIGHEST POINT OF PAVEMENT.
5. THE TOP OF THE SIGNAL HOUSING OF A SIGNAL FACE LOCATED OVER ANY PORTION OF A HIGHWAY SHALL NOT BE MORE THAN 25.6 FT (7.8 m) ABOVE THE PAVEMENT.

TRAFFIC SIGNAL EQUIPMENT OFFSET

TRAFFIC SIGNAL EQUIPMENT	COMBINATION CONCRETE CURB AND GUTTER (MINIMUM DISTANCE FROM BACK OF CURB TO CENTERLINE OF FOUNDATION)	SHOULDER/NON-CURBED AREA (MINIMUM DISTANCE FROM EDGE OF PAVEMENT TO CENTERLINE OF FOUNDATION)
TRAFFIC SIGNAL MAST ARM POLE	6 FT (1.8m)	SHOULDER WIDTH + 2 FT (0.6m), MINIMUM 10 FT (3.0m)
TRAFFIC SIGNAL POST	4 FT (1.2m)	SHOULDER WIDTH + 2 FT (0.6m), MINIMUM 10 FT (3.0m)
PEDESTRIAN SIGNAL POST	4 FT (1.2m)	SHOULDER WIDTH + 2 FT (0.6m), MINIMUM 10 FT (3.0m)
PEDESTRIAN PUSHBUTTON POST	4 FT (1.2m)	SHOULDER WIDTH + 2 FT (0.6m), MINIMUM 10 FT (3.0m)
TEMPORARY WOOD POLE	6 FT (1.8m)	SHOULDER WIDTH + 2 FT (0.6m), MINIMUM 10 FT (3.0m)
CONTROLLER CABINET	6 FT (1.8m) MINIMUM DISTANCE SEE NOTE 2	SHOULDER WIDTH + 6 FT (1.8m), MINIMUM 16 FT (4.9m) SEE NOTE 3.
SERVICE INSTALLATION, GROUND MOUNT	6 FT (1.8m) MINIMUM DISTANCE SEE NOTE 2	SHOULDER WIDTH + 6 FT (1.8m), MINIMUM 16 FT (4.9m) SEE NOTE 3.

NOTES:

1. CONTACT THE "AREA TRAFFIC SIGNAL MAINTENANCE AND OPERATIONS ENGINEER" FOR ASSISTANCE IN LOCATING THE TRAFFIC SIGNAL EQUIPMENT WHEN THERE ARE CONFLICTS WITH DITCHES OR THE MINIMUM OFFSET DISTANCES CANNOT BE MET.
2. MINIMUM DISTANCE FROM THE BACK OF CURB TO THE ROADWAY SIDE OF THE FOUNDATION.
3. MINIMUM DISTANCE FROM THE EDGE OF PAVEMENT TOTHE ROADWAY SIDE OF THE FOUNDATION.
4. ANY CHANGES TO THE OFFSETS OF THE FOUNDATIONS, FROM THE MINIMUM DISTANCES LISTED IN THE "TRAFFIC SIGNAL EQUIPMENT OFFSET" CHART AND THE TRAFFIC SIGNAL INSTALLATION PLAN, COULD EFFECT THE PLACEMENT OF THE SIGNAL HEADS, PEDESTRIAN SIGNAL HEADS AND THE PEDESTRIAN PUSHBUTTONS. THE SIGNAL HEAD PLACEMENT ON THE MAST ARMS SHALL REMAIN AS PER THE TRAFFIC SIGNAL INSTALLATION PLAN AND THE "TRAFFIC SIGNAL MAST ARM AND SIGNAL POST" DETAIL ABOVE. THE PROPOSED MAST ARM LENGTHS MAY NEED TO BE REVISED TO MEET THE ABOVE REQUIREMENTS. THE PEDESTRIAN SIGNAL HEADS AND PEDESTRIAN PUSHBUTTONS MUST MEET THE REQUIREMENTS UNDER THE DETAILS ON THIS SHEET.

TS SHT NO. 3

FILE NAME =	USER NAME = plascencia	DESIGNED -	REVISED -
S:\WP\Design\Iovan\SamplePlans\DGNFiles\TSExample01-sht-ts.dgn		DRAWN -	REVISED -
	PLOT SCALE = 100.0000 ' / in.	CHECKED -	REVISED -
Default	PLOT DATE = 5/17/2016	DATE -	REVISED -

STATE OF ILLINOIS
DEPARTMENT OF TRANSPORTATION

DISTRICT ONE
STANDARD TRAFFIC SIGNAL DESIGN DETAILS

SCALE: NONE | SHEET 3 OF 7 SHEETS | STA. TO STA.

F.A.P. RTE.	SECTION	COUNTY	TOTAL SHEETS	SHEET NO.
3578	2019-001-R	COOK	255	117
	TS-05	CONTRACT NO. 62H82		
	ILLINOIS FED. AID PROJECT			

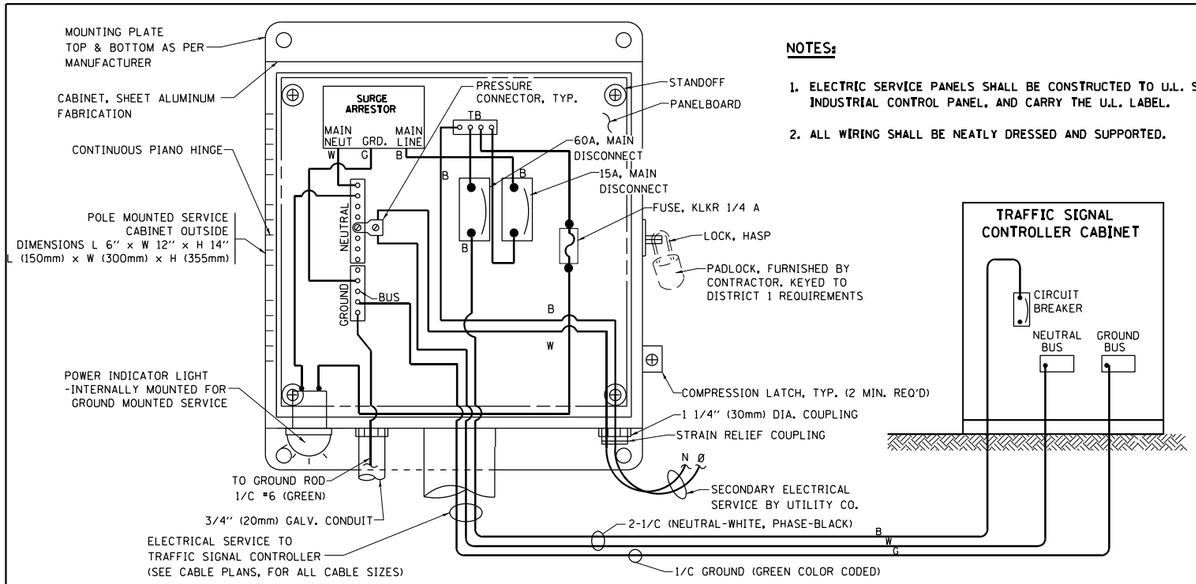

NOTES:

1. ELECTRIC SERVICE PANELS SHALL BE CONSTRUCTED TO U.L. STD 508, INDUSTRIAL CONTROL PANEL, AND CARRY THE U.L. LABEL.
2. ALL WIRING SHALL BE NEATLY DRESSED AND SUPPORTED.

ELECTRICAL SERVICE – PANEL DIAGRAM (TYPICAL FOR POLE AND GROUND MOUNTED SERVICE)
SERVICE INSTALLATION POLE MOUNT (SHOWN)

(NOT TO SCALE)

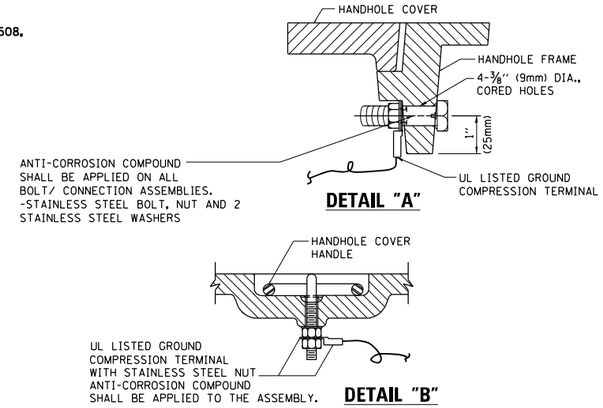

NOTES:
GROUNDING SYSTEM

1. THE GROUNDING SYSTEM SHALL CONSIST OF AN INSULATED CONDUCTOR TYPE XLP, NO. 6 A.W.G., STRANDED COPPER TO BE INSTALLED IN RACEWAYS. THE GROUNDING CABLE SHALL BE INSTALLED IN A CONTINUOUS MANNER AS SHOWN ON THE CABLE PLAN PROVIDED. ALL GROUNDING CONDUCTORS SHALL BE BONDED TO METAL ENCLOSURE (HANDHOLE, POST, MAST ARM, CONTROLLER, ETC.). GROUND ROD SHALL BE 3/4" DIA. x 10'-0" (20mm x 3.0m) LONG, COPPER CLAD. ONE GROUND ROD SHALL BE INSTALLED AT ALL POST FOUNDATIONS, POLE FOUNDATIONS, CONTROLLER CABINET FOUNDATION AND ELECTRICAL SERVICE INSTALLATION AS INDICATED ON THE CABLE PLAN. IF THERE ARE ANY SPECIAL CONDITIONS SUCH AS SUB-SURFACE CONDITIONS OR INSTALLATION PROBLEMS, THE RESIDENT ENGINEER SHALL BE NOTIFIED OR CONTACT THE BUREAU OF TRAFFIC, ILLINOIS DEPARTMENT OF TRANSPORTATION DISTRICT ONE AT (847) 705-4139.
2. THE NEUTRAL CONDUCTOR AND THE GROUND CONDUCTOR SHALL BE CONNECTED IN THE SERVICE INSTALLATION. AT NO OTHER POINT IN THE TRAFFIC SIGNAL SYSTEM SHALL THE NEUTRAL AND GROUND CONDUCTORS BE CONNECTED.
3. ALL EQUIPMENT GROUNDING CONDUCTORS SHALL TERMINATE AT THE GROUND BUS IN THE CONTROLLER CABINET.
4. THE CONTRACTOR SHALL PROVIDE A GROUND CABLE WITH CONNECTORS BETWEEN THE HANDHOLE COVER AND HANDHOLE FRAME.

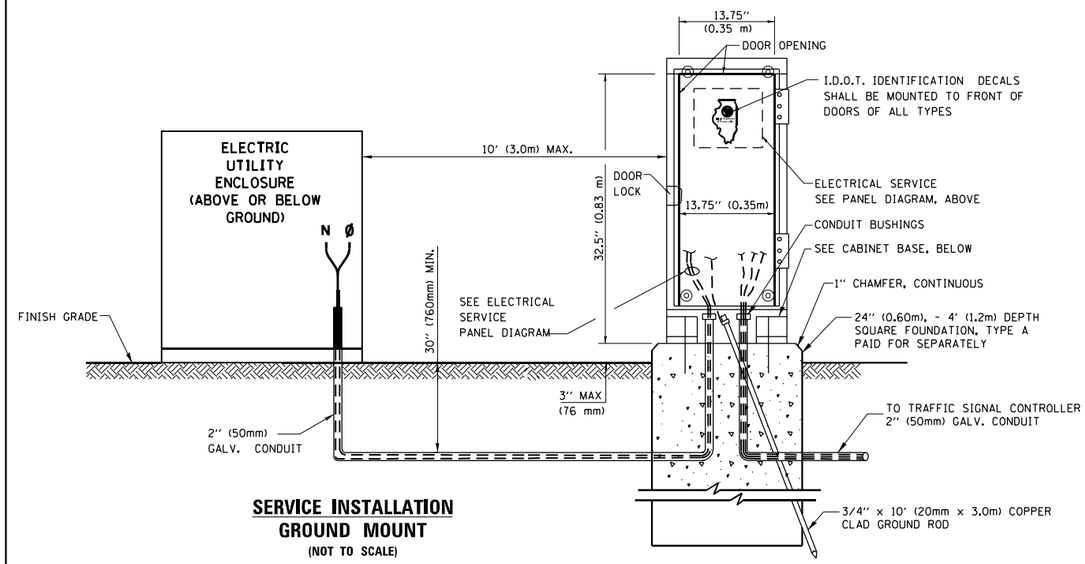

SERVICE INSTALLATION
GROUND MOUNT

(NOT TO SCALE)

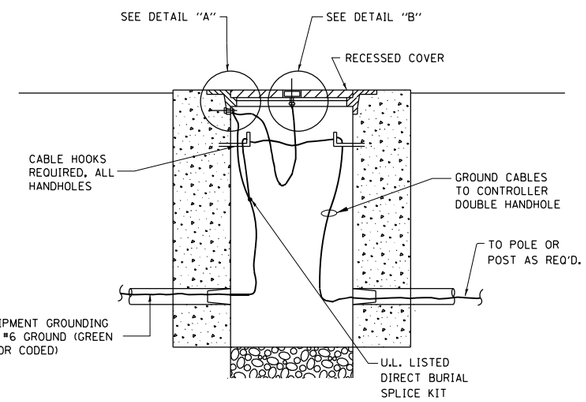

HANDHOLE COVER & FRAME – GROUNDING DETAIL

(NOT TO SCALE)

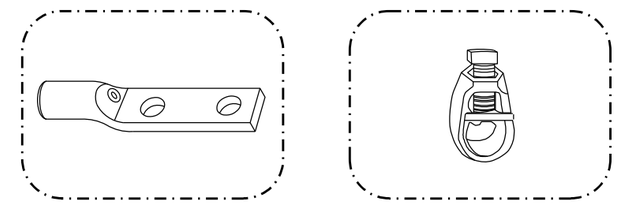

HEAVY-DUTY COMPRESSION TERMINAL
(BURNDY TYPE YGHA OR APPROVED EQUAL)

3/4" (20mm) HEAVY-DUTY GROUND ROD CLAMP
(BURNDY TYPE GRC OR APPROVED EQUAL)

NOTES:

- ALL CLAMPS SHALL BE BRONZE OR COPPER, UL APPROVED.
- GROUND CABLE SHALL BE LOOPED OVER HOOKS IN THE HANDHOLES
  6.5' (2.0m) SLACK SHALL BE PROVIDED IN SINGLE HANDHOLES
  13' (4.0m) OF SLACK SHALL BE PROVIDED IN DOUBLE HANDHOLES.
  5' (1.4m) OF SLACK SHALL BE PROVIDED BETWEEN FRAME AND COVER.

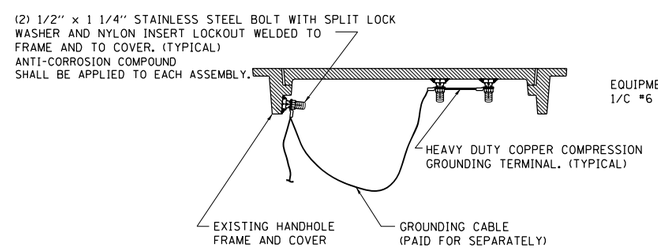

EXISTING HANDHOLE COVER & FRAME – GROUNDING DETAIL

(NOT TO SCALE)

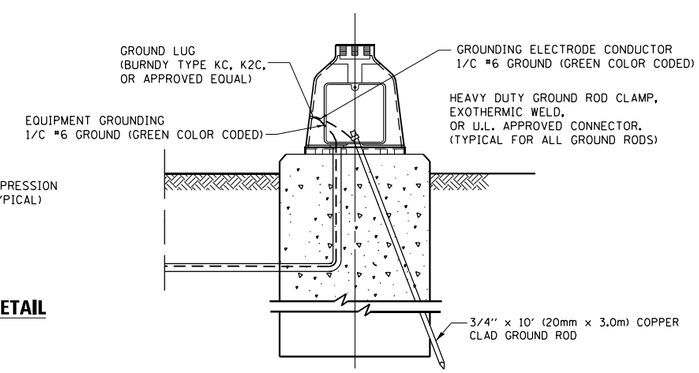

MAST ARM POLE / POST–GROUNDING DETAIL

(NOT TO SCALE)

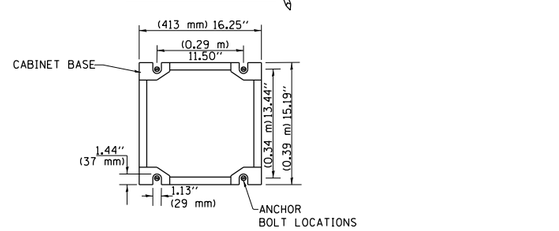

CABINET – BASE BOLT PATTERN

(NOT TO SCALE)

TS SHT NO. 4

FILE NAME = S:\WP\Design\Iovan\SamplePlans\DGNFiles\TSExample01-sht-ts.dgn	USER NAME = plascencia	DESIGNED -	REVISED -	STATE OF ILLINOIS DEPARTMENT OF TRANSPORTATION	DISTRICT ONE STANDARD TRAFFIC SIGNAL DESIGN DETAILS	F.A.P. RTE.	SECTION	COUNTY	TOTAL SHEETS	SHEET NO.
	PLOT SCALE = 100.0000 ' / in.	DRAWN -	REVISED -			3578	2019-001-R	COOK	255	118
		CHECKED -	REVISED -				TS-05	CONTRACT NO. 62H82		
Default	PLOT DATE = 5/17/2016	DATE -	REVISED -		SCALE: NONE SHEET 4 OF 7 SHEETS STA. TO STA.		ILLINOIS FED. AID PROJECT			

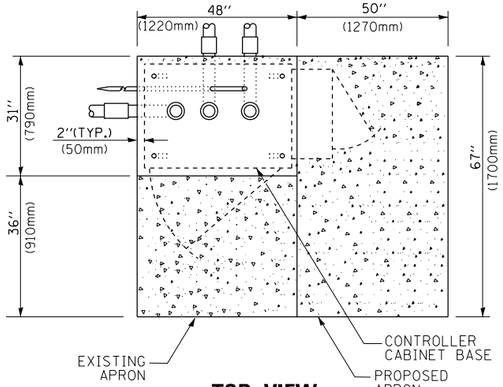

TOP VIEW

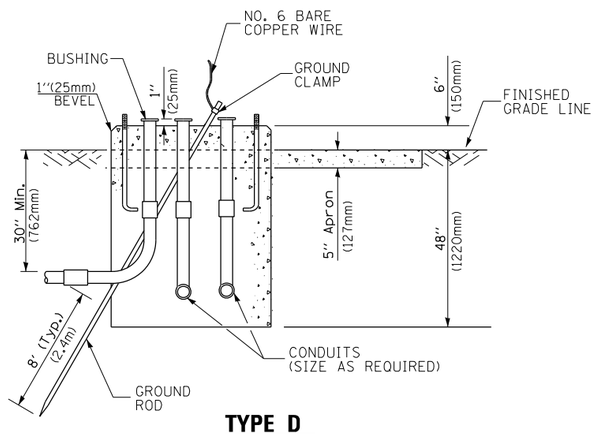

TYPE D
FOR GROUND MOUNTED
CONTROLLER CABINET
AND UPS BATTERY CABINET

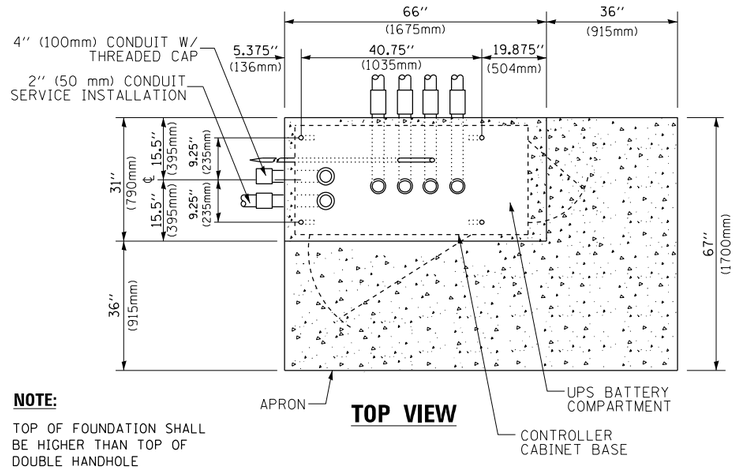

NOTE:

TOP OF FOUNDATION SHALL BE HIGHER THAN TOP OF DOUBLE HANDHOLE

TOP VIEW

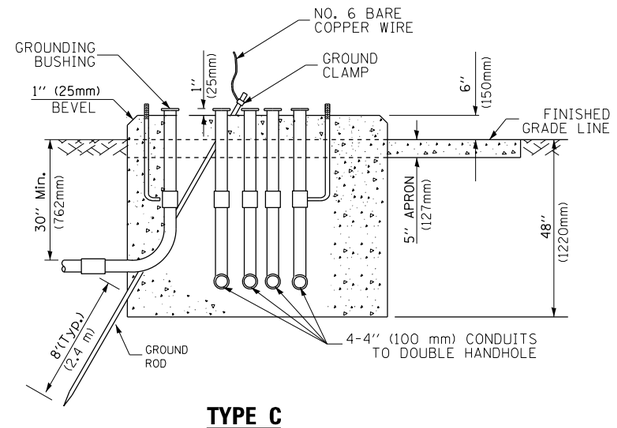

TYPE C
FOR GROUND MOUNTED
SUPER P (TYPE IV) AND SUPER R (TYPE V)
CONTROLLER CABINETS

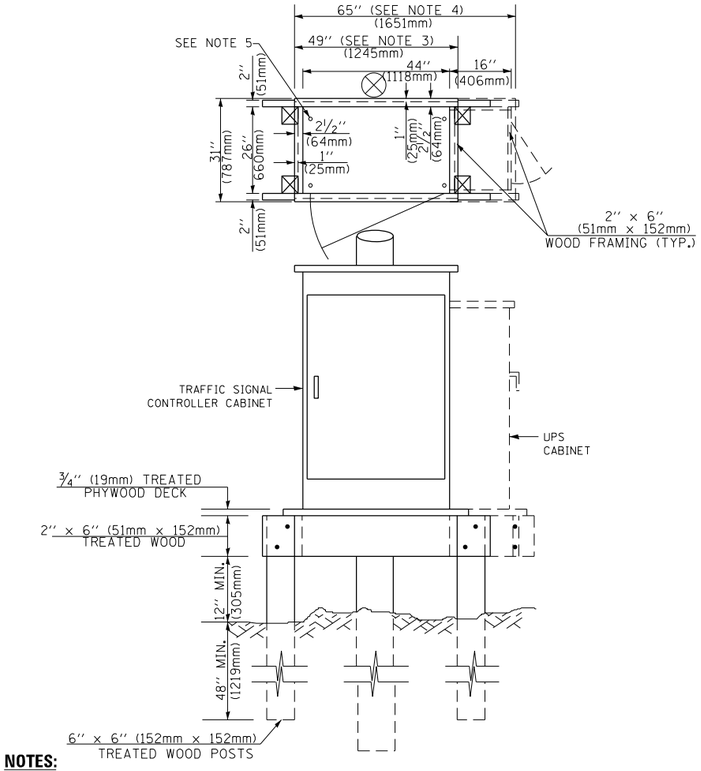

NOTES:

1. BASED ON CONTROLLER CABINET TYPE IV WITH BASE DIMENSIONS OF 26" x 44" (660mm x 1118mm). ADJUST PLATFORM SIZE TO FIT CABINET BASE DIMENSIONS BEING SUPPLIED
2. BASED ON UNINTERRUPTIBLE POWER SUPPLY CABINET WITH BASE DIMENSIONS OF 16" x 25" (406mm x 635mm). ADJUST PLATFORM SIZE TO FIT CABINET BASE DIMENSIONS BEING SUPPLIED.
3. PLATFORM SIZE FOR CONTROLLER CABINET TYPE IV.
4. PLATFORM SIZE FOR CONTROLLER CABINET TYPE IV AND UNINTERRUPTIBLE POWER SUPPLY CABINET.
5. DRILLED HOLES THROUGH THE PLATFORM BASE TO MATCH THE CONTROLLER CABINET BOLT TEMPLATE. FASTEN THE CONTROLLER CABINET TO THE PLATFORM WITH CARRIAGE BOLTS, WASHERS AND NUTS.
6. FASTEN ALL SUPPORT WOOD FRAMING TO THE WOOD POSTS WITH 2 LAG SCREWS FOR EACH CONNECTION..

TEMPORARY SIGNAL CONTROLLER
WOOD SUPPORT PLATFORM

CABLE SLACK LENGTH	FEET	METER
HANDHOLE	6.5	2.0
DOUBLE HANDHOLE	13.0	4.0
SIGNAL POST	2.0	0.6
MAST ARM	2.0	0.6
CONTROLLER CABINET	1.5	0.5
FIBER OPTIC AT CABINET	13.0	4.0
ELECTRIC SERVICE AT (CABINET OR SERVICE LOCATION)	1.5	0.5
GROUND CABLE (SIGNAL POST, MAST ARM, CABINET)	1.5	0.5
GROUND CABLE (BETWEEN FRAME AND COVER)	5.0	1.6

CABLE SLACK

VERTICAL CABLE LENGTH	FEET	METER
MAST ARM POLE (MAST ARM MOUNTED SIGNAL HEAD) (L = MAST ARM LENGTH - DISTANCE TO SIGNAL HEAD FROM END OF ARM)	20.0+L	6.0+L
BRACKET MOUNTED (MAST ARM POLE OR SIGNAL POLE)	13.0	4.0
PEDESTRIAN PUSH BUTTON	6.0	2.0
SERVICE INSTALLATION POLE MOUNT TO SERVICE DROP	13.5	4.1
SERVICE INSTALLATION POLE MOUNT TO GROUND	13.5	4.1
SERVICE INSTALLATION GROUND MOUNT	6.0	2.0
FOUNDATION (SIGNAL POST, MAST ARM POLE, CONTROLLER CABINET, SERVICE-GROUND MOUNT)	3.0	1.0

VERTICAL CABLE LENGTH

FOUNDATION	DEPTH
TYPE A - Signal Post	4'-0" (1.2m)
TYPE C - CONTROLLER W/ UPS	4'-0" (1.2m)
TYPE D - CONTROLLER	4'-0" (1.2m)
SERVICE INSTALLATION, GROUND MOUNT, TYPE A - SQUARE	4'-0" (1.2m)

DEPTH OF FOUNDATION

Mast Arm Length	① Foundation Depth	Foundation Diameter	Spiral Diameter	Quantity of Rebars	Size of Rebars
Less than 30' (9.1 m)	10'-0" (3.0 m)	30" (750mm)	24" (600mm)	8	6(19)
Greater than or equal to 30' (9.1 m) and less than 40' (12.2 m)	13'-6" (4.1 m)	30" (750mm)	24" (600mm)	8	6(19)
	11'-0" (3.4 m)	36" (900mm)	30" (750mm)	12	7(22)
Greater than or equal to 40' (12.2 m) and less than 50' (15.2 m)	13'-0" (4.0 m)	36" (900mm)	30" (750mm)	12	7(22)
Greater than or equal to 50' (15.2 m) and up to 55' (16.8 m)	15'-0" (4.6 m)	36" (900mm)	30" (750mm)	12	7(22)
Greater than or equal to 56' (16.8 m) and less than 65' (19.8 m)	21'-0" (6.4 m)	42" (1060mm)	36" (900mm)	16	8(25)
Greater than or equal to 65' (19.8 m) and up to 75' (22.9 m)	25'-0" (7.6 m)	42" (1060mm)	36" (900mm)	16	8(25)

NOTES:

1. These foundation depths are for sites which have cohesive soils (clayey silt, sandy clay, etc.) along the length of the shaft, with an average Unconfined Compressive Strength (Qu) > 1.0 tsf (100 kpa). This strength shall be verified by boring data prior to construction or with testing by the Engineer during foundation drilling. The Bureau of Bridges & structures should be contacted for a revised design if other conditions are encountered.
2. Combination mast arm assemblies under 55 feet (16.8 m) shall use 36" (900 mm) diameter foundations.
3. Combination mast arm assemblies under 56 feet (16.8 m) through 75 feet (22.9 m) shall use 42" (1060 mm) diameter foundations
4. For mast arm assemblies with dual arms refer to state standard 878001..

DEPTH OF MAST ARM FOUNDATIONS, TYPE E

TS SHT NO. 5

FILE NAME = S:\WP\Design\Iovan\SamplePlans\DGNFiles\TSExample01-sht-ts.dgn	USER NAME = plascencia1	DESIGNED -	REVISED -
		DRAWN -	REVISED -
	PLOT SCALE = 100.0000 ' / in.	CHECKED -	REVISED -
Default	PLOT DATE = 5/17/2016	DATE -	REVISED -

STATE OF ILLINOIS
DEPARTMENT OF TRANSPORTATION

DISTRICT ONE
STANDARD TRAFFIC SIGNAL DESIGN DETAILS

SCALE: NONE | SHEET 5 OF 7 SHEETS | STA. TO STA.

F.A.P. RTE.	SECTION	COUNTY	TOTAL SHEETS	SHEET NO.
3578	2019-001-R	COOK	255	119
	TS-05	CONTRACT NO. 62H82		
		ILLINOIS FED. AID PROJECT		

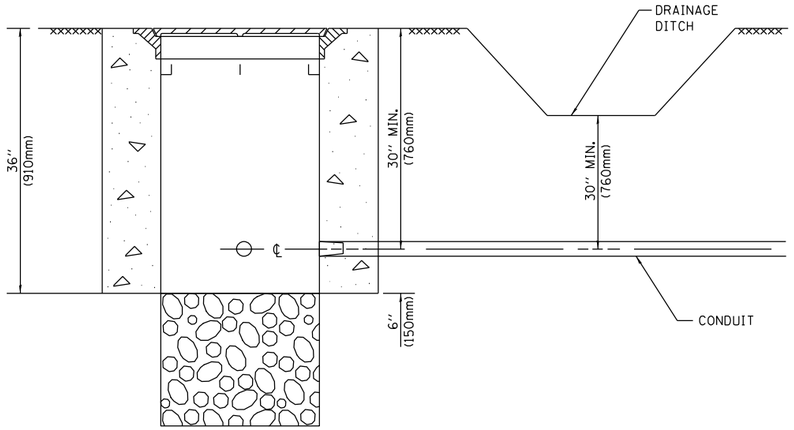

NOTES:

1. CONDUIT DEPTH SHALL BE A MINIMUM OF 30" (760mm) BELOW THE BOTTOM OF THE DRAINAGE DITCH OR ANY SLOPING GROUND
2. THE MINIMUM CONDUIT DEPTH APPLIES TO ALL CONDUIT PLACED UNDER ROADWAY PAVEMENT, MULTI-USE PATHS, SIDEWALKS AND SOIL SURFACES.
3. THE MINIMUM CONDUIT DEPTH APPLIES TO ALL HANDHOLES, HEAVY DUTY HANDHOLES AND DOUBLE HANDHOLES.

HANDHOLE WITH MINIMUM CONDUIT DEPTH

(NOT TO SCALE)

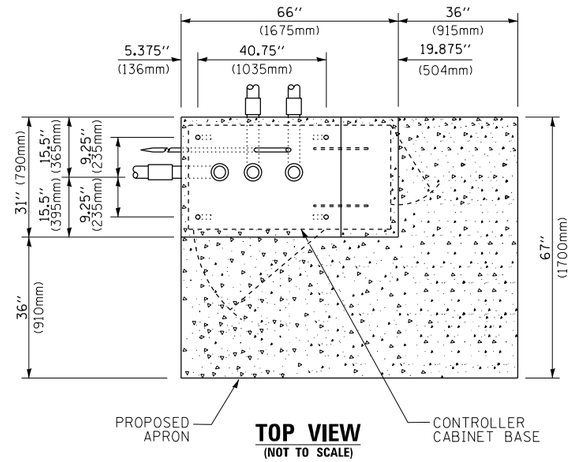

TOP VIEW

(NOT TO SCALE)

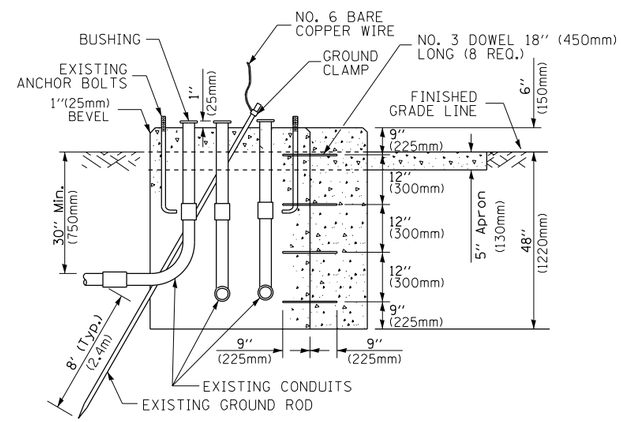

MODIFY EXISTING TYPE "D" FOUNDATION TO TYPE "C" FOUNDATION

(NOT TO SCALE)

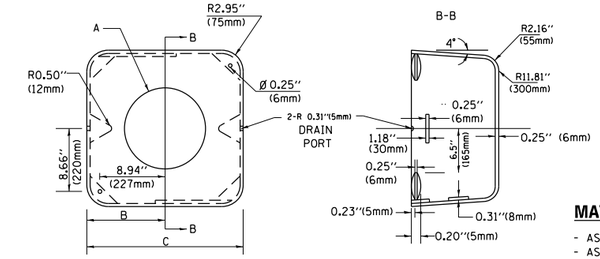

MATERIAL:

- ASTM A36 STEEL
- ASTM A-123 HOT DIPPED GALVANIZED

A	B	C	HEIGHT	WEIGHT
VARIES	9.5"(241mm)	19"(483mm)	7" (178mm) - 12" (300mm)	53 lbs (24kg)
VARIES	10.75"(273mm)	21.5"(546mm)	7" (178mm) - 12" (300mm)	68 lbs (31 kg)
VARIES	13.0"(330mm)	26"(660mm)	7" (178mm) - 12" (300mm)	81 lbs (37 kg)
VARIES	18.5"(470mm)	37"(940mm)	7" (178mm) - 12" (300mm)	126 lbs (57 kg)

SHROUD

NOTES:

1. DIMENSION "A" IS EQUAL TO THE DIAMETER OF THE MAST ARM POLE AT THE TOP OF THE SHROUD. THE SHROUD SHALL BE TIGHT TO THE MAST ARM POLE.
2. THE SUPPLIER SHALL VERIFIED THE ABOVE DIMENSIONS BASED ON MAST ARM REQUIREMENTS.
3. THE HEIGHT OF THE SHROUD SHALL COVER THE ANCHOR BOLTS, NUTS AND MAST ARM POLE BASE.

NOTE:

SUPPORT EXISTING CABINET AND CONTROL EQUIPMENT ABOVE FOUNDATION TO KEEP TRAFFIC SIGNAL FUNCTIONING WHILE FOUNDATION MODIFICATION WORK IS PROCEEDING.

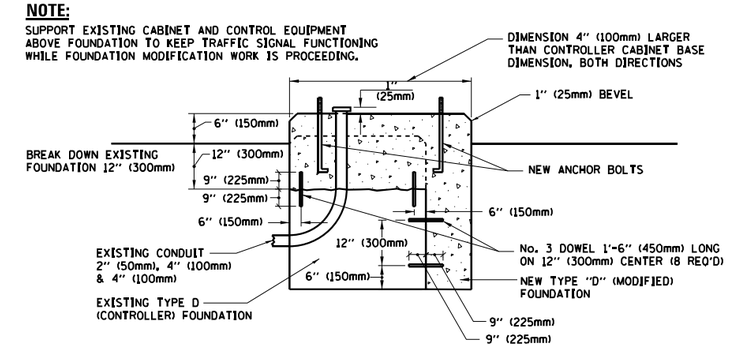

MODIFY EXISTING TYPE "D" FOUNDATION

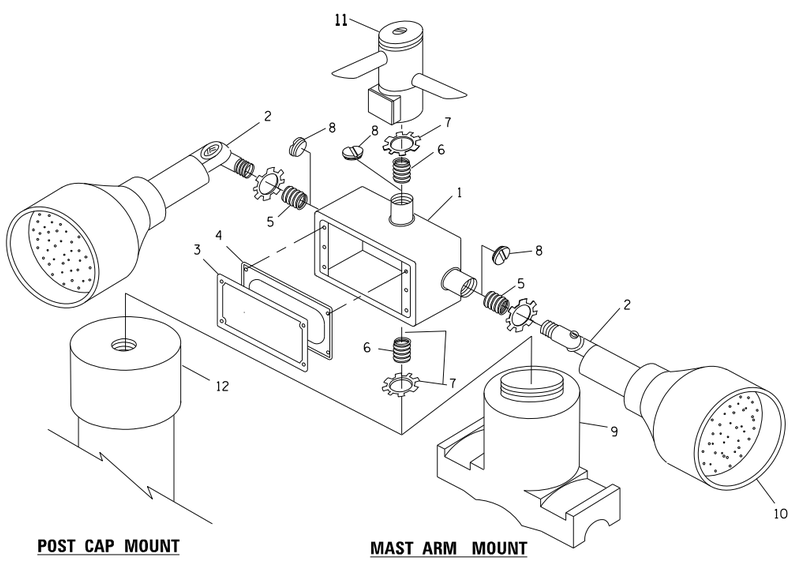

POST CAP MOUNT **MAST ARM MOUNT**

EMERGENCY VEHICLE DETECTOR WITH CONFIRMATION BEACON MOUNTING DETAIL

ITEM NO.	IDENTIFICATION
1	OUTLET BOX- GALV. 21 CU.IN. (0.000344 CU-M)
2	LAMP HOLDER AND COVER
3	OUTLET BOX COVER
4	RUBBER COVER GASKET
5	REDUCING BUSHING
6	3/4"(19 mm) CLOSE NIPPLE
7	3/4"(19 mm) LOCKNUT
8	3/4"(19 mm) HOLE PLUG
9	SADDLE BRACKET - GALV.
10	6 WATT PAR 38 LED FLOOD LAMP
11	DETECTOR UNIT
12	POST CAP [18 FT. (5.4 m) POST MIN.]

NOTES:

1. ALL ELECTRICAL ITEMS, EXCEPT ITEMS #2 AND #11 SHALL BE ALUMINUM OR GALVANIZED
2. ITEM #1- OZ/GEDNEY FSX-1-50 OR EQUIVALENT
   ITEM #2- MULBERRY CON-O-SHADE LAMP SHIELD OR EQUIVALENT
   ITEM #9- "BAND-IT" SADDLE BRACKET OR EQUIVALENT
3. WHEN POST MOUNTING IS SPECIFIED, ITEM #9 SHALL NOT BE REQUIRED. THE DETECTION UNIT SHALL BE MOUNTED DIRECTLY ON TOP OF THE CAP BY DRILLING AND TAPPING A 3/4 "(19 mm) HOLE WITH PIPE THREADS. THE POST CAP SHALL EITHER BE SCREWED TO THE TOP OF THE POST OR A MINIMUM OF 3 TIGHTENING SCREWS SHALL BE REQUIRED ON EACH CAP.

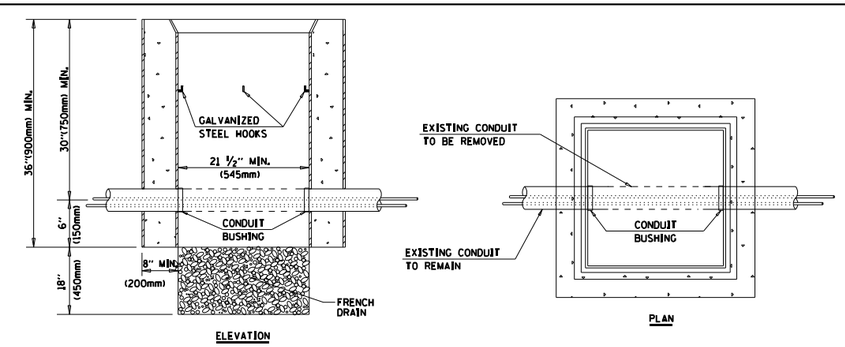

NOTES:

1. HANDHOLE CONSTRUCTED PER STATE STANDARD 814001.
2. REMOVAL OF THE EXISTING CONDUIT FROM THE HANDHOLE AND THE INSTALLATION OF THE CONDUIT BUSHINGS SHALL BE INCLUDED WITH THE COST OF THE HANDHOLE.

HANDHOLE TO INTERCEPT EXISTING CONDUIT

TS SHT NO. 6

FILE NAME =	USER NAME = plascencia	DESIGNED -	REVISED -
S:\WP\Design\Iovan\SamplePlans\DGNFiles\TSExample01-sht-ts.dgn		DRAWN -	REVISED -
		PLOT SCALE = 100.0000 ' / in.	CHECKED -	REVISED -
Default		PLOT DATE = 5/17/2016	DATE -	REVISED -

STATE OF ILLINOIS
DEPARTMENT OF TRANSPORTATION

DISTRICT ONE
STANDARD TRAFFIC SIGNAL DESIGN DETAILS

SCALE: NONE | SHEET 6 OF 7 SHEETS | STA. TO STA.

F.A.P. RTE.	SECTION	COUNTY	TOTAL SHEETS	SHEET NO.
3578	2019-001-R	COOK	255	120
	TS-05	CONTRACT NO. 62H82		
		ILLINOIS FED. AID PROJECT		

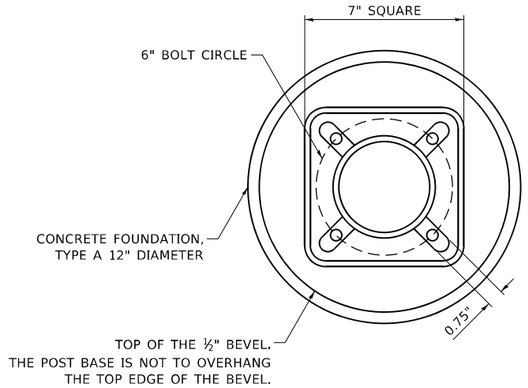

BOLT PATTERN

NOTE:

1. IF THE PEDESTRIAN SIGNAL POST FOUNDATION IS INSTALLED WITHIN OR BEHIND A BARRIER CURB, THE TOP OF THE FOUNDATION SHALL BE INSTALLED FLUSH WITH THE TOP OF THE BARRIER CURB.

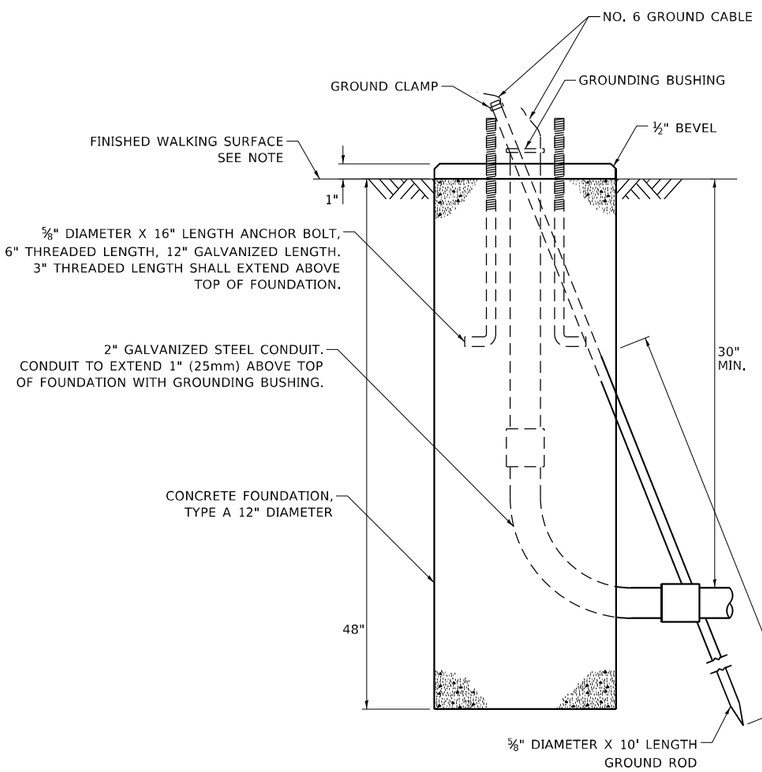

CONCRETE FOUNDATION, TYPE A 12-INCH DIAMETER

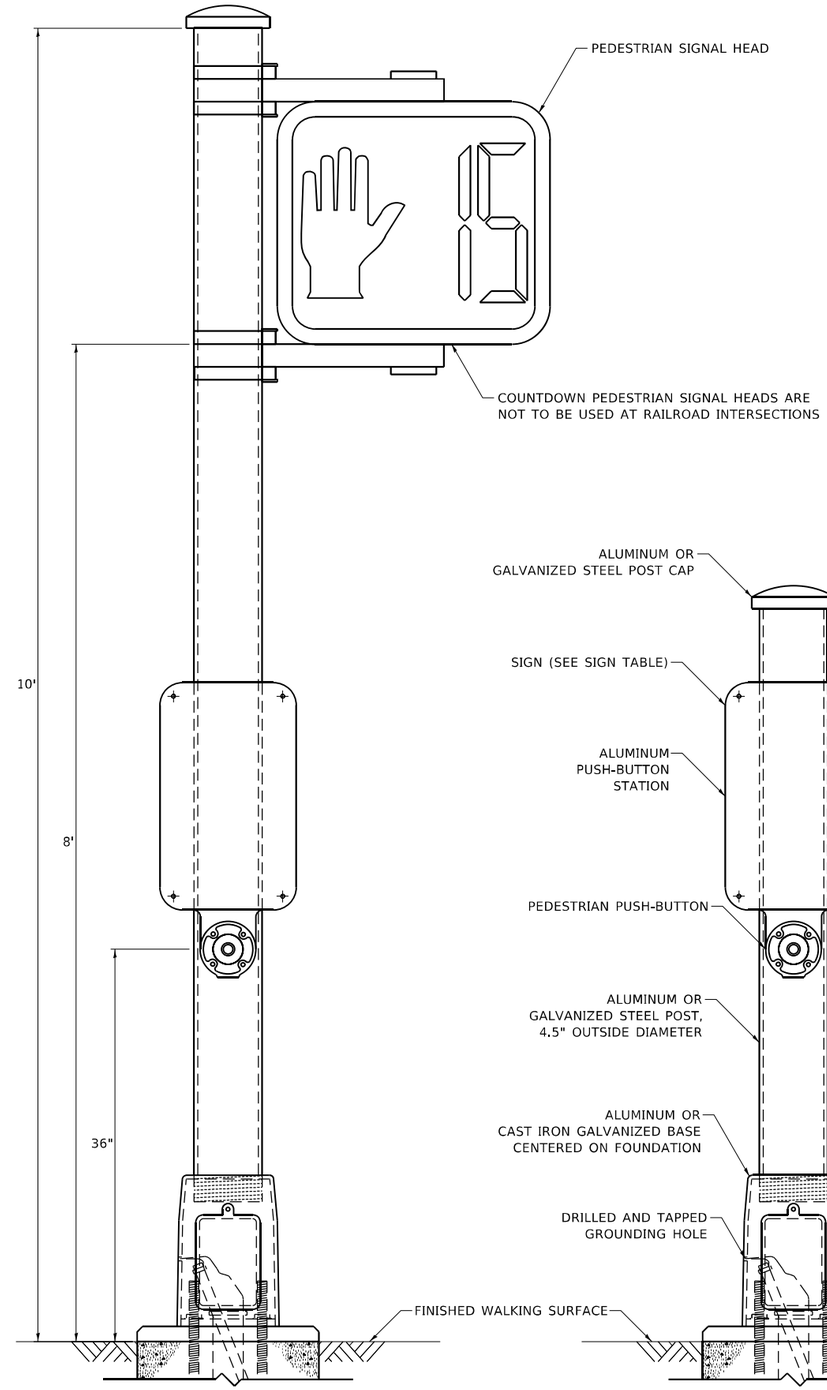

PEDESTRIAN SIGNAL POST, 10 FT.

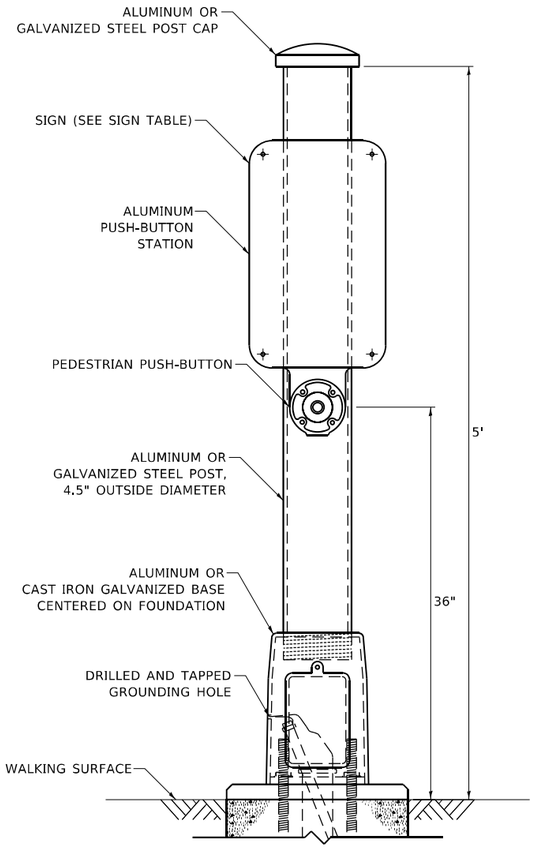

PEDESTRIAN SIGNAL POST, 5 FT.

R10-3b R10-3d R10-3e

SIGN TABLE

SIGN	DIMENSIONS
R10-3b (RAILROAD ONLY)	9" X 12"
R10-3d (RAILROAD ONLY)	9" X 12"
R10-3e	9" X 15"

NOTES:

1. THE SIGN PANELS SHALL BE TYPE AP SHEETING.
2. THE ARROW ON SIGNS FOR PUSH-BUTTONS SERVING TWO DIRECTIONS ON THE SAME PHASE SHALL BE BI-DIRECTIONAL.
3. THE SIGN FOR DUAL-CALL PUSH-BUTTONS SHALL HAVE NO ARROW.

MODEL: Default
FILE NAME: S:\WP\Design\ovsn11_Other\PedestrianPost\PedestrianSignalPost_WorkingFile-2020-NOT-USE.dgn

USER NAME = plascenciai	DESIGNED - IP	REVISED - 10/15/2020	
	DRAWN - IP	REVISED -	
PLOT SCALE = 100.0000 ' / in.	CHECKED - LP	REVISED -	
PLOT DATE = 11/17/2020	DATE - 10/15/2018	REVISED -	

STATE OF ILLINOIS
DEPARTMENT OF TRANSPORTATION

DISTRICT ONE
STANDARD TRAFFIC SIGNAL DESIGN DETAILS

SCALE: NTS | SHEET NO. 7 OF 7 SHEETS | STA. TO STA.

F.A. RTE.	SECTION	COUNTY	TOTAL SHEETS	SHEET NO.
3578	2019-001-R	COOK	255	121
	TS-05	CONTRACT NO. 62H82		
		ILLINOIS FED. AID PROJECT		

SIGN PANEL – TYPE 1 OR TYPE 2

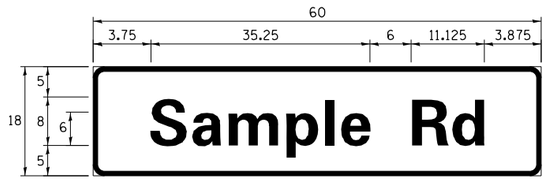

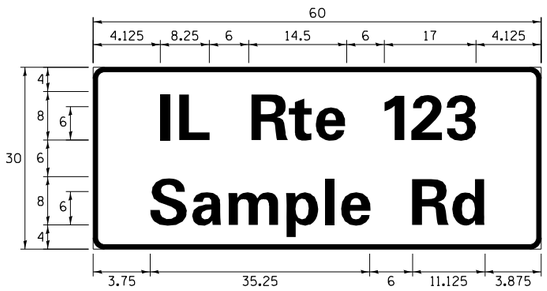

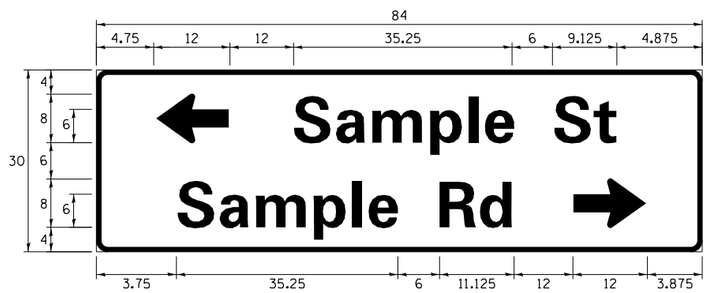

DESIGN SERIES	AREA (SQ FT)	SIGN PANEL TYPE	SHEETING TYPE	QTY. REQUIRED
D OR C	-	1 OR 2	ZZ	-

ALL DIMENSIONS ARE IN INCHES EXCEPT NOTED OTHERWISE

COMMON STREET NAME ABBREVIATIONS AND WIDTHS

NAME	ABBREVATION	WIDTH (INCH)	
		SERIES "C"	SERIES "D"
AVENUE	Ave	15.000	18.250
BOULEVARD	Blvd	17.125	20.000
CIRCLE	Cir	11.125	13.000
COURT	Ct	8.250	9.625
DRIVE	Dr	8.625	10.125
HIGHWAY	Hwy	18.375	22.000
ILLINOIS	IL	7.000	8.250
LANE	Ln	9.125	10.750
PARKWAY	Pkwy	23.375	27.375
PLACE	Pl	7.125	7.750
ROAD	Rd	9.625	11.125
ROUTE	Rte	12.625	14.500
STREET	St	8.000	9.125
TERRACE	Ter	12.625	14.625
TRAIL	Tr	7.750	9.125
UNITED STATES	US	10.375	12.250

GENERAL NOTES

1. WHERE MAST ARM MOUNTED STREET NAME SIGNS ARE SPECIFIED, THE MAST ARM ASSEMBLY AND POLES SHALL BE DESIGNED TO SUPPORT THE LOADINGS CALLED FOR ON STANDARDS 877001, 877002, 877006, 877011 AND 877012, AS APPLICABLE, PLUS TWO (2) SIGN PANELS 2'-6" x 8'-0" MOUNTED AS SHOWN. THE DESIGN SHALL BE IN ACCORDANCE WITH THE REQUIREMENTS OF THE CURRENT "STANDARD SPECIFICATIONS FOR STRUCTURAL SUPPORTS FOR HIGHWAY SIGNS, LUMINAIRES, AND TRAFFIC SIGNALS" AS PUBLISHED BY THE AMERICAN ASSOCIATION OF STATE HIGHWAY AND TRANSPORTATION OFFICIALS FOR 80 M.P.H. WIND VELOCITY.
2. ALL SIGNS SHALL CONSIST OF A WHITE LEGEND AND BORDER (TYPE ZZ SHEETING) ON A GREEN BACKGROUND (TYPE ZZ SHEETING)
3. THE SIGN LENGTH SHALL BE IN 6-INCH INCREMENTS, BUT THE OVERALL LENGTH SHALL NOT EXCEED 8'-0". ALL BORDERS SHALL BE ¾" WIDE. CORNER RADIUS SHALL BE 1-7/8". THE SPACING BETWEEN THE WORDS SHOULD BE 6", IF POSSIBLE, BUT MAY BE REDUCED TO 5" WHEN SPACING IS CRITICAL. A MINIMUM OF 2-1/2" SHALL BE INCLUDED BETWEEN THE WORD AND THE RIGHT AND LEFT EDGES OF THE SIGN.
4. A PREFERRED METHOD FOR THE SIGN DESIGN IS TO USE SERIES "D" LETTER ON A ONE-LINE SIGN 18" IN HEIGHT AND A MAXIMUM OF 8'-0" IN WIDTH. IF SERIES "D" DOES NOT FIT ON A 8'-0" SIGN, THEN SERIES "C" SHOULD BE TRIED. IF SERIES "C" DOES NOT FIT ON A 8'-0" SIGN, A 30" HIGH TWO-LINE SIGN CAN BE USED. THE CROSSROAD DESIGNATION AS TO STREET, AVENUE, ETC. SHOULD BE SPELLED OUT ON THE SECOND LINE, IF THE ABBREVIATION CANNOT FIT ON THE FIRST LINE.
5. LED ILLUMINATED STREET NAME SIGNS CAN BE USED IN PLACE OF REGULAR SIGN PANELS BUT ANY SPECIAL WORDING AND SYMBOLOGY MUST BE APPROVED BY THE DEPARTMENT. GENERAL DESIGN REQUIREMENT AS LISTED ABOVE (COLOR, FONT, SIZE, ETC.) MUST BE FOLLOWED.
6. SIGNFIX ALUMINUM CHANNEL FRAMING SYSTEM SHALL BE USED FOR ALL SIGNS ATTACHED TO SIGNAL POLES AND POSTS.

LOCAL SUPPLIERS:	PARTS LISTING:	
- J.O. HERBERT COMPANY, INC MIDLOTHIAN, VA	SIGN CHANNEL	PART #HPN053 (MED. CHANNEL)
	SIGN SCREWS	1/4" x 14 x 1" H.W.H. #3 SELF TAPPING WITH NEOPRENE WASHER
- WESTERN REMAC, INC. WOODRIDGE, IL	BRACKETS	PART #HPN034 (UNIVERSAL) CHANNEL CLAMPS WITH STAINLESS STEEL STRAPPING

OTHER BRANDS OF MOUNTING HARDWARE ARE ACCEPTABLE, BASED UPON THE DEPARTMENT'S APPROVAL AND COMPATIBILITY WITH THE CHANNEL/BRACKET OF THE ABOVE PRODUCT.

MOUNTING LOCATION

ARM OR POLE MOUNTED

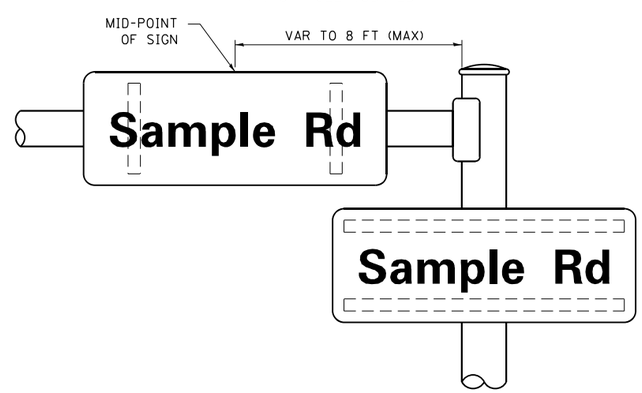

SUPPORTING CHANNELS

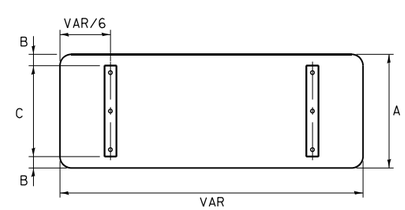

A	B	C
18"	2"	14"
30"	2"	24"

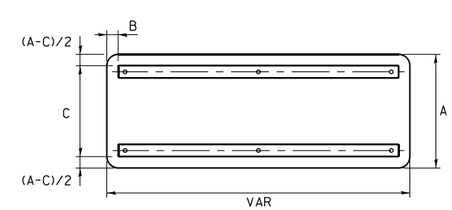

A	B	C
18"	2"	12"
30"	2"	22"

STANDARD ALPHABETS SPACING CHART

(8") UPPER CASE AND (6") LOWER CASE

FHWA SERIES "C"				FHWA SERIES "D"			
CHARACTER	LEFT SPACING (INCH)	WIDTH (INCH)	RIGHT SPACING (INCH)	CHARACTER	LEFT SPACING (INCH)	WIDTH (INCH)	RIGHT SPACING (INCH)
A	0.240	5.122	0.240	A	0.240	6.804	0.240
B	0.880	4.482	0.480	B	0.960	5.446	0.400
C	0.720	4.482	0.720	C	0.800	5.446	0.800
D	0.880	4.482	0.720	D	0.960	5.446	0.800
E	0.880	4.082	0.480	E	0.960	4.962	0.400
F	0.880	4.082	0.240	F	0.960	4.962	0.240
G	0.720	4.482	0.720	G	0.800	5.446	0.800
H	0.880	4.482	0.880	H	0.960	5.446	0.960
I	0.880	1.120	0.880	I	0.960	1.280	0.960
J	0.240	4.082	0.880	J	0.240	5.122	0.960
K	0.880	4.482	0.480	K	0.960	5.604	0.400
L	0.880	4.082	0.240	L	0.960	4.962	0.240
M	0.880	5.284	0.880	M	0.960	6.244	0.960
N	0.880	4.482	0.880	N	0.960	5.446	0.960
O	0.720	4.722	0.720	O	0.800	5.684	0.800
P	0.880	4.482	0.720	P	0.960	5.446	0.240
Q	0.720	4.722	0.720	Q	0.800	5.684	0.800
R	0.880	4.482	0.480	R	0.960	5.446	0.400
S	0.480	4.482	0.480	S	0.400	5.446	0.400
T	0.240	4.082	0.240	T	0.240	4.962	0.240
U	0.880	4.482	0.880	U	0.960	5.446	0.960
V	0.240	4.962	0.240	V	0.240	6.084	0.240
W	0.240	6.084	0.240	W	0.240	7.124	0.240
X	0.240	4.722	0.240	X	0.400	5.446	0.400
Y	0.240	5.122	0.240	Y	0.240	6.884	0.240
Z	0.480	4.482	0.480	Z	0.400	5.446	0.400
a	0.320	3.842	0.640	a	0.400	4.562	0.720
b	0.720	4.082	0.480	b	0.800	4.802	0.480
c	0.480	4.002	0.240	c	0.480	4.722	0.240
d	0.480	4.082	0.720	d	0.480	4.802	0.800
e	0.480	4.082	0.320	e	0.480	4.722	0.320
f	0.320	2.480	0.160	f	0.320	2.882	0.160
g	0.480	4.082	0.720	g	0.480	4.802	0.800
h	0.720	4.082	0.640	h	0.800	4.722	0.720
i	0.720	1.120	0.720	i	0.800	1.280	0.800
j	0.000	2.320	0.720	j	0.000	2.642	0.800
k	0.720	4.322	0.160	k	0.800	5.122	0.160
l	0.720	1.120	0.720	l	0.800	1.280	0.800
m	0.720	6.724	0.640	m	0.800	7.926	0.720
n	0.720	4.082	0.640	n	0.800	4.722	0.720
o	0.480	4.082	0.480	o	0.480	4.882	0.480
p	0.720	4.082	0.480	p	0.800	4.802	0.480
q	0.480	4.082	0.720	q	0.480	4.802	0.800
r	0.720	2.642	0.160	r	0.800	3.042	0.160
s	0.320	3.362	0.240	s	0.320	3.762	0.240
t	0.080	2.882	0.080	t	0.080	3.202	0.080
u	0.640	4.082	0.720	u	0.720	4.722	0.800
v	0.160	4.722	0.160	v	0.160	5.684	0.160
w	0.160	7.524	0.160	w	0.160	9.046	0.160
x	0.000	5.202	0.000	x	0.000	6.244	0.000
y	0.160	4.962	0.160	y	0.160	6.004	0.160
z	0.240	3.362	0.240	z	0.240	4.002	0.240
1	0.720	1.680	0.880	1	0.800	2.000	0.960
2	0.480	4.482	0.480	2	0.800	5.446	0.800
3	0.480	4.482	0.480	3	1.440	5.446	0.800
4	0.240	4.962	0.720	4	0.160	6.004	0.960
5	0.480	4.482	0.480	5	0.800	5.446	0.800
6	0.720	4.482	0.720	6	0.800	5.446	0.800
7	0.240	4.482	0.720	7	0.560	5.446	0.560
8	0.480	4.482	0.480	8	0.800	5.446	0.800
9	0.480	4.482	0.480	9	0.800	5.446	0.800
0	0.720	4.722	0.720	0	0.800	5.684	0.800
-	0.240	2.802	0.240	-	0.240	2.802	0.240

TS SHT NO. 8

FILE NAME =	USER NAME = plascencia	DESIGNED - LP/IP	REVISED - LP 07/01/2015
S:\WP\Design\Ivan\SamplePlans\DGNFiles\	TSExample01-sht-ts.dgn	DRAWN - LP	REVISED -
	PLOT SCALE = 100.0000 ' / in.	CHECKED - IP	REVISED -
Default	PLOT DATE = 5/17/2016	DATE - 10/01/2014	REVISED -

STATE OF ILLINOIS
DEPARTMENT OF TRANSPORTATION

DISTRICT ONE
MAST ARM MOUNTED STREET NAME SIGNS

SCALE: SHEET OF SHEETS STA. TO STA.

F.A.P. RTE.	SECTION	COUNTY	TOTAL SHEETS	SHEET NO.
3578	2019-001-R	COOK	255	122
	TS-02	CONTRACT NO. 62H82		
		ILLINOIS FED. AID PROJECT		

REMOVAL AND RELOCATION NOTES:

THE FOLLOWING ITEMS SHALL BE REMOVED BY THE CONTRACTOR AND SHALL BE DISPOSED OF BY THEM OUTSIDE THE RIGHT-OF-WAY AT THEIR EXPENSE. THE SALVAGE VALUE OF THE REMOVED EQUIPMENT SHALL BE REFLECTED IN THE CONTRACT BID PRICE.

1	EACH	CONTROLLER AND CABINET (COMPLETE)
4	EACH	STEEL MAST ARM ASSEMBLY AND POST
4	EACH	TRAFFIC SIGNAL POST
4	EACH	3-SECTION SIGNAL HEAD
8	EACH	5-SECTION SIGNAL HEAD
1	EACH	SERVICE INSTALLATION
4	EACH	TRAFFIC SIGNAL BACKPLATE

THE FOLLOWING EXISTING TRAFFIC SIGNAL EQUIPMENT SHALL BE REMOVED BY THE CONTRACTOR AND SHALL REMAIN THE PROPERTY OF THE AGENCY LISTED BELOW. THE CONTRACTOR SHALL SAFELY STORE AND ARRANGE FOR THE PICK UP OF ALL THE EQUIPMENT TO BE RETURNED TO THE LISTED AGENCY.

NAME OF AGENCY: VILLAGE OF ORLAND PARK
CONTACT PERSON: JOEL VAN ESSEN
DEPARTMENT: PUBLIC WORKS
PHONE NUMBER: (708) 403-6350

2	EACH	LIGHT DETECTOR
1	EACH	LIGHT DETECTOR AMPLIFIER

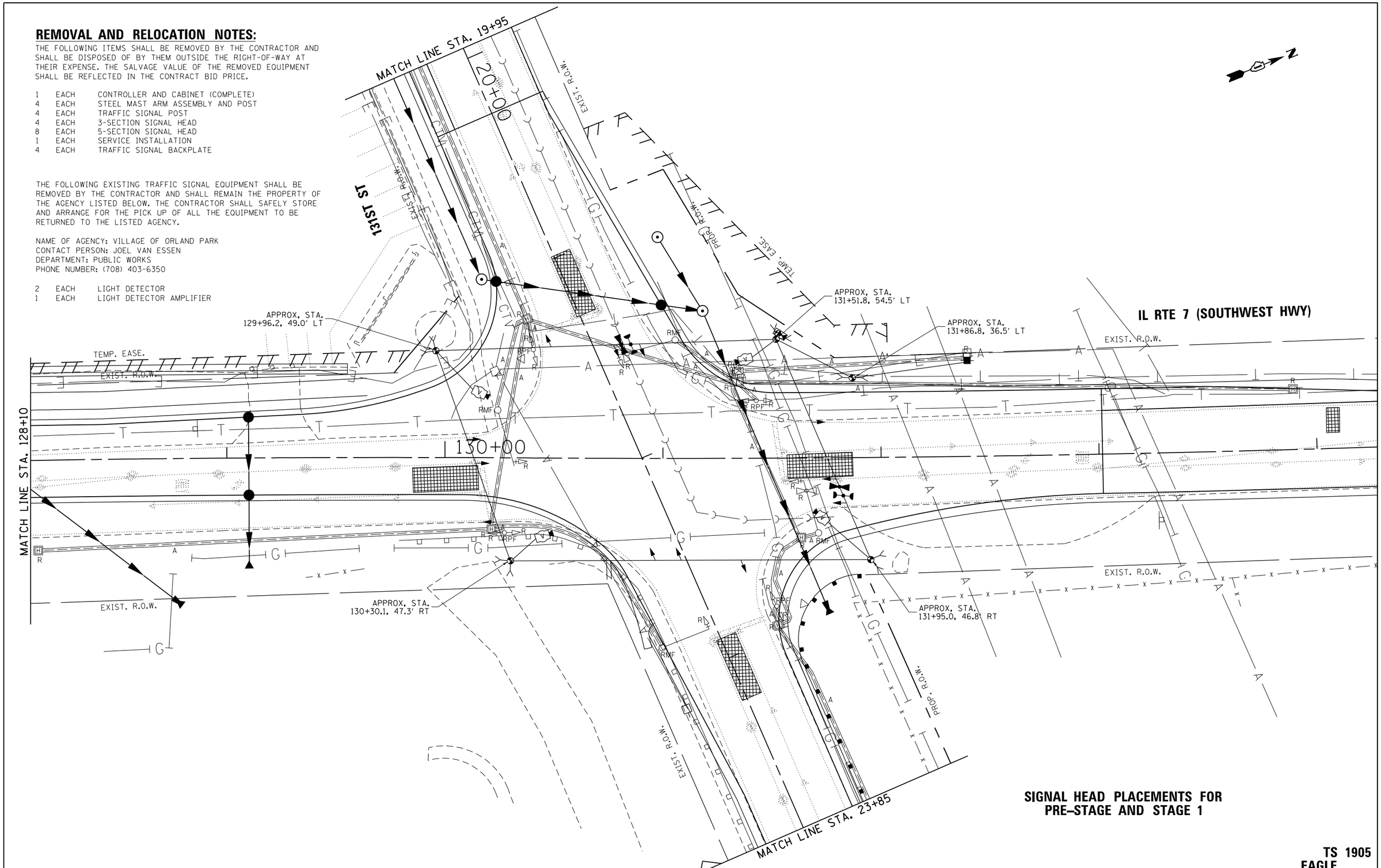

SIGNAL HEAD PLACEMENTS FOR PRE-STAGE AND STAGE 1

TS 1905
EAGLE

GANDHI AND ASSOCIATES, INC. ENGINEERS AND PLANNERS 6035 N. NORTHWEST HIGHWAY SUITE 306 CHICAGO, ILLINOIS 60631 TEL:(773)774-5910	USER NAME = $USER$	DESIGNED - EA	REVISED -	STATE OF ILLINOIS DEPARTMENT OF TRANSPORTATION
		DRAWN - EA, AV	REVISED -	
	PLOT SCALE = 40.0000 ' / in.	CHECKED - NT, AV	REVISED -	
	PLOT DATE = $DATE$	DATE - 10/27/2022	REVISED -	

TEMPORARY TRAFFIC SIGNAL INSTALLATION PLAN AND REMOVE EXISTING TRAFFIC SIGNAL EQUIPMENT PLAN IL RTE 7 (SOUTHWEST HWY) AT 131ST ST (SHEET 1 OF 2)

SCALE: 1"=20' | SHEET NO. OF SHEETS | STA. TO STA.

F.A.U. RTE.	SECTION	COUNTY	TOTAL SHEETS	SHEET NO.
3578	2019-001-R	COOK	255	123

CONTRACT NO. 62H82

FED. ROAD DIST. NO. _ | ILLINOIS | FED. AID PROJECT

FILE NAME = K:\PROJECTS\Projects 2019\PTB 191_Item 84_IL Rte 7\CADD_Sheets\09_SOUTHWEST HWY @ 131ST STREET_TEMP_INT.dgn

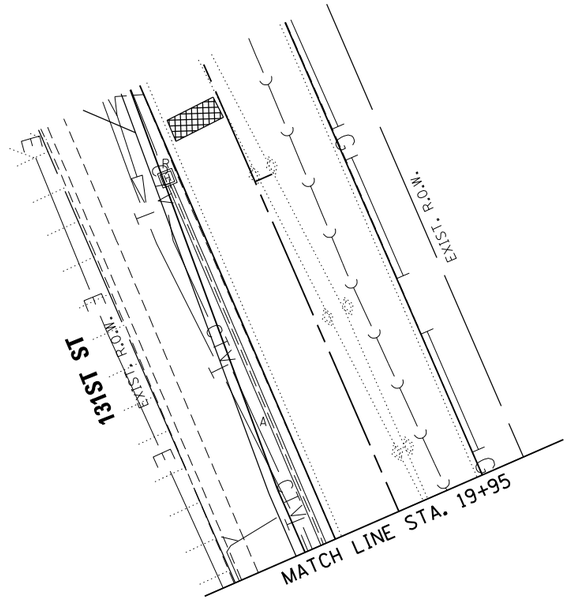

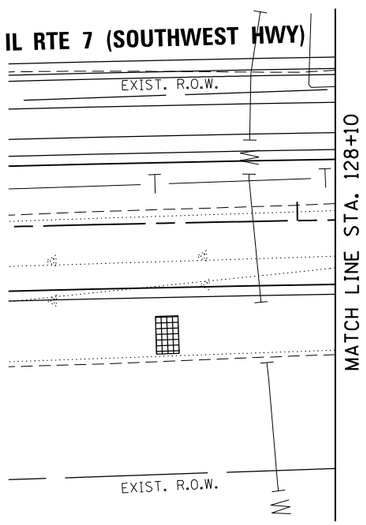

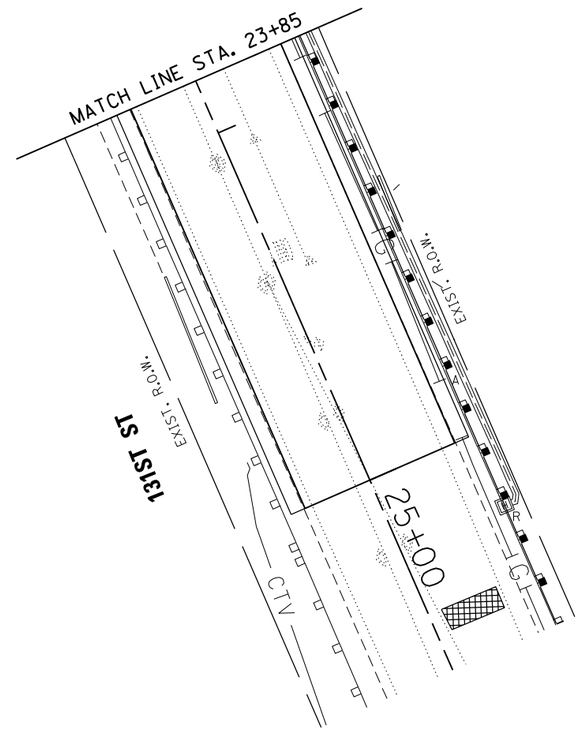

TS 1905
EAGLE

GANDHI AND ASSOCIATES, INC. ENGINEERS AND PLANNERS 5035 N. NORTHWEST HIGHWAY SUITE 306 CHICAGO, ILLINOIS 60630 TEL.(773)774-5980	USER NAME = $USER$	DESIGNED - EA	REVISED -	STATE OF ILLINOIS DEPARTMENT OF TRANSPORTATION	TEMPORARY TRAFFIC SIGNAL INSTALLATION PLAN AND REMOVE EXISTING TRAFFIC SIGNAL EQUIPMENT PLAN IL RTE 7 (SOUTHWEST HWY) AT 131ST ST (SHEET 2 OF 2)	F.A.U. RTE.	SECTION	COUNTY	TOTAL SHEETS	SHEET NO.
		DRAWN - EA, AV	REVISED -			3578	2019-001-R	COOK	255	124
	PLOT SCALE = 40.0000 ' / in.	CHECKED - NT, AV	REVISED -					CONTRACT NO. 62H82		
	PLOT DATE = $DATE$	DATE - 10/27/2022	REVISED -		SCALE: 1"=20' SHEET NO. OF SHEETS STA. TO STA.	FED. ROAD DIST. NO. _	ILLINOIS	FED. AID PROJECT		

FILE NAME = K:\PROJECTS\Projects 2019\PTB 191_Item 04_IL Rte 7\CADD_Sheets\10_SOUTHWEST HWY @ 131ST STREET_TEMP_INT_2.dgn

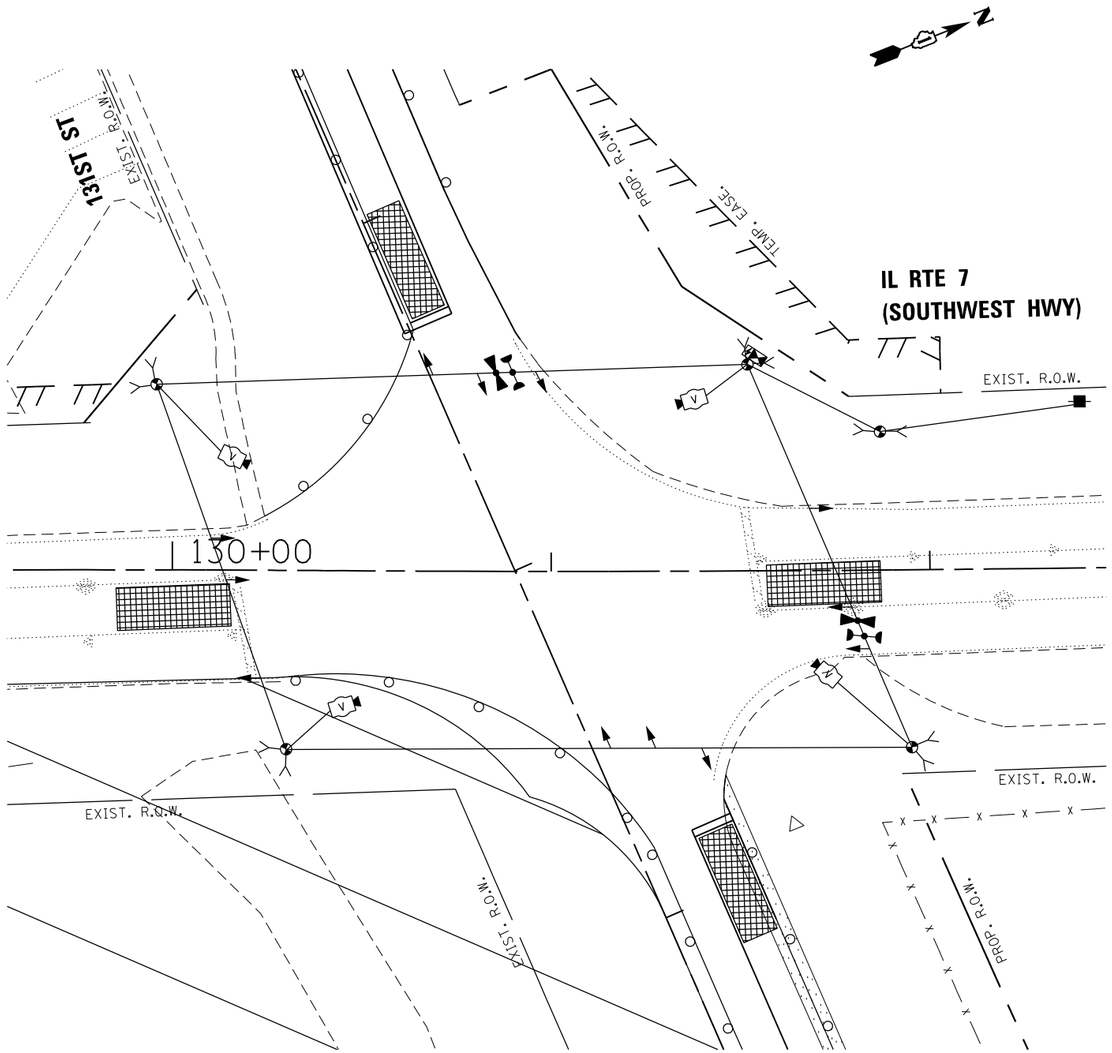

SIGNAL HEAD PLACEMENTS FOR STAGE 1A

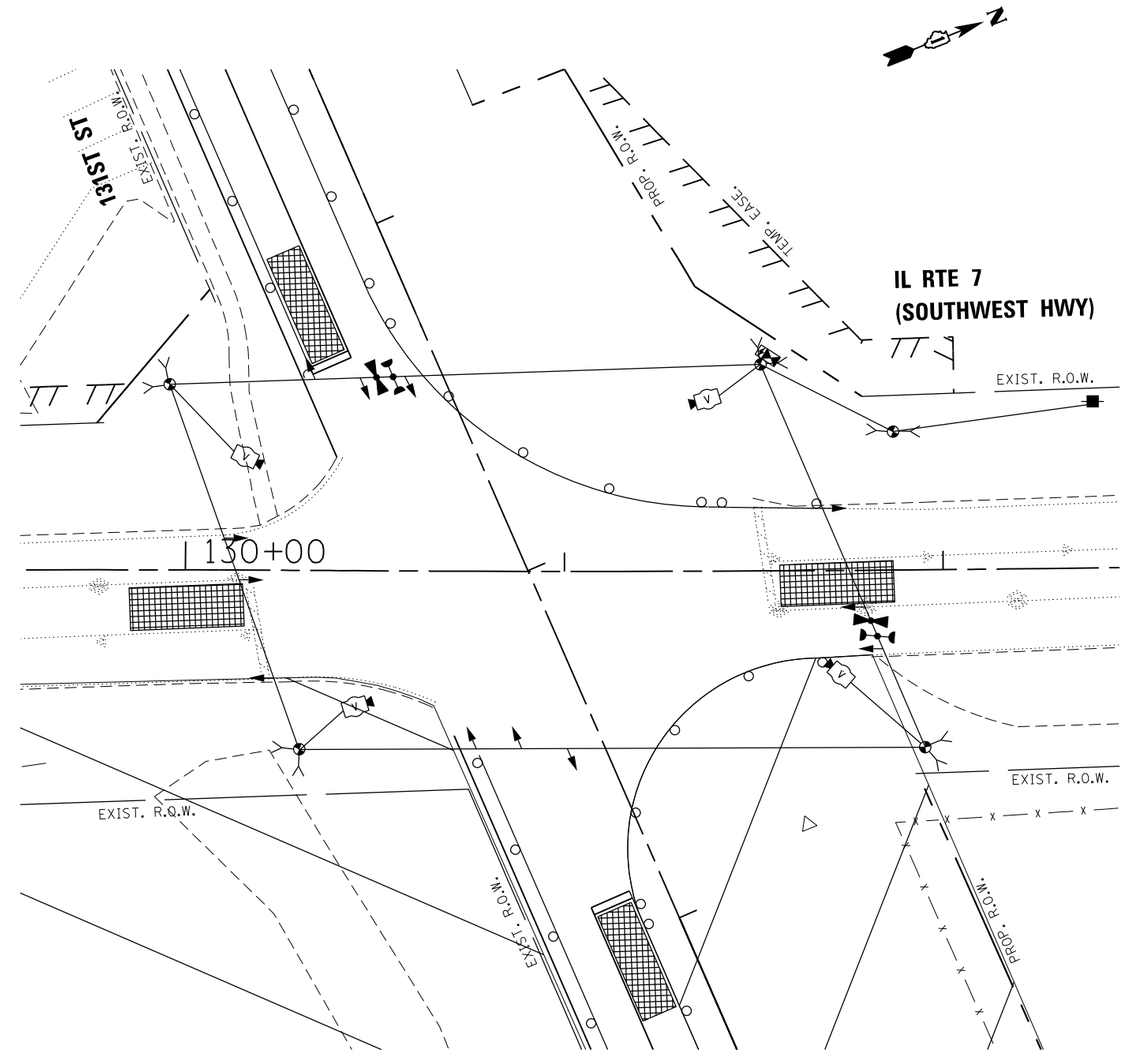

SIGNAL HEAD PLACEMENTS FOR STAGE 1B

NOTES:

1. THE GREEN AND YELLOW LEFT TURN ARROW INDICATION SECTIONS IN THE 5-SECTION SIGNAL HEADS FOR THE EASTBOUND AND WESTBOUND DIRECTIONS OF TRAFFIC SHALL BE DISCONNECTED AND BAGGED DURING CONSTRUCTION STAGE 1A AND STAGE 1B.

2. THE FAR OUT VIDEO DETECTION ZONES SHALL BE REDEFINED FOR EACH CONSTRUCTION STAGE AS A PART OF "TEMPORARY TRAFFIC SIGNAL INSTALLATION" WORK.

TS 1905
EAGLE

GANDHI AND ASSOCIATES, INC. ENGINEERS AND PLANNERS 6035 N. NORTHWEST HIGHWAY SUITE 306 CHICAGO, ILLINOIS 60631 TEL:773/774-5910	USER NAME = $USER$	DESIGNED - EA	REVISED -	STATE OF ILLINOIS DEPARTMENT OF TRANSPORTATION	TEMPORARY TRAFFIC SIGNAL INSTALLATION PLAN IL RTE 7 (SOUTHWEST HWY) AT 131ST ST	F.A.U. RTE.	SECTION	COUNTY	TOTAL SHEETS	SHEET NO.
		DRAWN - EA, AV	REVISED -			3578	2019-001-R	COOK	255	125
	PLOT SCALE = 40.0000 ' / in.	CHECKED - NT, AV	REVISED -					CONTRACT NO. 62H82		
	PLOT DATE = $DATE$	DATE - 10/27/2022	REVISED -		SCALE: 1"=20' SHEET NO. OF SHEETS STA. TO STA.	FED. ROAD DIST. NO. -	ILLINOIS	FED. AID PROJECT		

FILE NAME = K:\PROJECTS\Projects 2019\PTB 191.Item 84.IL Rte 7\CADD.Sheets\10A.SOUTHWEST HWY @ 131ST STREET_TEMP.INT.3.dgn

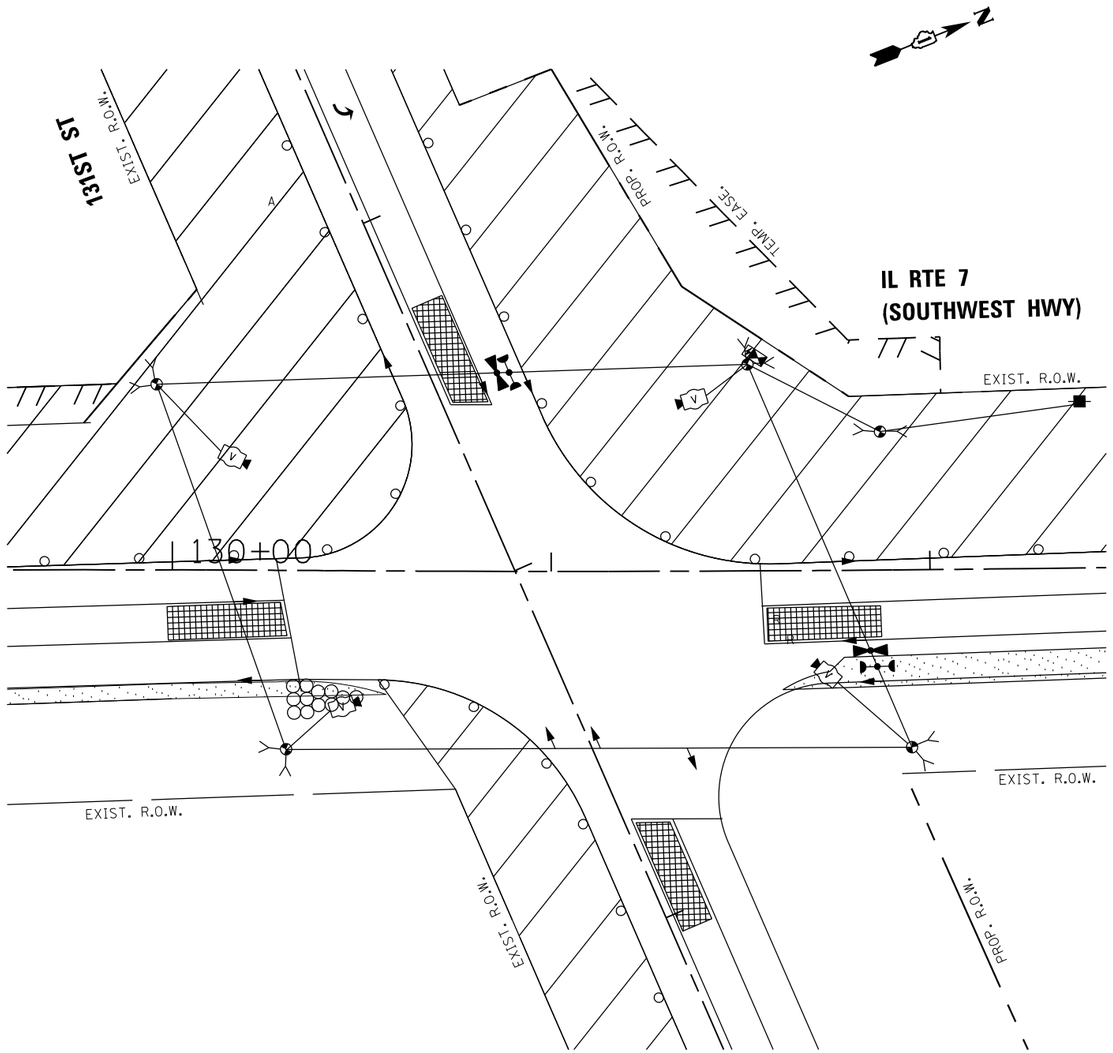

SIGNAL HEAD PLACEMENTS FOR STAGE 2

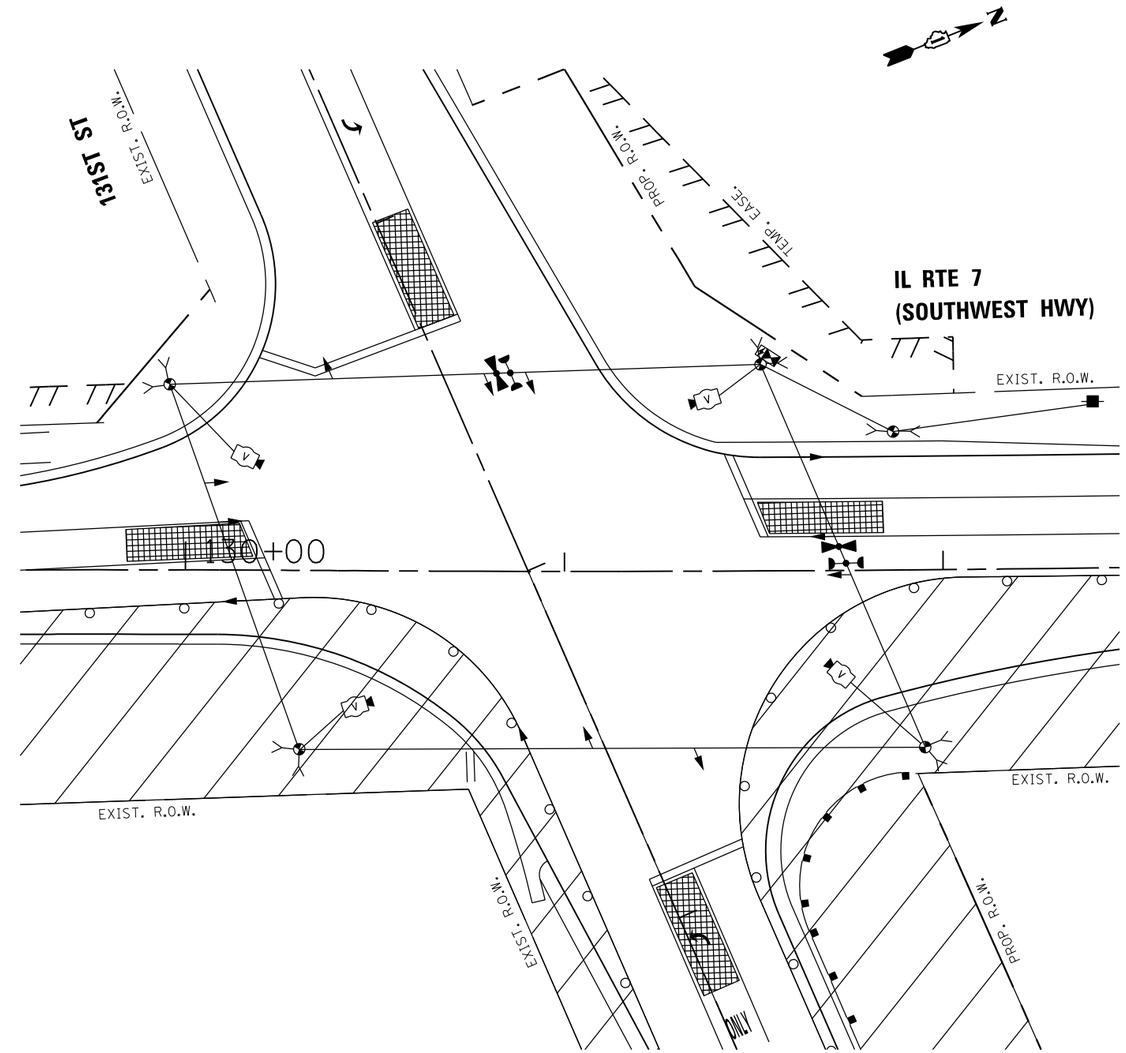

SIGNAL HEAD PLACEMENTS FOR STAGE 3

NOTES:

1. THE FAR OUT VIDEO DETECTION ZONES SHALL BE REDEFINED FOR EACH CONSTRUCTION STAGE AS A PART OF "TEMPORARY TRAFFIC SIGNAL INSTALLATION" WORK.

TS 1905
EAGLE

GANDHI AND ASSOCIATES, INC. ENGINEERS AND PLANNERS 6035 N. NORTHWEST HIGHWAY SUITE 306 CHICAGO, ILLINOIS 60631 TEL.:773/774-5910	USER NAME = $USER$	DESIGNED - EA	REVISED -	STATE OF ILLINOIS DEPARTMENT OF TRANSPORTATION	TEMPORARY TRAFFIC SIGNAL INSTALLATION PLAN IL RTE 7 (SOUTHWEST HWY) AT 131ST ST	F.A.U. RTE.	SECTION	COUNTY	TOTAL SHEETS / SHEET NO.
		DRAWN - EA, AV	REVISED -			3578	2019-001-R	COOK	255 / 126
	PLOT SCALE = 40.0000 ' / in.	CHECKED - NT, AV	REVISED -					CONTRACT NO. 62H82	
	PLOT DATE = $DATE$	DATE - 10/27/2022	REVISED -		SCALE: 1"=20' / SHEET NO. OF SHEETS / STA. TO STA.	FED. ROAD DIST. NO. _	ILLINOIS	FED. AID PROJECT	

FILE NAME = K:\PROJECTS\Projects 2019\PTB 191_Item 04_IL Rte 7\CADD_Sheets\11_SOUTHWEST HWY @ 131ST STREET_TEMP_INT_4.dgn

TEMPORARY CONTROLLER SEQUENCE

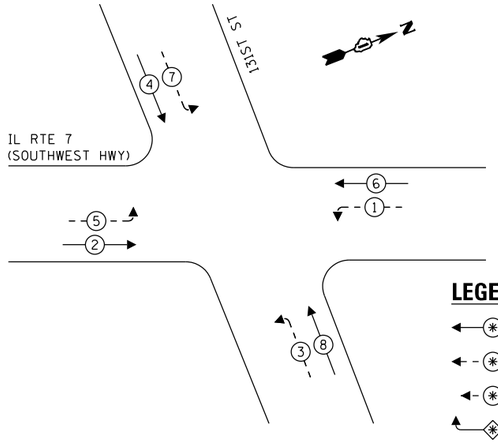

LEGEND:

- PROTECTED PHASE
- PROTECTED/PERMITTED PHASE
- PEDESTRIAN PHASE
- OL OVERLAP

TEMPORARY EMERGENCY VEHICLE PREEMPTION SEQUENCE

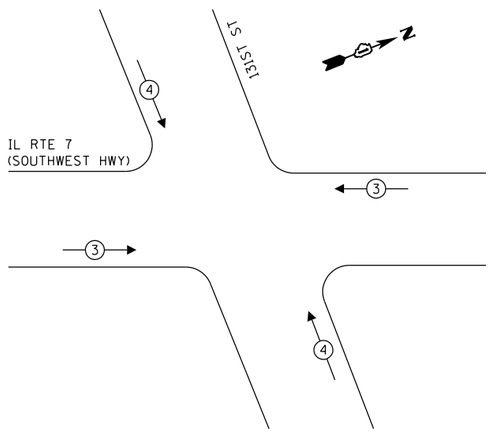

TRAFFIC SIGNAL ELECTRICAL SERVICE REQUIREMENTS

TYPE	NO. OF LAMPS	LED WATTAGE	% OPERATION	TOTAL WATTAGE
SIGNAL (RED)	12	11	50	66.0
(YELLOW)	12	20	5	12.0
(GREEN)	12	12	45	64.8
PERMISSIVE ARROW	16	10	10	16.0
PED. SIGNAL	-	20	100	-
CONTROLLER	1	100	100	100.0
UPS	1	25	100	25.0
VIDEO SYSTEM	1	150	100	150.0
BLANK-OUT SIGN	-	25	5	-
FLASHER	-	-	50	-
STREET NAME SIGN	-	120	50	-
LUMINAIRE	-	240	50	-
			TOTAL =	433.8

ENERGY COSTS TO:

VILLAGE OF ORLAND PARK
14700 RAVINIA AVENUE
ORLAND PARK, IL 60462

ENERGY SUPPLY: CONTACT: WARREN TAYLOR
PHONE: (708) 235-2328
COMPANY: COMMONWEALTH EDISON
ACCOUNT NUMBER:

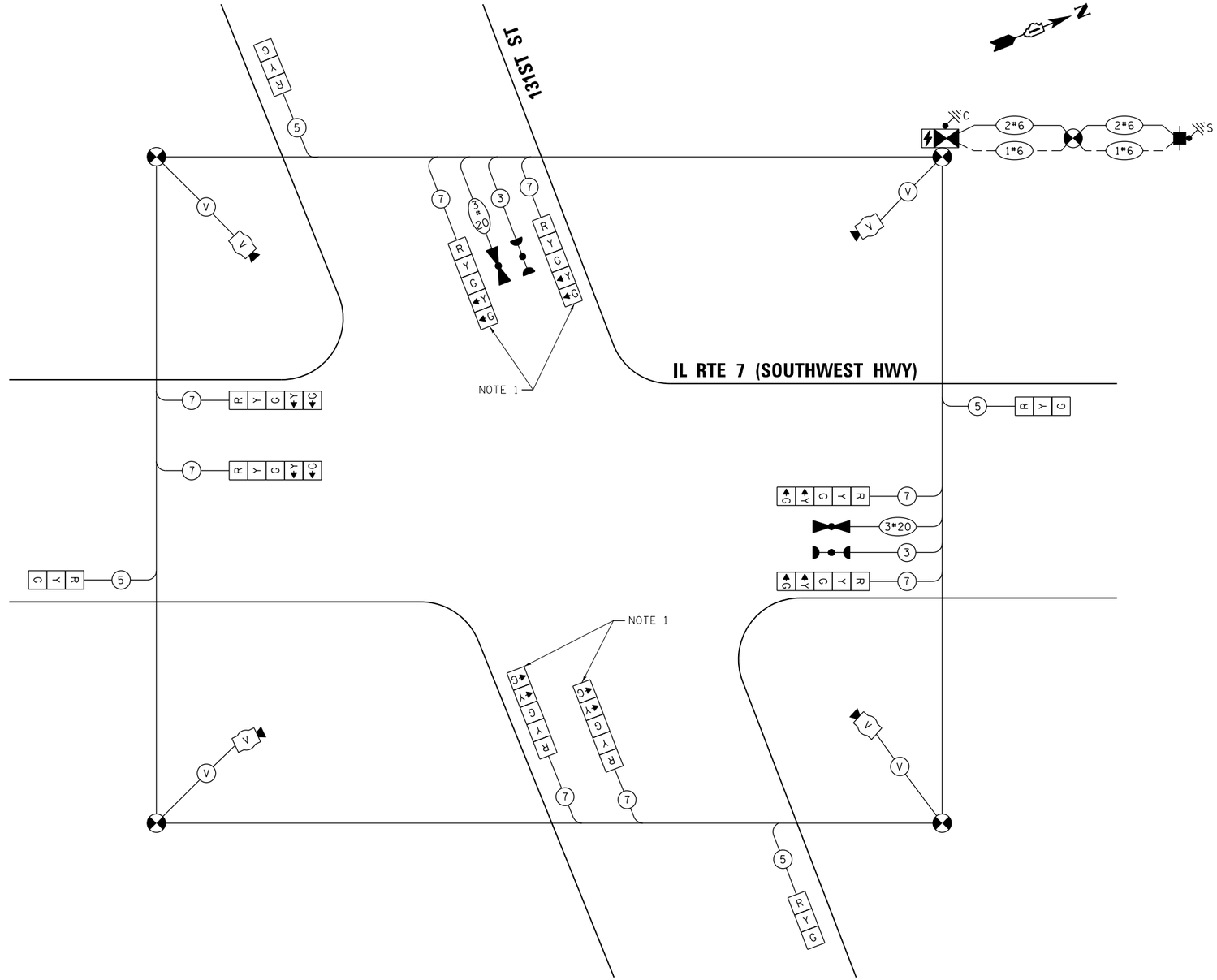

CABLE PLAN

(NOT TO SCALE)

NOTES:

1. THE GREEN AND YELLOW LEFT TURN ARROW INDICATION SECTIONS IN THE 5-SECTION SIGNAL HEADS FOR THE EASTBOUND AND WESTBOUND DIRECTIONS OF TRAFFIC SHALL BE DISCONNECTED AND BAGGED DURING CONSTRUCTION STAGE 1A AND STAGE 1B.

TS 1905
EAGLE

GANDHI AND ASSOCIATES, INC.
ENGINEERS AND PLANNERS
6035 N. NORTHWEST HIGHWAY
SUITE 306
CHICAGO, ILLINOIS 60631 TEL:(773)774-5980

USER NAME = $USER$	DESIGNED - EA	REVISED -	
	DRAWN - EA, AV	REVISED -	
PLOT SCALE = 40.0000 ' / in.	CHECKED - NT, AV	REVISED -	
PLOT DATE = $DATE$	DATE - 10/27/2022	REVISED -	

STATE OF ILLINOIS
DEPARTMENT OF TRANSPORTATION

TEMPORARY CABLE PLAN, TEMPORARY PHASE DESIGNATION DIAGRAM, AND TEMPORARY EMERGENCY VEHICLE PREEMPTION SEQUENCE
IL RTE 7 (SOUTHWEST HWY) AT 131ST ST

SCALE: N.T.S. | SHEET NO. OF SHEETS | STA. TO STA.

F.A.U. RTE.	SECTION	COUNTY	TOTAL SHEETS	SHEET NO.
3578	2019-001-R	COOK	255	127
		CONTRACT NO. 62H82		

FED. ROAD DIST. NO. - | ILLINOIS | FED. AID PROJECT

FILE NAME = K:\PROJECTS\Projects 2019\PTB 191_Item 84_IL Rte 7\CADD_Sheets\12_SOUTHWEST HWY @ 131ST STREET_TEMP_CD.dgn

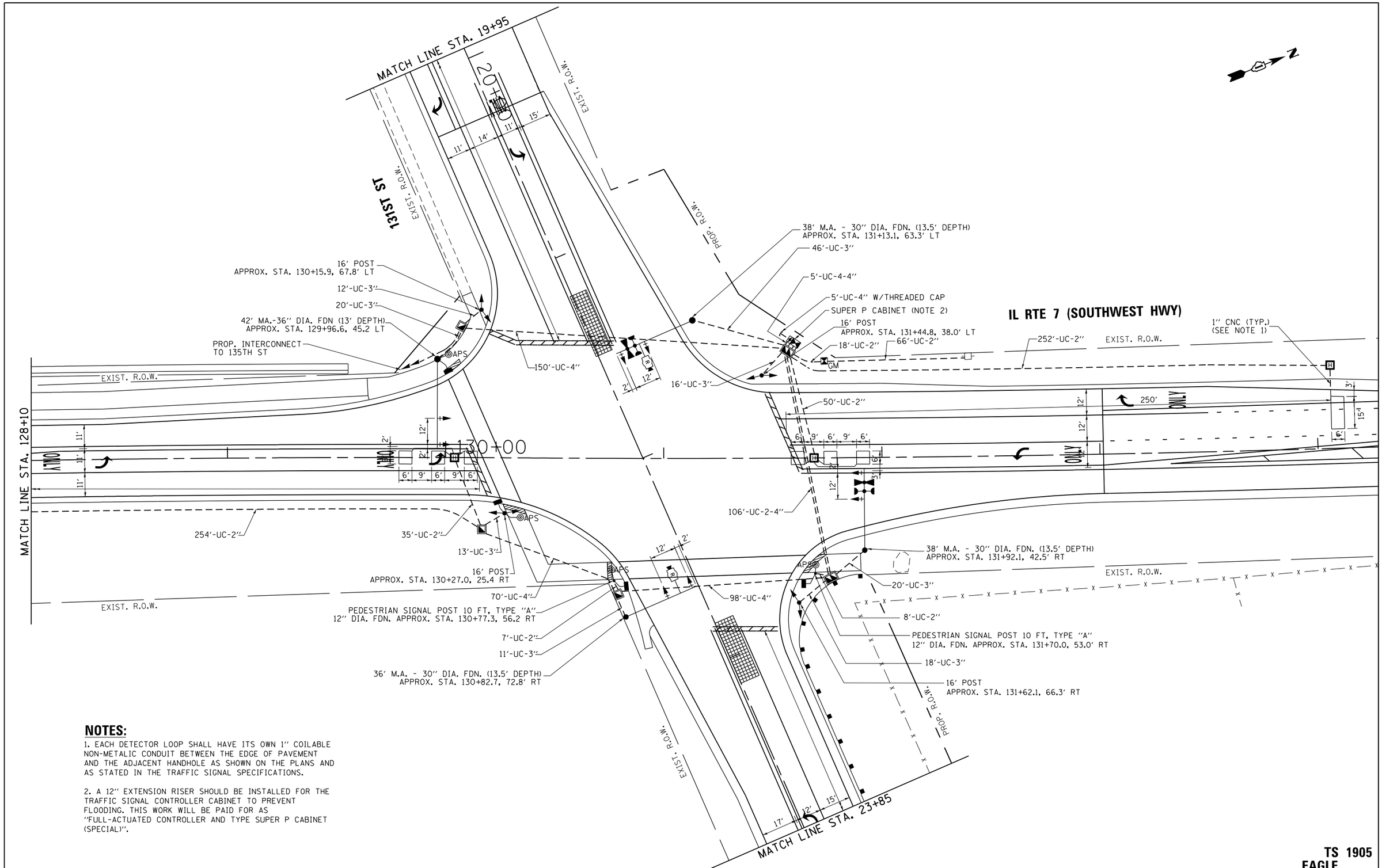

NOTES:

1. EACH DETECTOR LOOP SHALL HAVE ITS OWN 1'' COILABLE NON-METALIC CONDUIT BETWEEN THE EDGE OF PAVEMENT AND THE ADJACENT HANDHOLE AS SHOWN ON THE PLANS AND AS STATED IN THE TRAFFIC SIGNAL SPECIFICATIONS.

2. A 12'' EXTENSION RISER SHOULD BE INSTALLED FOR THE TRAFFIC SIGNAL CONTROLLER CABINET TO PREVENT FLOODING. THIS WORK WILL BE PAID FOR AS ''FULL-ACTUATED CONTROLLER AND TYPE SUPER P CABINET (SPECIAL)''.

TS 1905
EAGLE

GANDHI AND ASSOCIATES, INC. ENGINEERS AND PLANNERS 6035 N. NORTHWEST HIGHWAY SUITE 306 CHICAGO, ILLINOIS 60631 TEL:773774-5900	USER NAME = $USER$	DESIGNED - EA	REVISED -	STATE OF ILLINOIS DEPARTMENT OF TRANSPORTATION	TRAFFIC SIGNAL MODERNIZATION PLAN IL RTE 7 (SOUTHWEST HWY) AT 131ST ST (SHEET 1 OF 2)	F.A.U. RTE.	SECTION	COUNTY	TOTAL SHEETS	SHEET NO.
		DRAWN - EA, AV	REVISED -			3578	2019-001-R	COOK	255	128
	PLOT SCALE = 40.0000 ' / in.	CHECKED - NT, AV	REVISED -					CONTRACT NO. 62H82		
	PLOT DATE = $DATE$	DATE - 10/27/2022	REVISED -		SCALE: 1''=20' SHEET NO. OF SHEETS STA. TO STA.	FED. ROAD DIST. NO. _	ILLINOIS	FED. AID PROJECT		

FILE NAME = K:\PROJECTS\Projects 2019\PTB 191.Item 04.IL Rte 7\CADD.Sheets\13.SOUTHWEST HWY @ 131ST STREET.INT.dgn

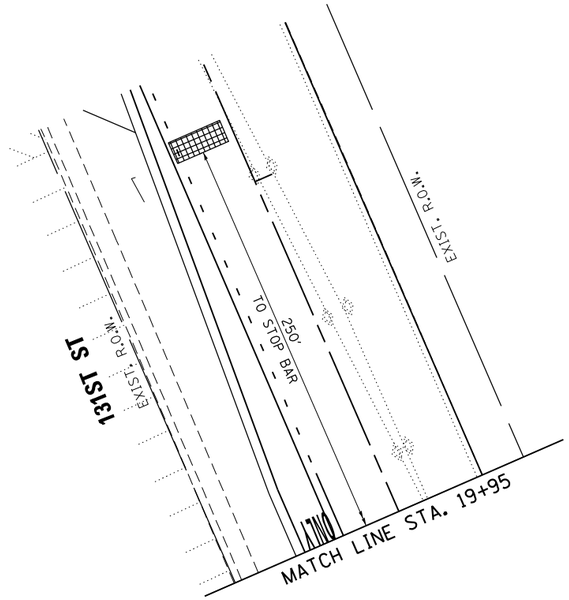

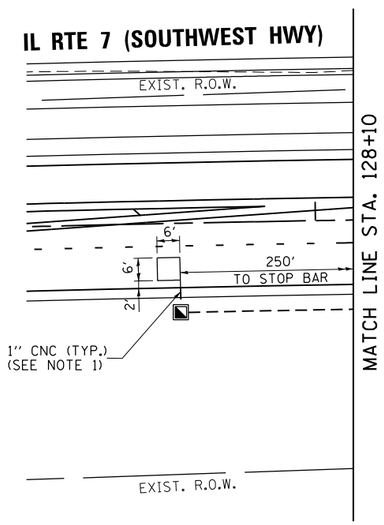

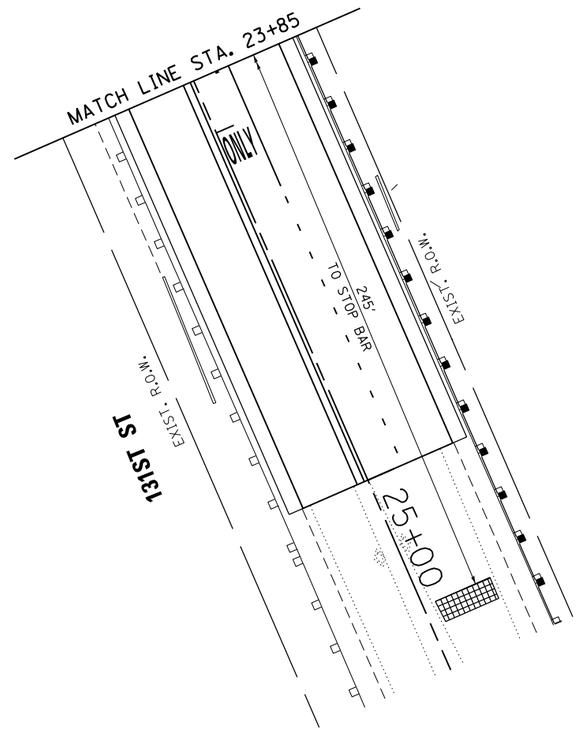

NOTES:

1. EACH DETECTOR LOOP SHALL HAVE ITS OWN 1" COILABLE NON-METALIC CONDUIT BETWEEN THE EDGE OF PAVEMENT AND THE ADJACENT HANDHOLE AS SHOWN ON THE PLANS AND AS STATED IN THE TRAFFIC SIGNAL SPECIFICATIONS.

TS 1905
EAGLE

GANDHI AND ASSOCIATES, INC. ENGINEERS AND PLANNERS 5035 N. NORTHWEST HIGHWAY SUITE 306 CHICAGO, ILLINOIS 60630 TEL:773)774-5980	USER NAME = $USER$	DESIGNED - EA	REVISED -	STATE OF ILLINOIS DEPARTMENT OF TRANSPORTATION	TRAFFIC SIGNAL MODERNIZATION PLAN IL RTE 7 (SOUTHWEST HWY) AT 131ST ST (SHEET 2 OF 2)	F.A.U. RTE.	SECTION	COUNTY	TOTAL SHEETS	SHEET NO.
		DRAWN - EA, AV	REVISED -			3578	2019-001-R	COOK	255	129
	PLOT SCALE = 40.0000 ' / in.	CHECKED - NT, AV	REVISED -					CONTRACT NO. 62H82		
	PLOT DATE = $DATE$	DATE - 10/27/2022	REVISED -		SCALE: 1"=20' / SHEET NO. OF SHEETS / STA. TO STA.	FED. ROAD DIST. NO. _	ILLINOIS	FED. AID PROJECT		

FILE NAME = K:\PROJECTS\Projects 2019\PTB 191_Item 84_IL Rte 7\CADD_Sheets\14_SOUTHWEST HWY @ 131ST STREET_INT_2.dgn

PROPOSED CONTROLLER SEQUENCE

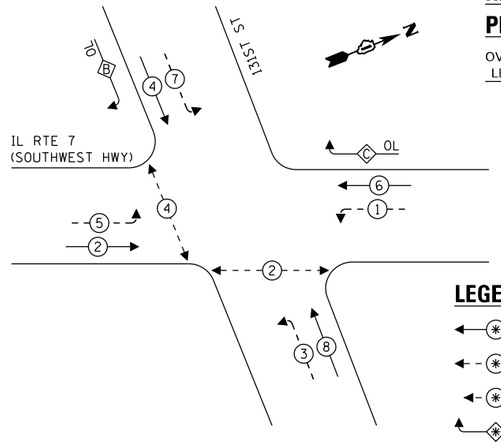

RIGHT TURN OVERLAP PHASE DESIGNATION:

OVERLAP LETTER		PERMISSIVE PHASE		PROTECTED PHASE
B	=	4	+	5
C	=	6	+	7

LEGEND:

- PROTECTED PHASE
- PROTECTED/PERMITTED PHASE
- PEDESTRIAN PHASE
- OL OVERLAP

PROPOSED EMERGENCY VEHICLE PREEMPTION SEQUENCE

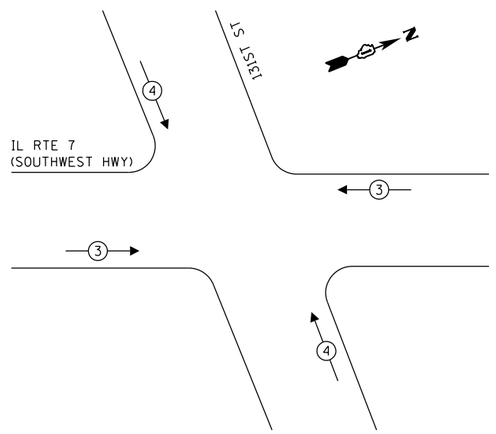

TRAFFIC SIGNAL ELECTRICAL SERVICE REQUIREMENTS

TYPE	NO. OF LAMPS	LED WATTAGE	% OPERATION	TOTAL WATTAGE
SIGNAL (RED)	16	11	50	88.0
(YELLOW)	16	20	5	16.0
(GREEN)	16	12	45	86.4
PERMISSIVE ARROW	24	10	10	24.0
PED. SIGNAL	4	20	100	80.0
CONTROLLER	1	100	100	100.0
UPS	1	25	100	25.0
VIDEO SYSTEM	-	150	100	-
BLANK-OUT SIGN	-	25	5	-
FLASHER	-	-	50	-
STREET NAME SIGN	-	120	50	-
LUMINAIRE	-	240	50	-
			TOTAL =	419.4

ENERGY COSTS TO:

VILLAGE OF ORLAND PARK
14700 RAVINIA AVENUE
ORLAND PARK, IL 60462

ENERGY SUPPLY: CONTACT: ILYAS MOHIUDDIN
PHONE: (708) 235-2692
COMPANY: COMMONWEALTH EDISON
ACCOUNT NUMBER: 46020-35016

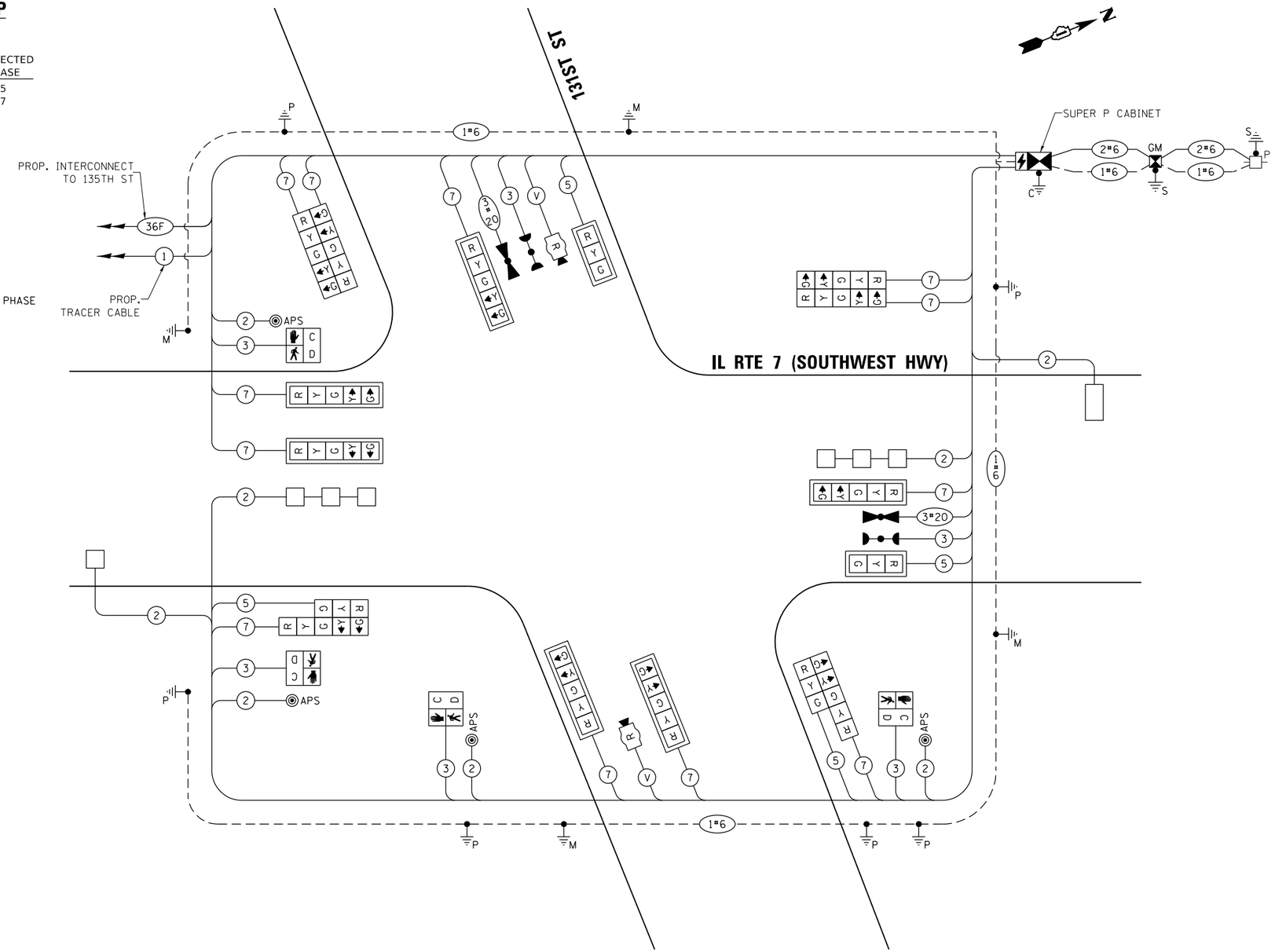

CABLE PLAN
(NOT TO SCALE)

TS 1905
EAGLE____

GANDHI AND ASSOCIATES, INC.
ENGINEERS AND PLANNERS
6035 N. NORTHWEST HIGHWAY
SUITE 306
CHICAGO, ILLINOIS 60631 TEL:(773)774-5910

USER NAME = $USER$	DESIGNED - EA	REVISED -
	DRAWN - EA, AV	REVISED -
PLOT SCALE = 40.0000 ' / in.	CHECKED - NT, AV	REVISED -
PLOT DATE = $DATE$	DATE - 10/27/2022	REVISED -

STATE OF ILLINOIS
DEPARTMENT OF TRANSPORTATION

CABLE PLAN, PHASE DESIGNATION DIAGRAM, AND EMERGENCY VEHICLE PREEMPTION SEQUENCE
IL RTE 7 (SOUTHWEST HWY) AT 131ST ST

SCALE: N.T.S. | SHEET NO. OF SHEETS | STA. TO STA.

F.A.U. RTE.	SECTION	COUNTY	TOTAL SHEETS	SHEET NO.
3578	2019-001-R	COOK	255	130
		CONTRACT NO. 62H82		

FED. ROAD DIST. NO. - | ILLINOIS | FED. AID PROJECT

FILE NAME = K:\PROJECTS\P-rojects 2019\PTB 191.Item 04.IL Rte 7\CADD.Sheets\15.SOUTHWEST HWY @ 131ST STREET_CD.dgn

SIGN PANEL – TYPE 1 OR TYPE 2

ALL DIMENSIONS ARE IN INCHES UNLESS NOTED OTHERWISE

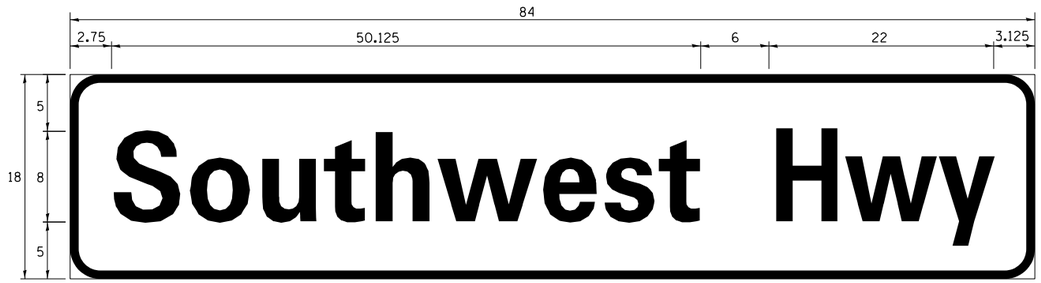

DESIGN SERIES	AREA (SQ FT)	SIGN PANEL TYPE	SHEETING TYPE	QTY. REQUIRED
D	10.5	2	ZZ	2

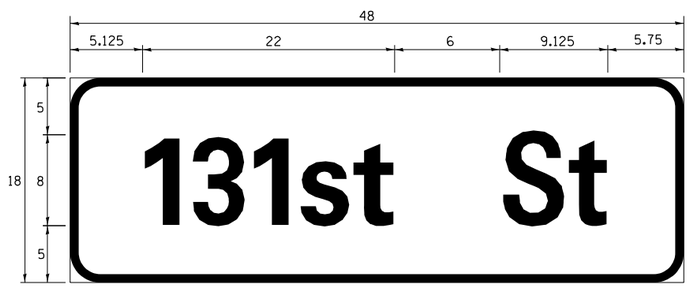

DESIGN SERIES	AREA (SQ FT)	SIGN PANEL TYPE	SHEETING TYPE	QTY. REQUIRED
D	6.0	1	ZZ	2

NOTE: FOR ADDITIONAL DESIGN AND INSTALLATION INFORMATION PLEASE SEE DISTRICT ONE MAST ARM MOUNTED STREET NAME SIGNS DETAIL.

SCHEDULE OF QUANTITIES

	ITEM DESCRIPTION	UNITS	TOTAL QTY.
	SIGN PANEL - TYPE 1	SQ FT	12
	SIGN PANEL - TYPE 2	SQ FT	21
	UNDERGROUND CONDUIT, GALVANIZED STEEL, 2" DIA.	FOOT	690
	UNDERGROUND CONDUIT, GALVANIZED STEEL, 3" DIA.	FOOT	156
	UNDERGROUND CONDUIT, GALVANIZED STEEL, 4" DIA.	FOOT	555
	HANDHOLE	EACH	4
	HEAVY-DUTY HANDHOLE	EACH	3
	DOUBLE HANDHOLE	EACH	2
	TRANSCEIVER - FIBER OPTIC	EACH	1
	ELECTRIC CABLE IN CONDUIT, SIGNAL NO. 14 2C	FOOT	972
	ELECTRIC CABLE IN CONDUIT, SIGNAL NO. 14 3C	FOOT	1343
	ELECTRIC CABLE IN CONDUIT, SIGNAL NO. 14 5C	FOOT	849
	ELECTRIC CABLE IN CONDUIT, SIGNAL NO. 14 7C	FOOT	2523
	ELECTRIC CABLE IN CONDUIT, LEAD-IN, NO. 14 1 PAIR	FOOT	1311
	ELECTRIC CABLE IN CONDUIT, SERVICE, NO. 6 2C	FOOT	137
	ELECTRIC CABLE IN CONDUIT, EQUIPMENT GROUNDING CONDUCTOR, NO. 6 1C	FOOT	990
	TRAFFIC SIGNAL POST, GALVANIZED STEEL 16 FT.	EACH	4
	STEEL MAST ARM ASSEMBLY AND POLE, 36 FT.	EACH	1
	STEEL MAST ARM ASSEMBLY AND POLE, 38 FT.	EACH	2
	STEEL MAST ARM ASSEMBLY AND POLE, 42 FT.	EACH	1
	CONCRETE FOUNDATION, TYPE A	FOOT	20
	CONCRETE FOUNDATION, TYPE C	FOOT	4
	CONCRETE FOUNDATION, TYPE E 30-INCH DIAMETER	FOOT	40.5
	CONCRETE FOUNDATION, TYPE E 36-INCH DIAMETER	FOOT	13
	SIGNAL HEAD, LED, 1-FACE, 3-SECTION, MAST ARM MOUNTED	EACH	2
	SIGNAL HEAD, LED, 1-FACE, 3-SECTION, BRACKET MOUNTED	EACH	2
	SIGNAL HEAD, LED, 1-FACE, 5-SECTION, BRACKET MOUNTED	EACH	6
	SIGNAL HEAD, LED, 1-FACE, 5-SECTION, MAST ARM MOUNTED	EACH	6
	PEDESTRIAN SIGNAL HEAD, LED, 1-FACE, BRACKET MOUNTED WITH COUNTDOWN TIMER	EACH	4
	TRAFFIC SIGNAL BACKPLATE, LOUVERED, FORMED PLASTIC	EACH	8
	INDUCTIVE LOOP DETECTOR	EACH	4
	DETECTOR LOOP, TYPE I	FOOT	281
*	LIGHT DETECTOR	EACH	2
*	LIGHT DETECTOR AMPLIFIER	EACH	1
	TEMPORARY TRAFFIC SIGNAL INSTALLATION	EACH	1
	REMOVE EXISTING TRAFFIC SIGNAL EQUIPMENT	EACH	1
	REMOVE EXISTING HANDHOLE	EACH	8
	REMOVE EXISTING DOUBLE HANDHOLE	EACH	1
	REMOVE EXISTING CONCRETE FOUNDATION	EACH	9
*	EMERGENCY VEHICLE PRIORITY SYSTEM LINE SENSOR CABLE, NO. 20 3/C	FOOT	343
	FULL-ACTUATED CONTROLLER AND TYPE SUPER P CABINET (SPECIAL)	EACH	1
	SERVICE INSTALLATION, GROUND MOUNTED, METERED	EACH	1
	PEDESTRIAN SIGNAL POST, 10 FT	EACH	2
	RADAR VEHICLE DETECTION SYSTEM, SINGLE APPROACH, STOP BAR AND FAR BACK	EACH	2
	UNINTERRUPTABLE POWER SUPPLY, SPECIAL	EACH	1
	ACCESSIBLE PEDESTRIAN SIGNALS	EACH	4
	CONCRETE FOUNDATION, TYPE A 12-INCH DIAMETER	FOOT	8
	TEMPORARY TRAFFIC SIGNAL TIMING	EACH	1

* 100% COST TO VILLAGE OF ORLAND PARK

TS 1905
EAGLE____

FILE NAME = K:\PROJECTS\Projects 2019\PTB 191.Item 04.IL Rte 7\CADD.Sheets\16.SOUTHWEST HWY @ 131ST STREET.CD2.dgn

GANDHI AND ASSOCIATES, INC.
ENGINEERS AND PLANNERS
6035 N. NORTHWEST HIGHWAY
SUITE 306
CHICAGO, ILLINOIS 60631 TEL.(773)774-5910

USER NAME = $USER$	DESIGNED - EA	REVISED -	
	DRAWN - EA, AV	REVISED -	
PLOT SCALE = 40.0000 ' / in.	CHECKED - NT, AV	REVISED -	
PLOT DATE = $DATE$	DATE - 10/27/2022	REVISED -	

STATE OF ILLINOIS
DEPARTMENT OF TRANSPORTATION

MAST ARM MOUNTED STREET NAME SIGNS
AND SCHEDULE OF QUANTITIES
IL RTE 7 (SOUTHWEST HWY) AT 131ST ST

SCALE: N.T.S. | SHEET NO. OF SHEETS | STA. TO STA.

F.A.U. RTE.	SECTION	COUNTY	TOTAL SHEETS	SHEET NO.
3578	2019-001-R	COOK	255	131

CONTRACT NO. 62H82

FED. ROAD DIST. NO. _ | ILLINOIS | FED. AID PROJECT

NOTES:

1. SECTION 6G.18 WORK IN THE VICINITY OF GRADE CROSSING (MUTCD) STANDARD: WHEN GRADE CROSSINGS EXIST EITHER WITHIN OR IN THE VICINITY OF A TTC ZONE, LANE RESTRICTIONS, FLAGGING, OR OTHER OPERATIONS SHALL NOT CREATE CONDITIONS WHERE VEHICLES CAN BE QUEUED ACROSS THE TRACKS. IF THE QUEUING OF VEHICLES ACROSS THE TRACKS CANNOT BE AVOIDED, A UNIFORMED LAW ENFORCEMENT OFFICER OR FLAGGER SHALL BE PROVIDED AT THE CROSSING TO PREVENT VEHICLES FROM STOPPING ON THE TRACKS, EVEN IF AUTOMATIC WARNING DEVICES ARE IN PLACE.

NOTES:

2. THE CONDUIT SHALL BE ATTACHED TO THE WOOD POLE TO A HEIGHT OF 10 FEET AND SHALL BE PAID FOR AS CONTRACT UNIT PRICE PER FOOT FOR UNDERGROUND CONDUIT OF THE SIZE SPECIFIED. ALL OTHER CONDUITS AND UNIT DUCTS COMING INTO THE HANDHOLES, AS SHOWN IN THE PROPOSED INTERSECTION PLANS, SHALL BE CONSTRUCTED WHEN THE HANDHOLES ARE CONSTRUCTED. THE CONDUITS AND UNIT DUCTS SHALL BE STUBBED AND CAPPED UNTIL NEEDED. THE HANDHOLES, CONDUITS, AND APPLICABLE ITEMS ARE INCLUDED FOR PAYMENT IN THE SCHEDULE OF QUANTITIES FOR IL RTE 7 (SOUTHWEST HWY) AT 135TH ST.

RAILROAD PREEMPTION REQUIREMENTS:

PRIOR TO INSTALLATION, THE CONTRACTOR SHALL SHOP TEST THE TEMPORARY TRAFFIC CONTROLLER AND CABINET AT THE EQUIPMENT VENDOR'S FACILITY WITH STAFF OF THE ICC PRESENT.

THE CONTRACTOR WILL BE RESPONSIBLE FOR INSTALLING THE INTERCONNECT CABLE TO THE CROSSING WARNING SIGNAL CONTROL HOUSING. THE RAILROAD SIGNAL DEPARTMENT WILL BE RESPONSIBLE FOR TERMINATING THE CABLE AT THE RAILROAD EQUIPMENT.

THE CONTRACTOR WILL BE RESPONSIBLE FOR COORDINATING THE REQUIRED TESTING AND INSTALLATION OF THE INTERCONNECT CABLE TO THE CROSSING WARNING SIGNAL CONTROL HOUSING. REPRESENTATIVES FROM IDOT, THE CONTRACTOR, THE TRAFFIC CONTROLLER MANUFACTURER, ICC, AND RAILROAD SIGNAL DEPARTMENT MUST BE IN ATTENDANCE FOR THE TURN-ON INSPECTION.

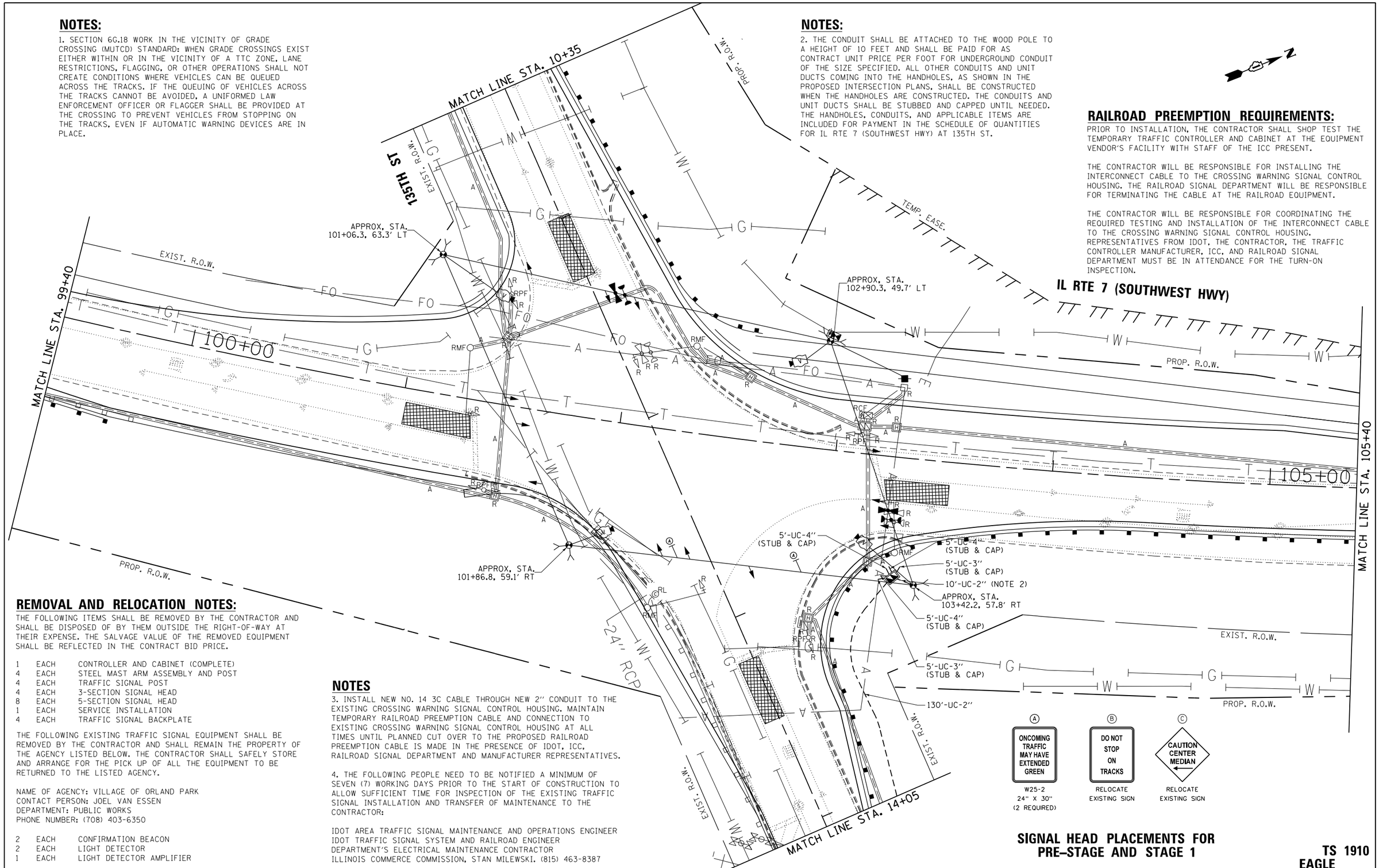

REMOVAL AND RELOCATION NOTES:

THE FOLLOWING ITEMS SHALL BE REMOVED BY THE CONTRACTOR AND SHALL BE DISPOSED OF BY THEM OUTSIDE THE RIGHT-OF-WAY AT THEIR EXPENSE. THE SALVAGE VALUE OF THE REMOVED EQUIPMENT SHALL BE REFLECTED IN THE CONTRACT BID PRICE.

1	EACH	CONTROLLER AND CABINET (COMPLETE)
4	EACH	STEEL MAST ARM ASSEMBLY AND POST
4	EACH	TRAFFIC SIGNAL POST
4	EACH	3-SECTION SIGNAL HEAD
8	EACH	5-SECTION SIGNAL HEAD
1	EACH	SERVICE INSTALLATION
4	EACH	TRAFFIC SIGNAL BACKPLATE

THE FOLLOWING EXISTING TRAFFIC SIGNAL EQUIPMENT SHALL BE REMOVED BY THE CONTRACTOR AND SHALL REMAIN THE PROPERTY OF THE AGENCY LISTED BELOW. THE CONTRACTOR SHALL SAFELY STORE AND ARRANGE FOR THE PICK UP OF ALL THE EQUIPMENT TO BE RETURNED TO THE LISTED AGENCY.

NAME OF AGENCY: VILLAGE OF ORLAND PARK
CONTACT PERSON: JOEL VAN ESSEN
DEPARTMENT: PUBLIC WORKS
PHONE NUMBER: (708) 403-6350

2	EACH	CONFIRMATION BEACON
2	EACH	LIGHT DETECTOR
1	EACH	LIGHT DETECTOR AMPLIFIER

NOTES

3. INSTALL NEW NO. 14 3C CABLE THROUGH NEW 2" CONDUIT TO THE EXISTING CROSSING WARNING SIGNAL CONTROL HOUSING. MAINTAIN TEMPORARY RAILROAD PREEMPTION CABLE AND CONNECTION TO EXISTING CROSSING WARNING SIGNAL CONTROL HOUSING AT ALL TIMES UNTIL PLANNED CUT OVER TO THE PROPOSED RAILROAD PREEMPTION CABLE IS MADE IN THE PRESENCE OF IDOT, ICC, RAILROAD SIGNAL DEPARTMENT AND MANUFACTURER REPRESENTATIVES.

4. THE FOLLOWING PEOPLE NEED TO BE NOTIFIED A MINIMUM OF SEVEN (7) WORKING DAYS PRIOR TO THE START OF CONSTRUCTION TO ALLOW SUFFICIENT TIME FOR INSPECTION OF THE EXISTING TRAFFIC SIGNAL INSTALLATION AND TRANSFER OF MAINTENANCE TO THE CONTRACTOR:

IDOT AREA TRAFFIC SIGNAL MAINTENANCE AND OPERATIONS ENGINEER
IDOT TRAFFIC SIGNAL SYSTEM AND RAILROAD ENGINEER
DEPARTMENT'S ELECTRICAL MAINTENANCE CONTRACTOR
ILLINOIS COMMERCE COMMISSION, STAN MILEWSKI. (815) 463-8387

Ⓐ ONCOMING TRAFFIC MAY HAVE EXTENDED GREEN — W25-2, 24" X 30" (2 REQUIRED)

Ⓑ DO NOT STOP ON TRACKS — RELOCATE EXISTING SIGN

Ⓒ CAUTION CENTER MEDIAN — RELOCATE EXISTING SIGN

SIGNAL HEAD PLACEMENTS FOR PRE-STAGE AND STAGE 1

TS 1910
EAGLE

FILE NAME = K:\PROJECTS\Projects 2019\PTB 191.Item 84.IL Rte 7\CADD.Sheets\17.SOUTHWEST HWY @ 135TH STREET_TEMP_INT.dgn

GANDHI AND ASSOCIATES, INC.
ENGINEERS AND PLANNERS
5035 N. NORTHWEST HIGHWAY
SUITE 306
CHICAGO, ILLINOIS 60631 TEL:(773)774-5910

USER NAME = $USER$	DESIGNED - EA	REVISED -	
	DRAWN - EA, AV	REVISED -	
PLOT SCALE = 40.0000 ' / in.	CHECKED - NT, AV	REVISED -	
PLOT DATE = $DATE$	DATE - 10/27/2022	REVISED -	

STATE OF ILLINOIS
DEPARTMENT OF TRANSPORTATION

TEMPORARY TRAFFIC SIGNAL INSTALLATION PLAN AND REMOVE EXISTING TRAFFIC SIGNAL EQUIPMENT PLAN
IL RTE 7 (SOUTHWEST HWY) AT 135TH ST (SHEET 1 OF 2)

SCALE: 1"=20' | SHEET NO. OF SHEETS | STA. TO STA.

F.A.U. RTE.	SECTION	COUNTY	TOTAL SHEETS	SHEET NO.
3578	2019-001-R	COOK	255	132
		CONTRACT NO. 62H82		

FED. ROAD DIST. NO. _ | ILLINOIS | FED. AID PROJECT

NOTES

1. INSTALL NEW NO. 14 3C CABLE THROUGH NEW 2" CONDUIT TO THE EXISTING CROSSING WARNING SIGNAL CONTROL HOUSING. MAINTAIN TEMPORARY RAILROAD PREEMPTION CABLE AND CONNECTION TO EXISTING CROSSING WARNING SIGNAL CONTROL HOUSING AT ALL TIMES UNTIL PLANNED CUT OVER TO THE PROPOSED RAILROAD PREEMPTION CABLE IS MADE IN THE PRESENCE OF IDOT, ICC, RAILROAD SIGNAL DEPARTMENT AND MANUFACTURER REPRESENTATIVES.

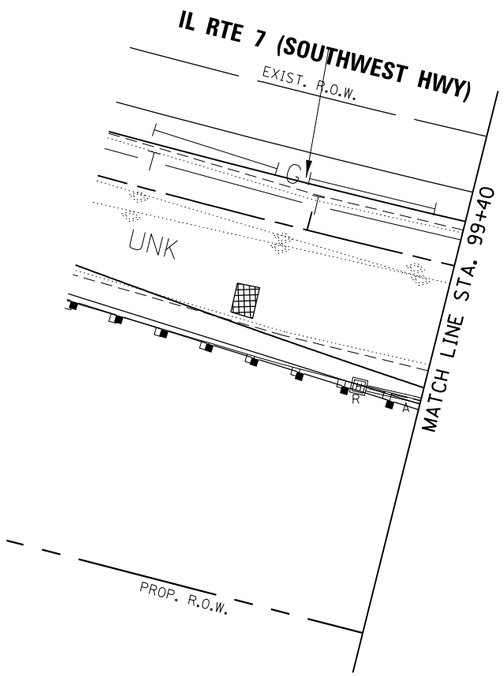

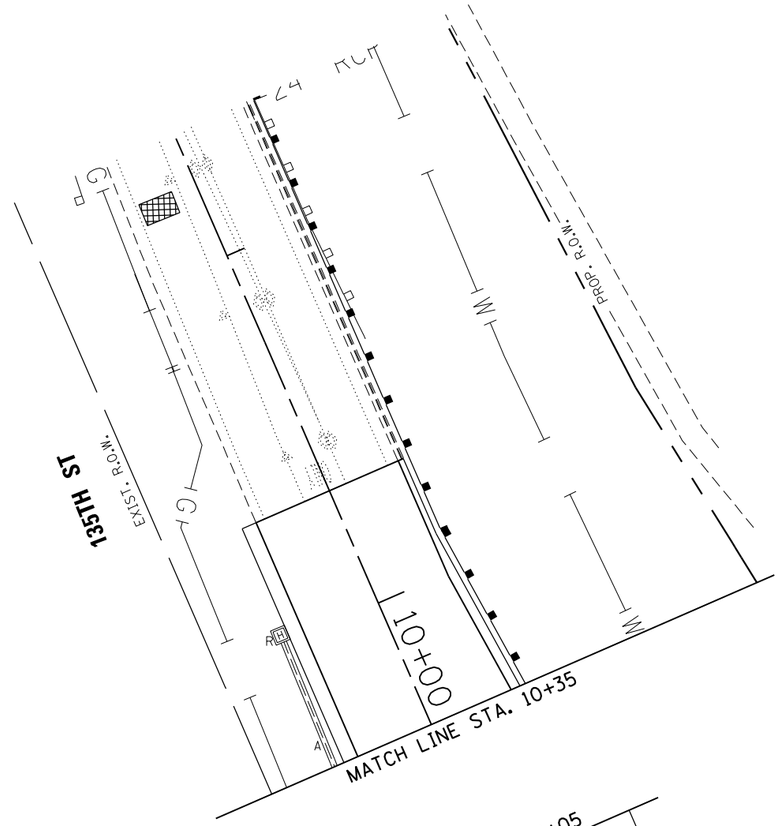

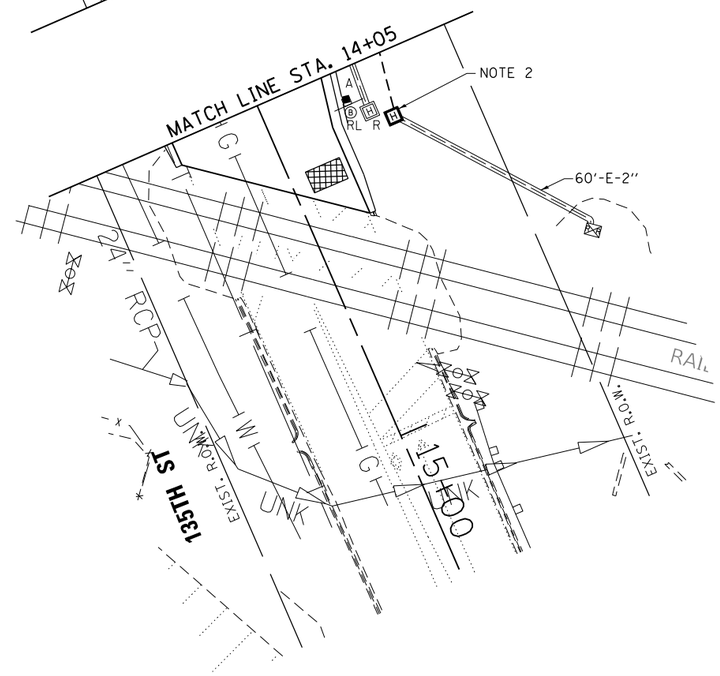

RAILROAD PREEMPTION REQUIREMENTS:

PRIOR TO INSTALLATION, THE CONTRACTOR SHALL SHOP TEST THE TEMPORARY TRAFFIC CONTROLLER AND CABINET AT THE EQUIPMENT VENDOR'S FACILITY WITH STAFF OF THE ICC PRESENT.

THE CONTRACTOR WILL BE RESPONSIBLE FOR INSTALLING THE INTERCONNECT CABLE TO THE CROSSING WARNING SIGNAL CONTROL HOUSING. THE RAILROAD SIGNAL DEPARTMENT WILL BE RESPONSIBLE FOR TERMINATING THE CABLE AT THE RAILROAD EQUIPMENT.

THE CONTRACTOR WILL BE RESPONSIBLE FOR COORDINATING THE REQUIRED TESTING AND INSTALLATION OF THE INTERCONNECT CABLE TO THE CROSSING WARNING SIGNAL CONTROL HOUSING. REPRESENTATIVES FROM IDOT, THE CONTRACTOR, THE TRAFFIC CONTROLLER MANUFACTURER, ICC, AND RAILROAD SIGNAL DEPARTMENT MUST BE IN ATTENDANCE FOR THE TURN-ON INSPECTION.

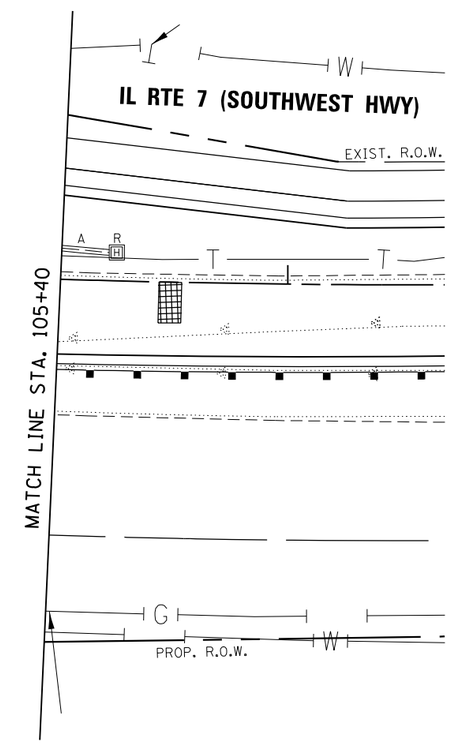

NOTES

2. THE PROPOSED HANDHOLE IN THE NORTHEAST QUADRANT OF IL RTE 7 (SOUTHWEST HWY) AND 135TH STREET SHALL BE CONSTRUCTED SO AS TO INTERCEPT THE EXISTING RAILROAD INTERCONNECT CONDUIT GOING EAST TO THE EXISTING RAILROAD CABINET.

3. THE CENTER DELINEATORS ARE REQUIRED PER ORLAND QUIET ZONE.

RELOCATE EXISTING SIGN

TS 1910
EAGLE

GANDHI AND ASSOCIATES, INC. ENGINEERS AND PLANNERS 6035 N. NORTHWEST HIGHWAY SUITE 306 CHICAGO, ILLINOIS 60631 TEL.(773)774-5910	USER NAME = $USER$	DESIGNED - EA	REVISED -	STATE OF ILLINOIS DEPARTMENT OF TRANSPORTATION	TEMPORARY TRAFFIC SIGNAL INSTALLATION PLAN AND REMOVE EXISTING TRAFFIC SIGNAL EQUIPMENT PLAN IL RTE 7 (SOUTHWEST HWY) AT 135TH ST (SHEET 2 OF 2)	F.A.U. RTE.	SECTION	COUNTY	TOTAL SHEETS	SHEET NO.
		DRAWN - EA, AV	REVISED -			3578	2019-001-R	COOK	255	133
	PLOT SCALE = 40.0000 ' / in.	CHECKED - NT, AV	REVISED -					CONTRACT NO. 62H82		
	PLOT DATE = $DATE$	DATE - 10/27/2022	REVISED -		SCALE: 1"=20' SHEET NO. OF SHEETS STA. TO STA.	FED. ROAD DIST. NO. _	ILLINOIS	FED. AID PROJECT		

FILE NAME = K:\PROJECTS\Projects 2019\PTB 191_Item 04_IL Rte 7\CADD_Sheets\18_SOUTHWEST HWY @ 135TH STREET_TEMP_INT_2.dgn

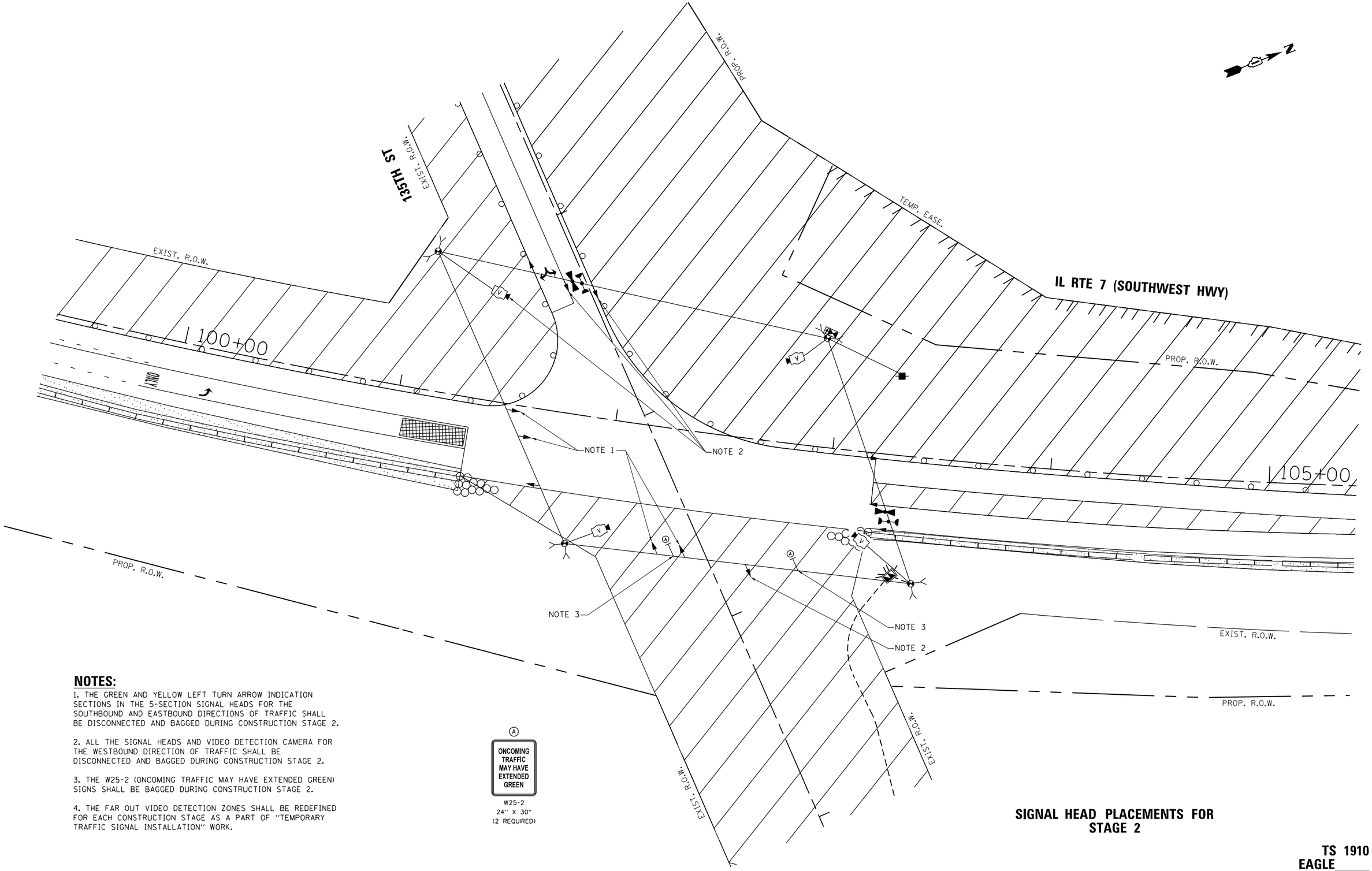

NOTES:

1. THE GREEN AND YELLOW LEFT TURN ARROW INDICATION SECTIONS IN THE 5-SECTION SIGNAL HEADS FOR THE SOUTHBOUND AND EASTBOUND DIRECTIONS OF TRAFFIC SHALL BE DISCONNECTED AND BAGGED DURING CONSTRUCTION STAGE 2.

2. ALL THE SIGNAL HEADS AND VIDEO DETECTION CAMERA FOR THE WESTBOUND DIRECTION OF TRAFFIC SHALL BE DISCONNECTED AND BAGGED DURING CONSTRUCTION STAGE 2.

3. THE W25-2 (ONCOMING TRAFFIC MAY HAVE EXTENDED GREEN) SIGNS SHALL BE BAGGED DURING CONSTRUCTION STAGE 2.

4. THE FAR OUT VIDEO DETECTION ZONES SHALL BE REDEFINED FOR EACH CONSTRUCTION STAGE AS A PART OF "TEMPORARY TRAFFIC SIGNAL INSTALLATION" WORK.

SIGNAL HEAD PLACEMENTS FOR STAGE 2

TS 1910
EAGLE

FILE NAME = K:\PROJECTS\Projects 2019\PTB 191_Item 04_IL Rte 7\CADD_Sheets\19_SOUTHWEST HWY @ 135TH STREET_TEMP_INT_3.dgn

GANDHI AND ASSOCIATES, INC. ENGINEERS AND PLANNERS 6035 N. NORTHWEST HIGHWAY SUITE 306 CHICAGO, ILLINOIS 60631 TEL./773/774-5910	USER NAME = $USER$	DESIGNED - EA	REVISED -	STATE OF ILLINOIS DEPARTMENT OF TRANSPORTATION	TEMPORARY TRAFFIC SIGNAL INSTALLATION PLAN IL RTE 7 (SOUTHWEST HWY) AT 135TH ST
		DRAWN - EA, AV	REVISED -		
	PLOT SCALE = 40.0000 ' / in.	CHECKED - NT, AV	REVISED -		
	PLOT DATE = $DATE$	DATE - 10/27/2022	REVISED -		SCALE: 1"=20' SHEET NO. OF SHEETS STA. TO STA.

F.A.U. RTE.	SECTION	COUNTY	TOTAL SHEETS	SHEET NO.
3578	2019-001-R	COOK	255	134
		CONTRACT NO. 62H82		
FED. ROAD DIST. NO. _	ILLINOIS	FED. AID PROJECT		

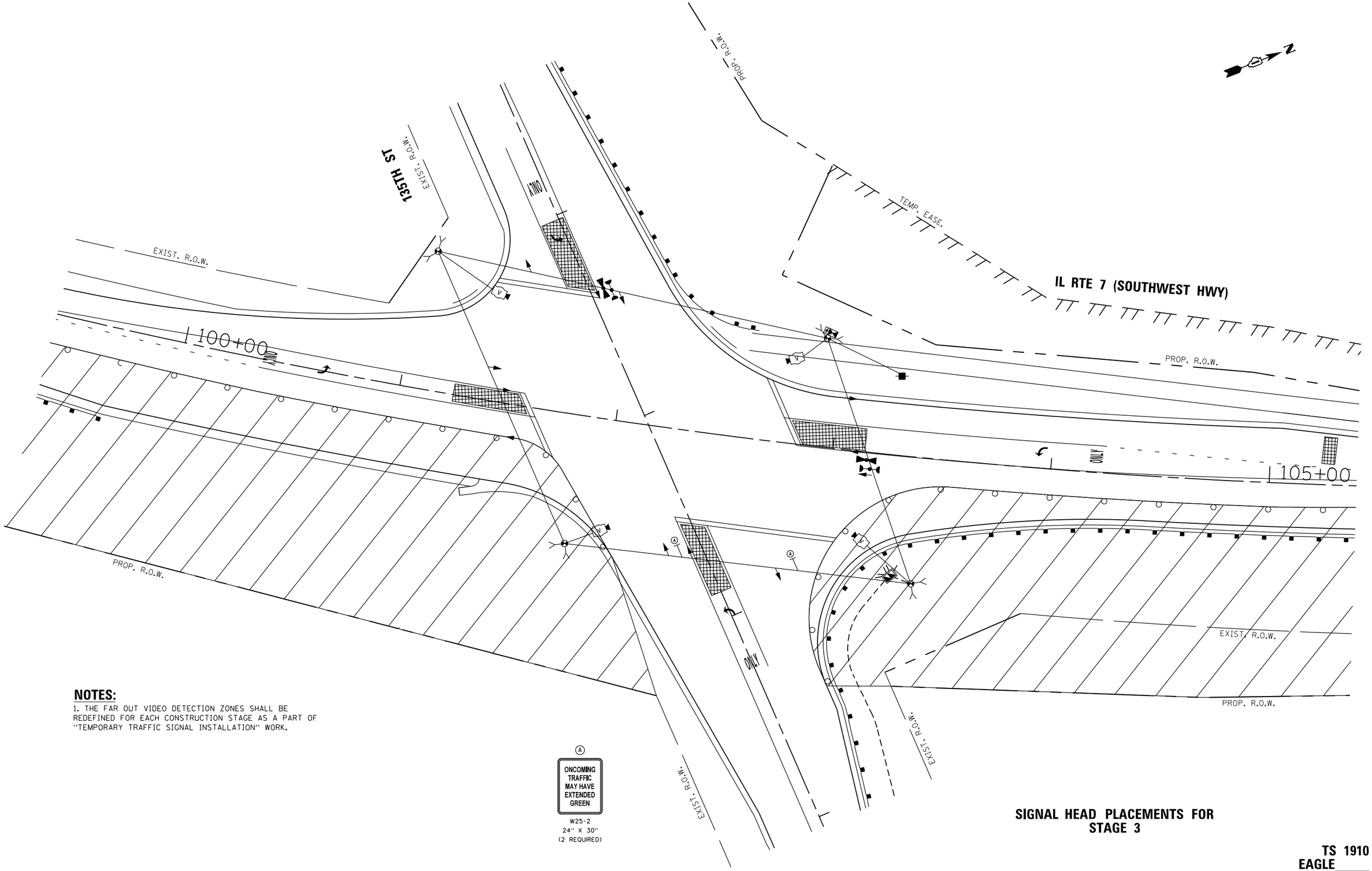

NOTES:

1. THE FAR OUT VIDEO DETECTION ZONES SHALL BE REDEFINED FOR EACH CONSTRUCTION STAGE AS A PART OF "TEMPORARY TRAFFIC SIGNAL INSTALLATION" WORK.

SIGNAL HEAD PLACEMENTS FOR STAGE 3

TS 1910
EAGLE

GANDHI AND ASSOCIATES, INC. ENGINEERS AND PLANNERS 5035 N. NORTHWEST HIGHWAY SUITE 326 CHICAGO, ILLINOIS 60631 TEL.773)774-5900	USER NAME = $USER$	DESIGNED - EA	REVISED -	STATE OF ILLINOIS DEPARTMENT OF TRANSPORTATION	TEMPORARY TRAFFIC SIGNAL INSTALLATION PLAN IL RTE 7 (SOUTHWEST HWY) AT 135TH ST	F.A.U. RTE.	SECTION	COUNTY	TOTAL SHEETS / SHEET NO.
		DRAWN - EA, AV	REVISED -			3578	2019-001-R	COOK	255 / 135
	PLOT SCALE = 40.0000 ' / in.	CHECKED - NT, AV	REVISED -					CONTRACT NO. 62H82	
	PLOT DATE = $DATE$	DATE - 10/27/2022	REVISED -		SCALE: 1"=20' SHEET NO. OF SHEETS STA. TO STA.	FED. ROAD DIST. NO. _	ILLINOIS	FED. AID PROJECT	

FILE NAME = K:\PROJECTS\Projects 2019\PTB 191_Item 04_IL Rte 7\CADD_Sheets\20_SOUTHWEST HWY @ 135TH STREET_TEMP_INT_4.dgn

NOTES:

1. THE GREEN AND YELLOW LEFT TURN ARROW INDICATION SECTIONS IN THE 5-SECTION SIGNAL HEADS FOR THE SOUTHBOUND AND EASTBOUND DIRECTIONS OF TRAFFIC SHALL BE DISCONNECTED AND BAGGED DURING CONSTRUCTION STAGE 2.

2. ALL THE SIGNAL HEADS AND VIDEO DETECTION CAMERA FOR THE WESTBOUND DIRECTION OF TRAFFIC SHALL BE DISCONNECTED AND BAGGED DURING CONSTRUCTION STAGE 2.

3. MAINTAIN TEMPORARY RAILROAD PREEMPTION CABLE AND CONNECTION TO EXISTING CROSSING WARNING SIGNAL CONTROL HOUSING AT ALL TIMES UNTIL PLANNED CUT OVER TO THE PROPOSED RAILROAD PREEMPTION CABLE IS MADE IN THE PRESENCE OF IDOT, ICC, RAILROAD SIGNAL DEPARTMENT AND MANUFACTURER REPRESENTATIVES.

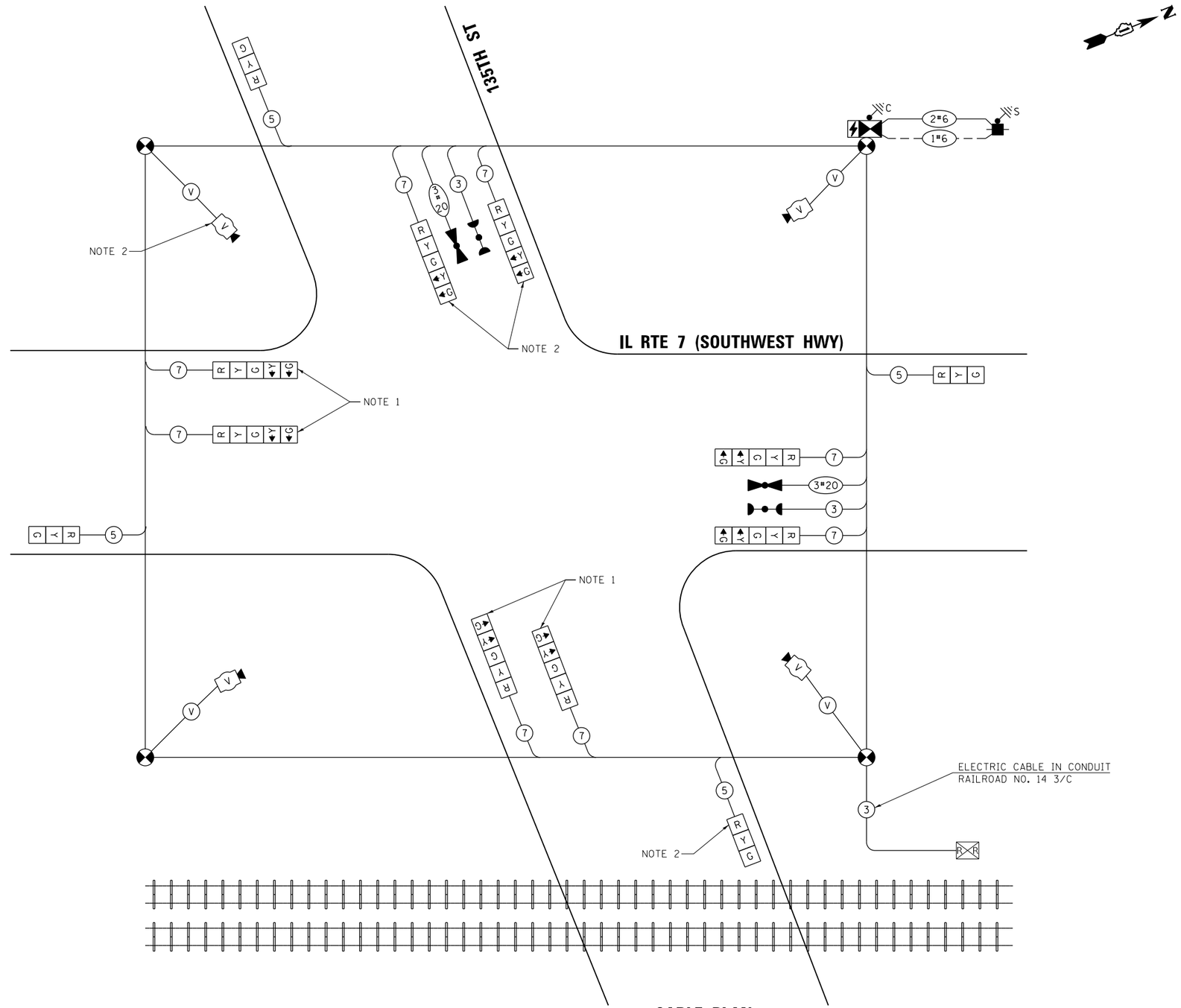

CABLE PLAN
(NOT TO SCALE)

TRAFFIC SIGNAL ELECTRICAL SERVICE REQUIREMENTS

TYPE	NO. OF LAMPS	LED WATTAGE	% OPERATION	TOTAL WATTAGE
SIGNAL (RED)	12	11	50	66.0
(YELLOW)	12	20	5	12.0
(GREEN)	12	12	45	64.8
PERMISSIVE ARROW	16	10	10	16.0
PED. SIGNAL	-	20	100	-
CONTROLLER	1	100	100	100.0
UPS	1	25	100	25.0
VIDEO SYSTEM	1	150	100	150.0
BLANK-OUT SIGN	-	25	5	-
FLASHER	-	-	50	-
STREET NAME SIGN	-	120	50	-
LUMINAIRE	-	240	50	-
			TOTAL =	433.8

ENERGY COSTS TO:

VILLAGE OF ORLAND PARK
14700 RAVINIA AVENUE
ORLAND PARK, IL 60462

ENERGY SUPPLY: CONTACT: ILYAS MOHIUDDEN
PHONE: (708) 235-2692
COMPANY: COMMONWEALTH EDISON
ACCOUNT NUMBER: 01350-79364

TS 1910
EAGLE

GANDHI AND ASSOCIATES, INC.
ENGINEERS AND PLANNERS
6035 N. NORTHWEST HIGHWAY
SUITE 306
CHICAGO, ILLINOIS 60631 TEL:773/774-5910

USER NAME = $USER$	DESIGNED - EA	REVISED -
	DRAWN - EA, AV	REVISED -
PLOT SCALE = 40.0000 ' / in.	CHECKED - NT, AV	REVISED -
PLOT DATE = $DATE$	DATE - 10/27/2022	REVISED -

STATE OF ILLINOIS
DEPARTMENT OF TRANSPORTATION

TEMPORARY CABLE PLAN
IL RTE 7 (SOUTHWEST HWY) AT 135TH ST

SCALE: N.T.S. | SHEET NO. OF SHEETS | STA. TO STA.

F.A.U. RTE.	SECTION	COUNTY	TOTAL SHEETS	SHEET NO.
3578	2019-001-R	COOK	255	136
		CONTRACT NO. 62H82		

FED. ROAD DIST. NO. _ | ILLINOIS | FED. AID PROJECT

FILE NAME = K:\PROJECTS\Projects 2019\PTB 191_Item 84_IL Rte 7\CADD_Sheets\21_SOUTHWEST HWY @ 135TH STREET_TEMP_CD.dgn

TEMPORARY SEQUENCE OF OPERATION

MOVEMENT		5 1	6 1	5 2	6 2	7 3	8 3	7 4	4 8	FLASH
PHASE		1+5	1+6	2+5	2+6	3+7	3+8	4+7	4+8	
INTERVAL		1 2 3 4	5 6	7 8	9 10A 10B	11 12 13 14	15 16 17A 17B	18 19 20A 20B	21 22A 22B	
CHANGE TO		1+6 2+5 2+6	2+6	2+6	3+7 3+8 4+7 4+8	3+8 4+7 1+5 1+6 2+5 2+6 4+8	4+8 1+5 1+6 2+5 2+6	4+8 1+5 1+6 2+5 2+6	1+5 1+6 2+5 2+6	
IL RTE 7 (SOUTHWEST HWY) NEAR RIGHT SPAN WIRE SIGNAL	N/B	R R R R	R R	G G	G Y R	R R R R	R R R R	R R R R	R R R	R
IL RTE 7 (SOUTHWEST HWY) TWO FAR SPAN WIRE SIGNALS	N/B	R ←G R ←Y R ←G R ←Y	R R	G ←G G ←Y	G Y R	R R R R	R R R R	R R R R	R R R	R
IL RTE 7 (SOUTHWEST HWY) NEAR RIGHT SPAN WIRE SIGNAL	S/B	R R R R	G G	R R	G Y R	R R R R	R R R R	R R R R	R R R	R
IL RTE 7 (SOUTHWEST HWY) TWO FAR SPAN WIRE SIGNALS	S/B	R ←G R ←G R ←Y R ←Y	G ←G G ←Y	R R	G Y R	R R R R	R R R R	R R R R	R R R	R
135TH ST NEAR RIGHT SPAN WIRE SIGNAL	E/B	R R R R	R R	R R	R R R	R R R R	R R R R	G G Y R	G Y R	R
135TH ST TWO FAR SPAN WIRE SIGNALS	E/B	R R R R	R R	R R	R R R	R ←G R ←Y R ←G R ←Y	R R R R	G ←G G ←Y Y R	G Y R	R
135TH ST NEAR RIGHT SPAN WIRE SIGNAL	W/B	R R R R	R R	R R	R R R	R R R R	G G Y R	R R R R	G Y R	R
135TH ST TWO FAR SPAN WIRE SIGNALS	W/B	R R R R	R R	R R	R R R	R ←G R ←G R ←Y R ←Y	G ←G G ←Y Y R	R R R R	G Y R	R

PHASE 2+6 SHALL BE PLACED ON RECALL

TEMPORARY RAILROAD PREEMPTION SEQUENCE OF OPERATION

																		PREEMPTOR NUMBER 3		PREEMPTOR NUMBER 4		PREEMPTOR NUMBER 2			
CHANGE FROM NORMAL SEQUENCE OF OPERATION INTERVAL NUMBER		1	5		7		9		11	15	18		21												
CHANGE FROM EMERGENCY VEHICLE PREEMPTION SEQUENCE OF OPERATION INTERVAL NUMBER																		2		3					
RAILROAD PREEMPTION SEQUENCE OF OPERATION INTERVAL NUMBER		1A	1B	1C	1D	1E	1F	1G	1H	1J	1K	1L	1M	1N	1P	1Q	1R	1S	2	3	4	5	CLEAR TO NORMAL SEQUENCE
CHANGE TO RAILROAD PREEMPTION SEQUENCE OF OPERATION INTERVAL NUMBER		2	1C	2	1E	2	1G	2	2	2	1L	2	1N	2	1Q	2	1S	2	3	4	5		
IL RTE 7 (SOUTHWEST HWY) NEAR RIGHT SPAN WIRE SIGNAL	N/B	R	R	R	Y	R	Y	R	R	R	R	R	R	R	Y	R	R	R	R	R	R	G	◊
IL RTE 7 (SOUTHWEST HWY) TWO FAR SPAN WIRE SIGNALS	N/B	R ←Y	R	R	Y	R	Y	R	R	R	R	R	R	R	Y	R	R	R	R	R	R	G	◊
IL RTE 7 (SOUTHWEST HWY) NEAR RIGHT SPAN WIRE SIGNAL	S/B	R	Y	R	R	R	Y	R	R	R	R	R	R	R	Y	R	R	R	R	R	R	G	◊
IL RTE 7 (SOUTHWEST HWY) TWO FAR SPAN WIRE SIGNALS	S/B	R ←Y	Y	R	R	R	Y	R	R	R	R	R	R	R	Y	R	R	R	R	R	R	G	◊
135TH ST NEAR RIGHT SPAN WIRE SIGNAL	E/B	R	R	R	R	R	R	R	R	R	Y	R	Y	R	R	R	Y	R	R	R	R	R	◊
135TH ST TWO FAR SPAN WIRE SIGNALS	E/B	R	R	R	R	R	R	R	R ←Y	R	Y	R	Y	R	R	R	Y	R	R	R	R	R	◊
135TH ST NEAR RIGHT SPAN WIRE SIGNAL	W/B	R	R	R	R	R	R	R	R	G	R	R	G	G	R	R	G	G	G	Y	R	R	◊
135TH ST TWO FAR SPAN WIRE SIGNALS	W/B	R	R	R	R	R	R	R	R ←G	G ←G	R	R	G	G	R	R	G	G	G ←G	Y	R	R	◊
																						HOLD	

◊ RAILROAD PREEMTION SEQUENCE SHALL PROVIDE THE PROPER CLEARANCE INTERVAL TO RESUME THE NORMAL SEQUENCE OF OPERATION OR PROPER CLEARANCE INTERVAL TO DISPLAY AN EMERGENCY VEHICLE INTERVAL (IF APPLICABLE) AFTER RAILROAD PREEMPTION INTERVAL 5 IS TERMINATED.

TS 1910
EAGLE

FILE NAME = K:\PROJECTS\Projects 2019\PTB 191_Item 04_IL Rte 7\CADD_Sheets\22_SOUTHWEST HWY @ 135TH STREET_TEMP_SOO_RRP.dgn

GANDHI AND ASSOCIATES, INC.
ENGINEERS AND PLANNERS
6035 N. NORTHWEST HIGHWAY
SUITE 306
CHICAGO, ILLINOIS 60631 TEL.(773)774-5980

USER NAME = $USER$	DESIGNED - EA	REVISED -	
	DRAWN - EA, AV	REVISED -	
PLOT SCALE = 40.0000 ' / in.	CHECKED - NT, AV	REVISED -	
PLOT DATE = $DATE$	DATE - 10/27/2022	REVISED -	

STATE OF ILLINOIS
DEPARTMENT OF TRANSPORTATION

TEMPORARY SEQUENCE OF OPERATION
AND TEMPORARY RAILROAD PREEMPTION SEQUENCE OF OPERATION
IL RTE 7 (SOUTHWEST HWY) AT 135TH ST

SCALE: N.T.S. | SHEET NO. OF SHEETS | STA. TO STA.

F.A.U. RTE.	SECTION	COUNTY	TOTAL SHEETS	SHEET NO.
3578	2019-001-R	COOK	255	137
		CONTRACT NO. 62H82		

FED. ROAD DIST. NO. _ | ILLINOIS | FED. AID PROJECT

TEMPORARY EMERGENCY VEHICLE PREEMPTION SEQUENCE OF OPERATION

																						PREEMPTOR NUMBER 3	PREEMPTOR NUMBER 4	
CHANGE FROM NORMAL SEQUENCE OF OPERATION INTERVAL NUMBER		1	5	5		7	7		9	9		11	15		15	18		18	21		21			
EMERGENCY VEHICLE PREEMPTION SEQUENCE OF OPERATION INTERVAL NUMBER		1A	1B	1C	1D	1E	1F	1G	1H	1J	1K	1L	1M	1N	1P	1Q	1R	1S	1T	1U	1V	2	3	CLEAR TO NORMAL SEQUENCE
CHANGE TO EMERGENCY VEHICLE PREEMPTION SEQUENCE OF OPERATION INTERVAL NUMBER		2 OR 3	2	1D	3	2	1G	3	2	1K	3	2 OR 3	1N	2	3	1R	2	3	1U	2	3			
IL RTE 7 (SOUTHWEST HWY) NEAR RIGHT SPAN WIRE SIGNAL	N/B	R	R	R	R	G	Y	R	G	Y	R	R	R	R	R	R	R	R	R	R	R	G	R	◊
IL RTE 7 (SOUTHWEST HWY) TWO FAR SPAN WIRE SIGNALS	N/B	R ←Y	R	R	R	G ←Y	Y	R	G	Y	R	R	R	R	R	R	R	R	R	R	R	G	R	◊
IL RTE 7 (SOUTHWEST HWY) NEAR RIGHT SPAN WIRE SIGNAL	S/B	R	G	Y	R	R	R	R	G	Y	R	R	R	R	R	R	R	R	R	R	R	G	R	◊
IL RTE 7 (SOUTHWEST HWY) TWO FAR SPAN WIRE SIGNALS	S/B	R ←Y	G ←Y	Y	R	R	R	R	G	Y	R	R	R	R	R	R	R	R	R	R	R	G	R	◊
135TH ST NEAR RIGHT SPAN WIRE SIGNAL	E/B	R	R	R	R	R	R	R	R	R	R	R	R	R	R	Y	R	G	Y	R	G	R	G	◊
135TH ST TWO FAR SPAN WIRE SIGNALS	E/B	R	R	R	R	R	R	R	R	R	R	R ←Y	R	R	R	Y	R	G ←Y	Y	R	G	R	G	◊
135TH ST NEAR RIGHT SPAN WIRE SIGNAL	W/B	R	R	R	R	R	R	R	R	R	R	R	Y	R	G	R	R	R	Y	R	G	R	G	◊
135TH ST TWO FAR SPAN WIRE SIGNALS	W/B	R	R	R	R	R	R	R	R	R	R	R ←Y	Y	R	G ←Y	R	R	R	Y	R	G	R	G	◊

◊ EMERGENCY VEHICLE SEQUENCE SHALL PROVIDE THE PROPER CLEARANCE INTERVAL TO RESUME THE NORMAL SEQUENCE OF OPERATION OR PROPER CLEARANCE INTERVAL TO DISPLAY A DIFFERENT EMERGENCY VEHICLE INTERVAL AFTER EMERGENCY VEHICLE INTERVAL 2 OR 3 IS TERMINATED.

TS 1910
EAGLE_____

GANDHI AND ASSOCIATES, INC.
ENGINEERS AND PLANNERS
6035 N. NORTHWEST HIGHWAY
SUITE 306
CHICAGO, ILLINOIS 60631 TEL./773/774-5910

USER NAME = $USER$	DESIGNED - EA	REVISED -
	DRAWN - EA, AV	REVISED -
PLOT SCALE = 40.0000 ' / in.	CHECKED - NT, AV	REVISED -
PLOT DATE = $DATE$	DATE - 10/27/2022	REVISED -

STATE OF ILLINOIS
DEPARTMENT OF TRANSPORTATION

TEMPORARY EMERGENCY VEHICLE PREEMPTION SEQUENCE OF OPERATION
IL RTE 7 (SOUTHWEST HWY) AT 135TH ST

SCALE: N.T.S. | SHEET NO. OF SHEETS | STA. TO STA.

F.A.U. RTE.	SECTION	COUNTY	TOTAL SHEETS	SHEET NO.
3578	2019-001-R	COOK	255	138

CONTRACT NO. 62H82

FED. ROAD DIST. NO. _ | ILLINOIS | FED. AID PROJECT

FILE NAME = K:\PROJECTS\Projects 2019\PTB 191.Item 04.IL Rte 7\CADD.Sheets\23.SOUTHWEST HWY @ 135TH STREET.TEMP.EVP.dgn

TEMPORARY SEQUENCE OF OPERATION FOR STAGE 2

MOVEMENT		5 2		6 2			4			FLASH
PHASE		2+5		2+6			4			
INTERVAL		1	2	3	4A	4B	5	6A	6B	
CHANGE TO			2+6		4			2+5 2+6		
IL RTE 7 (SOUTHWEST HWY) NEAR RIGHT SPAN WIRE SIGNAL	N/B	G	G	G	Y	R	R	R	R	R
IL RTE 7 (SOUTHWEST HWY) TWO FAR SPAN WIRE SIGNALS	N/B	G ←G	G ←Y	G	Y	R	R	R	R	R
IL RTE 7 (SOUTHWEST HWY) NEAR RIGHT SPAN WIRE SIGNAL	S/B	R	R	G	Y	R	R	R	R	R
IL RTE 7 (SOUTHWEST HWY) TWO FAR SPAN WIRE SIGNALS	S/B	R	R	G	Y	R	R	R	R	R
135TH ST NEAR RIGHT SPAN WIRE SIGNAL	E/B	R	R	R	R	R	G	Y	R	R
135TH ST TWO FAR SPAN WIRE SIGNALS	E/B	R	R	R	R	R	G	Y	R	R

PHASE 2+6 SHALL BE PLACED ON RECALL

TEMPORARY EMERGENCY VEHICLE PREEMPTION SEQUENCE OF OPERATION FOR STAGE 2

											PREEMPTOR NUMBER 3	PREEMPTOR NUMBER 4	
CHANGE FROM NORMAL SEQUENCE OF OPERATION INTERVAL NUMBER		1	1		3	3		5		5			
EMERGENCY VEHICLE PREEMPTION SEQUENCE OF OPERATION INTERVAL NUMBER		1A	1B	1C	1D	1E	1F	1G	1H	1J	2	3	CLEAR TO NORMAL SEQUENCE
CHANGE TO EMERGENCY VEHICLE PREEMPTION SEQUENCE OF OPERATION INTERVAL NUMBER		2	1C	3	2	1F	3	1H	2	3			
IL RTE 7 (SOUTHWEST HWY) NEAR RIGHT SPAN WIRE SIGNAL	N/B	G	Y	R	G	Y	R	R	R	R	G	R	◊
IL RTE 7 (SOUTHWEST HWY) TWO FAR SPAN WIRE SIGNALS	N/B	G ←Y	Y	R	G	Y	R	R	R	R	G	R	◊
IL RTE 7 (SOUTHWEST HWY) NEAR RIGHT SPAN WIRE SIGNAL	S/B	R	R	R	G	Y	R	R	R	R	G	R	◊
IL RTE 7 (SOUTHWEST HWY) TWO FAR SPAN WIRE SIGNALS	S/B	R	R	R	G	Y	R	R	R	R	G	R	◊
135TH ST NEAR RIGHT SPAN WIRE SIGNAL	E/B	R	R	R	R	R	R	Y	R	G	R	G	◊
135TH ST TWO FAR SPAN WIRE SIGNALS	E/B	R	R	R	R	R	R	Y	R	G	R	G	◊

◊ EMERGENCY VEHICLE SEQUENCE SHALL PROVIDE THE PROPER CLEARANCE INTERVAL TO RESUME THE NORMAL SEQUENCE OF OPERATION OR PROPER CLEARANCE INTERVAL TO DISPLAY A DIFFERENT EMERGENCY VEHICLE INTERVAL AFTER EMERGENCY VEHICLE INTERVAL 2 OR 3 IS TERMINATED.

TS 1910
EAGLE

FILE NAME = K:\PROJECTS\Projects 2019\PTB 191_Item 04_IL Rte 7\CADD_Sheets\24_SOUTHWEST HWY @ 135TH STREET_TEMP_SOO_EVP_STAGE 2.dgn

GANDHI AND ASSOCIATES, INC.
ENGINEERS AND PLANNERS
6035 N. NORTHWEST HIGHWAY
SUITE 306
CHICAGO, ILLINOIS 60631 TEL.773)774-5980

USER NAME = $USER$	DESIGNED - EA	REVISED -
	DRAWN - EA, AV	REVISED -
PLOT SCALE = 40.0000 ' / in.	CHECKED - NT, AV	REVISED -
PLOT DATE = $DATE$	DATE - 10/27/2022	REVISED -

STATE OF ILLINOIS
DEPARTMENT OF TRANSPORTATION

TEMPORARY SEQUENCE OF OPERATION AND TEMPORARY EMERGENCY VEHICLE PREEMPTION SEQUENCE OF OPERATION IL RTE 7 (SOUTHWEST HWY) AT 135TH ST – STAGE 2

SCALE: N.T.S. | SHEET NO. OF SHEETS | STA. TO STA.

F.A.U. RTE.	SECTION	COUNTY	TOTAL SHEETS	SHEET NO.
3578	2019-001-R	COOK	255	139
		CONTRACT NO. 62H82		

FED. ROAD DIST. NO. _ | ILLINOIS | FED. AID PROJECT

RAILROAD PREEMPTION REQUIREMENTS:

PRIOR TO INSTALLATION, THE CONTRACTOR SHALL SHOP TEST THE TRAFFIC CONTROLLER AND CABINET AT THE EQUIPMENT VENDOR'S FACILITY WITH STAFF OF THE ICC PRESENT.

THE CONTRACTOR WILL BE RESPONSIBLE FOR INSTALLING THE INTERCONNECT CABLE TO THE CROSSING WARNING SIGNAL CONTROL HOUSING. THE RAILROAD SIGNAL DEPARTMENT WILL BE RESPONSIBLE FOR TERMINATING THE CABLE AT THE RAILROAD EQUIPMENT.

THE CONTRACTOR WILL BE RESPONSIBLE FOR COORDINATING THE REQUIRED TESTING AND INSTALLATION OF THE INTERCONNECT CABLE TO THE CROSSING WARNING SIGNAL CONTROL HOUSING. REPRESENTATIVES FROM IDOT, THE CONTRACTOR, THE TRAFFIC CONTROLLER MANUFACTURER, ICC, AND RAILROAD SIGNAL DEPARTMENT MUST BE IN ATTENDANCE FOR THE TURN-ON INSPECTION.

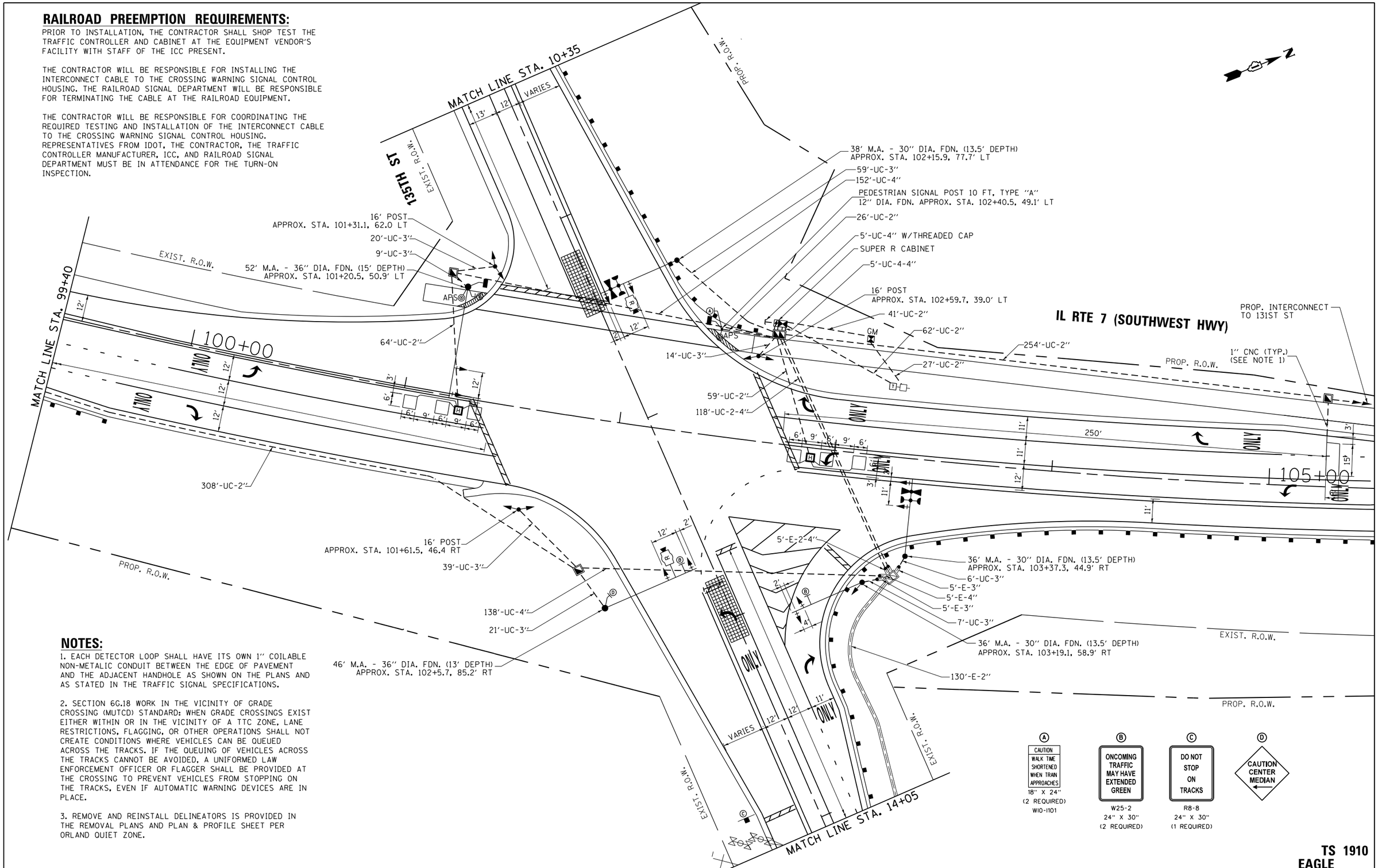

NOTES:

1. EACH DETECTOR LOOP SHALL HAVE ITS OWN 1" COILABLE NON-METALIC CONDUIT BETWEEN THE EDGE OF PAVEMENT AND THE ADJACENT HANDHOLE AS SHOWN ON THE PLANS AND AS STATED IN THE TRAFFIC SIGNAL SPECIFICATIONS.

2. SECTION 6G.18 WORK IN THE VICINITY OF GRADE CROSSING (MUTCD) STANDARD: WHEN GRADE CROSSINGS EXIST EITHER WITHIN OR IN THE VICINITY OF A TTC ZONE, LANE RESTRICTIONS, FLAGGING, OR OTHER OPERATIONS SHALL NOT CREATE CONDITIONS WHERE VEHICLES CAN BE QUEUED ACROSS THE TRACKS. IF THE QUEUING OF VEHICLES ACROSS THE TRACKS CANNOT BE AVOIDED, A UNIFORMED LAW ENFORCEMENT OFFICER OR FLAGGER SHALL BE PROVIDED AT THE CROSSING TO PREVENT VEHICLES FROM STOPPING ON THE TRACKS, EVEN IF AUTOMATIC WARNING DEVICES ARE IN PLACE.

3. REMOVE AND REINSTALL DELINEATORS IS PROVIDED IN THE REMOVAL PLANS AND PLAN & PROFILE SHEET PER ORLAND QUIET ZONE.

TS 1910
EAGLE

FILE NAME = K:\PROJECTS\Projects 2019\PTB 191.Item 04_IL Rte 7\CADD_Sheets\25_SOUTHWEST HWY @ 135TH STREET_INT.dgn

GANDHI AND ASSOCIATES, INC. ENGINEERS AND PLANNERS 6035 N. NORTHWEST HIGHWAY SUITE 306 CHICAGO, ILLINOIS 60631 TEL.(773)774-5910	USER NAME = $USER$	DESIGNED - EA	REVISED -	STATE OF ILLINOIS DEPARTMENT OF TRANSPORTATION	TRAFFIC SIGNAL MODERNIZATION PLAN IL RTE 7 (SOUTHWEST HWY) AT 135TH ST (SHEET 1 OF 2)
		DRAWN - EA, AV	REVISED -		
	PLOT SCALE = 40.0000 ' / in.	CHECKED - NT, AV	REVISED -		
	PLOT DATE = $DATE$	DATE - 10/27/2022	REVISED -		SCALE: 1"=20' SHEET NO. OF SHEETS STA. TO STA.

F.A.U. RTE.	SECTION	COUNTY	TOTAL SHEETS	SHEET NO.
3578	2019-001-R	COOK	255	140
		CONTRACT NO. 62H82		
FED. ROAD DIST. NO. _	ILLINOIS	FED. AID PROJECT		

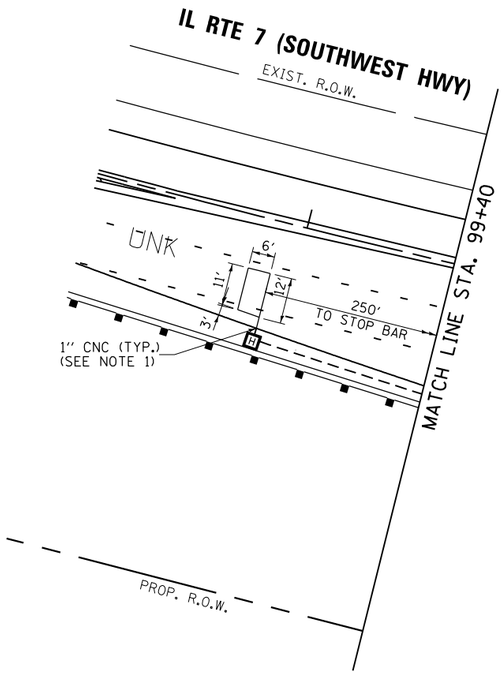

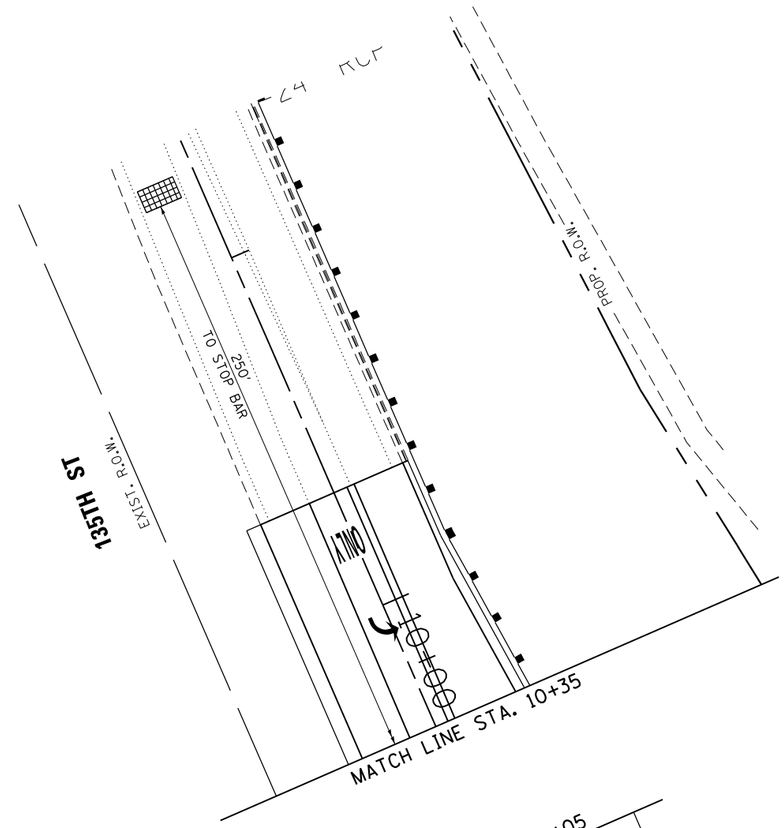

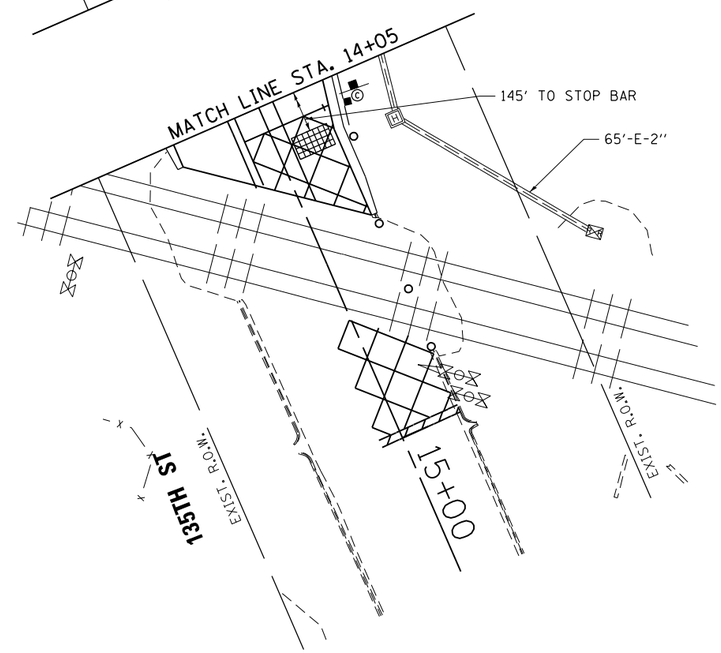

NOTES:

1. EACH DETECTOR LOOP SHALL HAVE ITS OWN 1" COILABLE NON-METALIC CONDUIT BETWEEN THE EDGE OF PAVEMENT AND THE ADJACENT HANDHOLE AS SHOWN ON THE PLANS AND AS STATED IN THE TRAFFIC SIGNAL SPECIFICATIONS.

TS 1910
EAGLE_____

GANDHI AND ASSOCIATES, INC. ENGINEERS AND PLANNERS 6035 N. NORTHWEST HIGHWAY SUITE 306 CHICAGO, ILLINOIS 60631 TEL.(773)774-5910	USER NAME = $USER$	DESIGNED - EA	REVISED -	STATE OF ILLINOIS DEPARTMENT OF TRANSPORTATION	TRAFFIC SIGNAL MODERNIZATION PLAN IL RTE 7 (SOUTHWEST HWY) AT 135TH ST (SHEET 2 OF 2)
		DRAWN - EA, AV	REVISED -		
	PLOT SCALE = 40.0000 ' / in.	CHECKED - NT, AV	REVISED -		
	PLOT DATE = $DATE$	DATE - 10/27/2022	REVISED -		SCALE: 1"=20' SHEET NO. OF SHEETS STA. TO STA.

F.A.U. RTE.	SECTION	COUNTY	TOTAL SHEETS	SHEET NO.
3578	2019-001-R	COOK	255	141
		CONTRACT NO. 62H82		
FED. ROAD DIST. NO. _	ILLINOIS	FED. AID PROJECT		

FILE NAME = K:\PROJECTS\Projects 2019\PTB 191_Item 04_IL Rte 7\CADD_Sheets\26_SOUTHWEST HWY @ 135TH STREET_INT_2.dgn

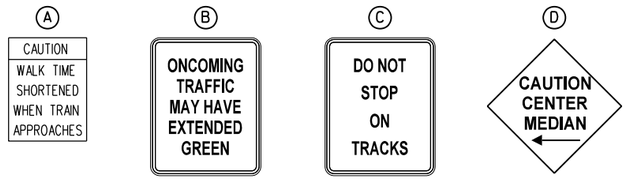

NOTES:

1. THIS SYSTEM SHALL USE A CELLULAR MODEM IN LIEU OF A TELEPHONE LINE. SEE SPECIAL PROVISION FOR CELLULAR COMMUNICATION SYSTEM.

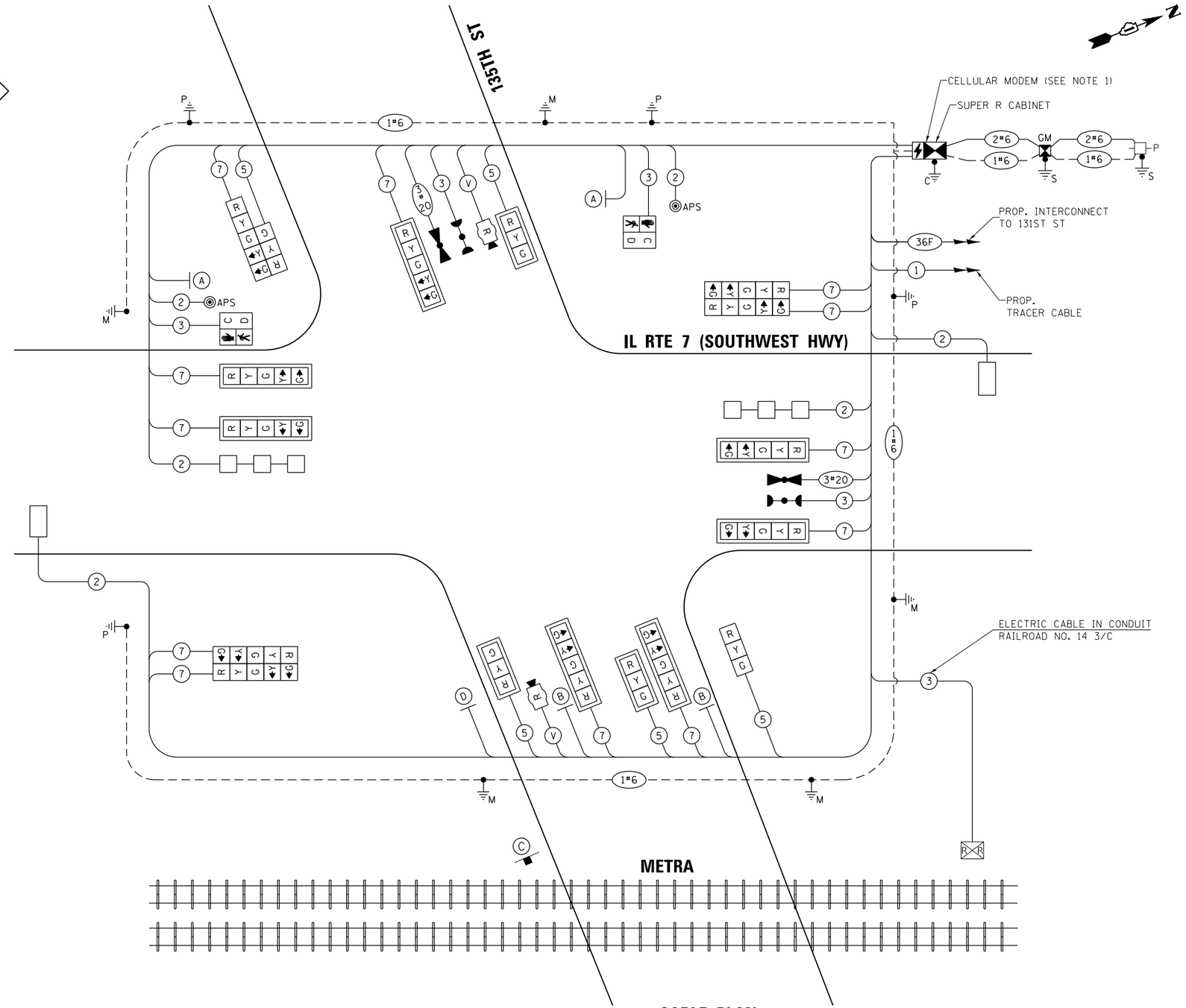

CABLE PLAN
(NOT TO SCALE)

TRAFFIC SIGNAL ELECTRICAL SERVICE REQUIREMENTS

TYPE	NO. OF LAMPS	LED WATTAGE	% OPERATION	TOTAL WATTAGE
SIGNAL (RED)	17	11	50	93.5
(YELLOW)	17	20	5	17.0
(GREEN)	17	12	45	91.8
PERMISSIVE ARROW	24	10	10	24.0
PED. SIGNAL	2	20	100	40.0
CONTROLLER	1	100	100	100.0
UPS	1	25	100	25.0
VIDEO SYSTEM	-	150	100	-
BLANK-OUT SIGN	-	25	5	-
FLASHER	-	-	50	-
STREET NAME SIGN	-	120	50	-
LUMINAIRE	-	240	50	-
			TOTAL =	391.3

ENERGY COSTS TO:

VILLAGE OF ORLAND PARK
14700 RAVINIA AVENUE
ORLAND PARK, IL 60462

ENERGY SUPPLY: CONTACT: ILYAS MOHIUDDEN
PHONE: (708) 235-2692
COMPANY: COMMONWEALTH EDISON
ACCOUNT NUMBER: 01350-79364

TS 1910
EAGLE

FILE NAME = K:\PROJECTS\Projects 2019\PTB 191_Item 84_IL Rte 7\CADD_Sheets\27_SOUTHWEST HWY @ 135TH STREET_CD.dgn

GANDHI AND ASSOCIATES, INC.
ENGINEERS AND PLANNERS
6035 N. NORTHWEST HIGHWAY
SUITE 306
CHICAGO, ILLINOIS 60631 TEL:(773)774-5910

USER NAME = $USER$	DESIGNED - EA	REVISED -	
	DRAWN - EA, AV	REVISED -	
PLOT SCALE = 40.0000 ' / in.	CHECKED - NT, AV	REVISED -	
PLOT DATE = $DATE$	DATE - 10/27/2022	REVISED -	

STATE OF ILLINOIS
DEPARTMENT OF TRANSPORTATION

CABLE PLAN
IL RTE 7 (SOUTHWEST HWY) AT 135TH ST

SCALE: N.T.S. | SHEET NO. OF SHEETS | STA. TO STA.

F.A.U. RTE.	SECTION	COUNTY	TOTAL SHEETS	SHEET NO.
3578	2019-001-R	COOK	255	142

CONTRACT NO. 62H82

FED. ROAD DIST. NO. _ | ILLINOIS | FED. AID PROJECT

SIGN PANEL – TYPE 1 OR TYPE 2

ALL DIMENSIONS ARE IN INCHES UNLESS NOTED OTHERWISE

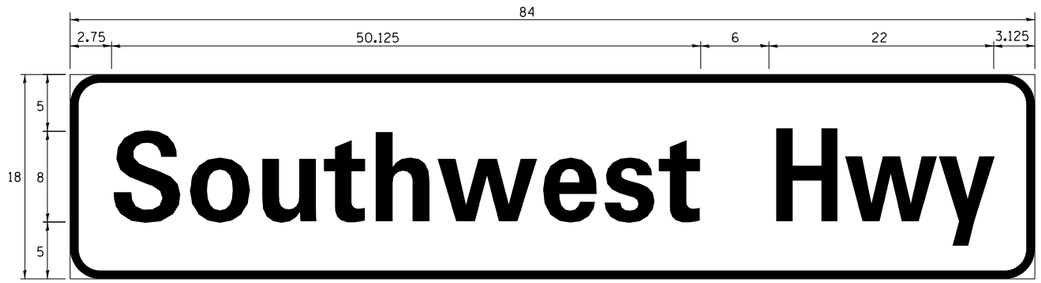

DESIGN SERIES	AREA (SQ FT)	SIGN PANEL TYPE	SHEETING TYPE	QTY. REQUIRED
D	10.5	2	ZZ	2

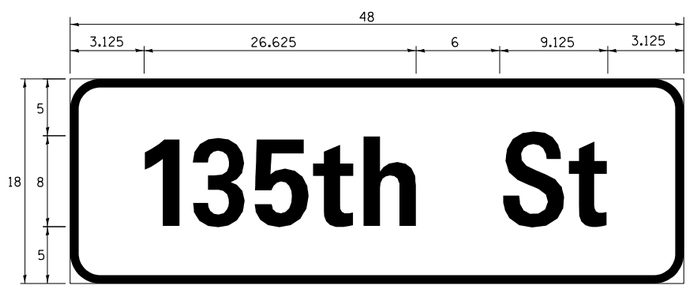

DESIGN SERIES	AREA (SQ FT)	SIGN PANEL TYPE	SHEETING TYPE	QTY. REQUIRED
D	6.0	1	ZZ	2

NOTE: FOR ADDITIONAL DESIGN AND INSTALLATION INFORMATION PLEASE SEE DISTRICT ONE MAST ARM MOUNTED STREET NAME SIGNS DETAIL.

SCHEDULE OF QUANTITIES

	ITEM DESCRIPTION	UNITS	TOTAL QTY.
	SIGN PANEL - TYPE 1	SQ FT	33
	SIGN PANEL - TYPE 2	SQ FT	21
	UNDERGROUND CONDUIT, GALVANIZED STEEL, 2" DIA.	FOOT	978
	UNDERGROUND CONDUIT, GALVANIZED STEEL, 3" DIA.	FOOT	178
	UNDERGROUND CONDUIT, GALVANIZED STEEL, 4" DIA.	FOOT	567
	HANDHOLE	EACH	4
	HEAVY-DUTY HANDHOLE	EACH	3
	DOUBLE HANDHOLE	EACH	2
	TRANSCEIVER - FIBER OPTIC	EACH	1
	ELECTRIC CABLE IN CONDUIT, SIGNAL NO. 14 2C	FOOT	247
	ELECTRIC CABLE IN CONDUIT, SIGNAL NO. 14 3C	FOOT	621
	ELECTRIC CABLE IN CONDUIT, SIGNAL NO. 14 5C	FOOT	1141
	ELECTRIC CABLE IN CONDUIT, SIGNAL NO. 14 7C	FOOT	2755
	ELECTRIC CABLE IN CONDUIT, LEAD-IN, NO. 14 1 PAIR	FOOT	1252
	ELECTRIC CABLE IN CONDUIT, RAILROAD, NO. 14 3C	FOOT	369
	ELECTRIC CABLE IN CONDUIT, SERVICE, NO. 6 2C	FOOT	141
	ELECTRIC CABLE IN CONDUIT, EQUIPMENT GROUNDING CONDUCTOR, NO. 6 1C	FOOT	1200
	TRAFFIC SIGNAL POST, GALVANIZED STEEL 16 FT.	EACH	3
	STEEL MAST ARM ASSEMBLY AND POLE, 36 FT.	EACH	2
	STEEL MAST ARM ASSEMBLY AND POLE, 38 FT.	EACH	1
	STEEL MAST ARM ASSEMBLY AND POLE, 46 FT.	EACH	1
	STEEL MAST ARM ASSEMBLY AND POLE, 52 FT.	EACH	1
	CONCRETE FOUNDATION, TYPE A	FOOT	16
	CONCRETE FOUNDATION, TYPE C	FOOT	4
	CONCRETE FOUNDATION, TYPE E 30-INCH DIAMETER	FOOT	40.5
	CONCRETE FOUNDATION, TYPE E 36-INCH DIAMETER	FOOT	28
	SIGNAL HEAD, LED, 1-FACE, 3-SECTION, MAST ARM MOUNTED	EACH	3
	SIGNAL HEAD, LED, 1-FACE, 3-SECTION, BRACKET MOUNTED	EACH	2
	SIGNAL HEAD, LED, 1-FACE, 5-SECTION, BRACKET MOUNTED	EACH	5
	SIGNAL HEAD, LED, 1-FACE, 5-SECTION, MAST ARM MOUNTED	EACH	7
	PEDESTRIAN SIGNAL HEAD, LED, 1-FACE, BRACKET MOUNTED WITH COUNTDOWN TIMER	EACH	2
	TRAFFIC SIGNAL BACKPLATE, LOUVERED, FORMED PLASTIC	EACH	10
	INDUCTIVE LOOP DETECTOR	EACH	4
	DETECTOR LOOP, TYPE I	FOOT	285
*	LIGHT DETECTOR	EACH	2
*	LIGHT DETECTOR AMPLIFIER	EACH	1
	TEMPORARY TRAFFIC SIGNAL INSTALLATION	EACH	1
	REMOVE EXISTING TRAFFIC SIGNAL EQUIPMENT	EACH	1
	REMOVE EXISTING HANDHOLE	EACH	10
	REMOVE EXISTING DOUBLE HANDHOLE	EACH	1
	REMOVE EXISTING CONCRETE FOUNDATION	EACH	9
*	EMERGENCY VEHICLE PRIORITY SYSTEM LINE SENSOR CABLE, NO. 20 3/C	FOOT	360
	SERVICE INSTALLATION, GROUND MOUNTED, METERED	EACH	1
	RAILROAD, FULL-ACTUATED CONTROLLER AND TYPE SUPER R CABINET (SPECIAL)	EACH	1
	PEDESTRIAN SIGNAL POST, 10 FT	EACH	1
	RADAR VEHICLE DETECTION SYSTEM, SINGLE APPROACH, STOP BAR AND FAR BACK	EACH	2
	UNINTERRUPTABLE POWER SUPPLY, SPECIAL	EACH	1
	ACCESSIBLE PEDESTRIAN SIGNALS	EACH	2
	CONCRETE FOUNDATION, TYPE A 12-INCH DIAMETER	FOOT	4
	RAILROAD PROTECTIVE LIABILITY INSURANCE	LSUM	1
	TEMPORARY TRAFFIC SIGNAL TIMING	EACH	1

* 100% COST TO VILLAGE OF ORLAND PARK

TS 1910
EAGLE

FILE NAME = K:\PROJECTS\Projects 2019\PTB 191_Item 04_IL Rte 7\CADD_Sheets\28_SOUTHWEST HWY @ 135TH STREET_CD2.dgn

GANDHI AND ASSOCIATES, INC.
ENGINEERS AND PLANNERS
6035 N. NORTHWEST HIGHWAY
SUITE 306
CHICAGO, ILLINOIS 60631 TEL:(773)774-5910

USER NAME = $USER$	DESIGNED - EA	REVISED -	
	DRAWN - EA, AV	REVISED -	
PLOT SCALE = 40.0000 ' / in.	CHECKED - NT, AV	REVISED -	
PLOT DATE = $DATE$	DATE - 10/27/2022	REVISED -	

STATE OF ILLINOIS
DEPARTMENT OF TRANSPORTATION

MAST ARM MOUNTED STREET NAME SIGNS
AND SCHEDULE OF QUANTITIES
IL RTE 7 (SOUTHWEST HWY) AT 135TH ST

SCALE: N.T.S. | SHEET NO. OF SHEETS | STA. TO STA.

F.A.U. RTE.	SECTION	COUNTY	TOTAL SHEETS	SHEET NO.
3578	2019-001-R	COOK	255	143

CONTRACT NO. 62H82

FED. ROAD DIST. NO. _ | ILLINOIS | FED. AID PROJECT

SEQUENCE OF OPERATION

MOVEMENT																																		FLASH
PHASE		1+5				1+6			2+5		2+6				3+7						3+8				4+7				4+8				
INTERVAL		1	2	3	4	5	6	7	8	9	10	11	12A	12B	13	14	15	16	17A	17B	18	19	20A	20B	21	22	23A	23B	24	25A	25B		
CHANGE TO			1+6	2+5	2+6	ø	ø	2+6		2+6	ø	ø	3+7 3+8 4+7 4+8			3+8	4+7	4+8	1+5 1+6 2+5 2+6			4+8	1+5 1+6 2+5 2+6			4+8	1+5 1+6 2+5 2+6			1+5 1+6 2+5 2+6		
IL RTE 7 (SOUTHWEST HWY) NEAR RIGHT AND FAR RIGHT MAST ARM SIGNALS	N/B	R	R	R	R	R	R	R	G	G	G	G	Y	R	R G→	R G→	R Y→	R Y→	R Y→	R	R G→	R Y→	R Y→	R	R	R	R	R	R	R	R	R
IL RTE 7 (SOUTHWEST HWY) FAR LEFT AND END MAST ARM SIGNALS	N/B	R ←G	R ←Y	R ←G	R ←Y	R	R	R	G ←G	G ←Y	G	G	Y	R	R	R	R	R	R	R	R	R	R	R	R	R	R	R	R	R	R	R
IL RTE 7 (SOUTHWEST HWY) NEAR RIGHT AND FAR RIGHT MAST ARM SIGNALS	S/B	R	R	R	R	G	G	G	R	R	G	G	Y	R	R G→	R Y→	R G→	R Y→	R Y→	R	R	R	R	R	R G→	R Y→	R Y→	R	R	R	R	R
IL RTE 7 (SOUTHWEST HWY) FAR LEFT AND END MAST ARM SIGNALS	S/B	R ←G	R ←G	R ←Y	R ←Y	G ←G	G ←G	G ←Y	R	R	G	G	Y	R	R	R	R	R	R	R	R	R	R	R	R	R	R	R	R	R	R	R
135TH ST NEAR RIGHT AND RIGHT MAST ARM SIGNALS	E/B	R	R	R	R	R	R	R	R	R	R	R	R	R	R	R	R	R	R	R	R	R	R	R	G	G	Y	R	G	Y	R	R
135TH ST FAR LEFT MAST ARM AND END MAST ARM SIGNALS	E/B	R	R	R	R	R	R	R	R	R	R	R	R	R	R ←G	R ←Y	R ←G	R ←Y	R ←Y	R	R	R	R	R	G ←G	G ←Y	Y	R	G	Y	R	R
135TH ST NEAR RIGHT, NEAR RIGHT MAST ARM, AND RIGHT MAST ARM SIGNALS	W/B	R	R	R	R	R	R	R	R	R	R	R	R	R	R	R	R	R	R	R	G	G	Y	R	R	R	R	R	G	Y	R	R
135TH ST FAR LEFT AND END MAST ARM SIGNALS	W/B	R	R	R	R	R	R	R	R	R	R	R	R	R	R ←G	R ←G	R ←Y	R ←Y	R ←Y	R	G ←G	G ←Y	Y	R	R	R	R	R	G	Y	R	R
PEDESTRIAN SIGNALS CROSSING 135TH ST ON WEST SIDE OF IL RTE 7 (SOUTHWEST HWY)		H	H	H	H	• P	•• FH	H	H	H	• P	•• FH	H	H	H	H	H	H	H	H	H	H	H	H	H	H	H	H	H	H	H	D

PHASE 2+6 SHALL BE PLACED ON RECALL

- • TO APPEAR ONLY UPON PUSH-BUTTON ACTUATION.
- •• FLASHING 🚶 IS TO TERMINATE AT THE COMPLETION OF THE PEDESTRIAN INTERVAL CLEARANCE.

ø THIS "🚶" OR FLASHING "✋" INTERVAL MAY FINISH TIMING IN THE BI-DIRECTIONAL STRAIGHT THROUGH MOVEMENT IF THE LEFT ARROW TIME IS NOT SUFFICIENT TO COMPLETE "🚶" OR FLASHING "✋" INTERVALS. "🚶" AND "✋" TIMINGS TO BE SET ONLY ON THE PHASES WHERE "🚶" AND FLASHING "✋" ARE INDICATED IN THE SEQUENCE OF OPERATION.

P = ILLUMINATED PERSON = WALK
FH = ILLUMINATED FLASHING HAND = FLASHING DON'T WALK
H = ILLUMINATED SOLID HAND = DON'T WALK
D = DARK

RAILROAD PREEMPTION SEQUENCE OF OPERATION

																					PREEMPTOR NUMBER 3		PREEMPTOR NUMBER 4		PREEMPTOR NUMBER 2									
CHANGE FROM NORMAL SEQUENCE OF OPERATION INTERVAL NUMBER		1	5		8		10		13	18	21		24																					
CHANGE FROM EMERGENCY VEHICLE PREEMPTION SEQUENCE OF OPERATION INTERVAL NUMBER															2		3																	
RAILROAD PREEMPTION SEQUENCE OF OPERATION INTERVAL NUMBER		1A	1B	1C	1D	1E	1F	1G	1H	1J	1K	1L	1M	1N	1P	1Q	1R	1S	2	3	4	5	CLEAR TO NORMAL SEQUENCE
CHANGE TO RAILROAD PREEMPTION SEQUENCE OF OPERATION INTERVAL NUMBER		2	1C	2	1E	2	1G	2	2	2	1L	2	1N	2	1Q	2	1S	2	3	4	5		
IL RTE 7 (SOUTHWEST HWY) NEAR RIGHT AND FAR RIGHT MAST ARM SIGNALS	N/B	R	R	R	Y	R	Y	R	R Y→	R Y→	R	R	R	R	Y	R	R	R	R	R	R	G	◊
IL RTE 7 (SOUTHWEST HWY) FAR LEFT AND END MAST ARM SIGNALS	N/B	R ←Y	R	R	Y	R	Y	R	R	R	R	R	R	R	Y	R	R	R	R	R	R	G	◊
IL RTE 7 (SOUTHWEST HWY) NEAR RIGHT AND FAR RIGHT MAST ARM SIGNALS	S/B	R	Y	R	R	R	Y	R	R Y→	R	R Y→	R	R	R	Y	R	R	R	R	R	R	G	◊
IL RTE 7 (SOUTHWEST HWY) FAR LEFT AND END MAST ARM SIGNALS	S/B	R ←Y	Y	R	R	R	Y	R	R	R	R	R	R	R	Y	R	R	R	R	R	R	G	◊
135TH ST NEAR RIGHT AND RIGHT MAST ARM SIGNALS	E/B	R	R	R	R	R	R	R	R	R	Y	R	Y	R	R	R	Y	R	R	R	R	R	◊
135TH ST FAR LEFT MAST ARM AND END MAST ARM SIGNALS	E/B	R	R	R	R	R	R	R	R ←Y	R	Y	R	Y	R	R	R	Y	R	R	R	R	R	◊
135TH ST NEAR RIGHT, NEAR RIGHT MAST ARM, AND RIGHT MAST ARM SIGNALS	W/B	R	R	R	R	R	R	R	R	G	R	R	G	G	R	R	G	G	G	Y	R	R	◊
135TH ST FAR LEFT AND END MAST ARM SIGNALS	W/B	R	R	R	R	R	R	R	R ←G	G ←G	R	R	G	G	R	R	G	G	G ←G	Y	R	R	◊
PEDESTRIAN SIGNALS CROSSING 135TH ST ON WEST SIDE OF IL RTE 7 (SOUTHWEST HWY)		H	FH	H	H	H	FH	H	H	H	H	H	H	H	H	H	H	H	H	H	H	H	◊
																						HOLD	

◊ RAILROAD PREEMTION SEQUENCE SHALL PROVIDE THE PROPER CLEARANCE INTERVAL TO RESUME THE NORMAL SEQUENCE OF OPERATION OR PROPER CLEARANCE INTERVAL TO DISPLAY AN EMERGENCY VEHICLE INTERVAL (IF APPLICABLE) AFTER RAILROAD PREEMPTION INTERVAL 5 IS TERMINATED.

TS 1910
EAGLE

FILE NAME = K:\PROJECTS\Projects 2019\PTB 191.Item 04.IL Rte 7\CADD.Sheets\29.SOUTHWEST HWY @ 135TH STREET.SOO.RRP.dgn

GANDHI AND ASSOCIATES, INC.
ENGINEERS AND PLANNERS
6035 N. NORTHWEST HIGHWAY
SUITE 306
CHICAGO, ILLINOIS 60631 TEL:773)774-5900

USER NAME = $USER$	DESIGNED - EA	REVISED -	
	DRAWN - EA, AV	REVISED -	
PLOT SCALE = 40.0000 ' / in.	CHECKED - NT, AV	REVISED -	
PLOT DATE = $DATE$	DATE - 10/27/2022	REVISED -	

STATE OF ILLINOIS
DEPARTMENT OF TRANSPORTATION

SEQUENCE OF OPERATION
AND RAILROAD PREEMPTION SEQUENCE OF OPERATION
IL RTE 7 (SOUTHWEST HWY) AT 135TH ST

SCALE: N.T.S. | SHEET NO. OF SHEETS | STA. TO STA.

F.A.U. RTE.	SECTION	COUNTY	TOTAL SHEETS	SHEET NO.
3578	2019-001-R	COOK	255	144
		CONTRACT NO. 62H82		
FED. ROAD DIST. NO. _	ILLINOIS	FED. AID PROJECT		

EMERGENCY VEHICLE PREEMPTION SEQUENCE OF OPERATION

CHANGE FROM NORMAL SEQUENCE OF OPERATION INTERVAL NUMBER		1	5		5			8	8		10	10			13	18		18	21		21	24		24	PREEMPTOR NUMBER 3	PREEMPTOR NUMBER 4	
EMERGENCY VEHICLE PREEMPTION SEQUENCE OF OPERATION INTERVAL NUMBER		1A	1B	1C	1D	1E	1F	1G	1H	1J	1K	1L	1M	1N	1P	1Q	1R	1S	1T	1U	1V	1W	1X	1Y	2	3	CLEAR TO NORMAL SEQUENCE
CHANGE TO EMERGENCY VEHICLE PREEMPTION SEQUENCE OF OPERATION INTERVAL NUMBER		2 OR 3	1C	2	1E	1F	3	2	1J	3	2	1M	1N	3	2 OR 3	1R	2	3	1U	2	3	1X	2	3			
IL RTE 7 (SOUTHWEST HWY) NEAR RIGHT AND FAR RIGHT MAST ARM SIGNALS	N/B	R	R	R	R	R	R	G	Y	R	G	G	Y	R	R Y→	R Y→	R	R Y→	R	R	R	R	R	R	G	R	◊
IL RTE 7 (SOUTHWEST HWY) FAR LEFT AND END MAST ARM SIGNALS	N/B	R ←Y	R	R	R	R	R	G ←Y	Y	R	G	G	Y	R	R	R	R	R	R	R	R	R	R	R	G	R	◊
IL RTE 7 (SOUTHWEST HWY) NEAR RIGHT AND FAR RIGHT MAST ARM SIGNALS	S/B	R	G	G	G	Y	R	R	R	R	G	G	Y	R	R Y→	R	R	R	R Y→	R	R Y→	R	R	R	G	R	◊
IL RTE 7 (SOUTHWEST HWY) FAR LEFT AND END MAST ARM SIGNALS	S/B	R ←Y	G ←G	G ←Y	G ←G	Y	R	R	R	R	G	G	Y	R	R	R	R	R	R	R	R	R	R	R	G	R	◊
135TH ST NEAR RIGHT AND RIGHT MAST ARM SIGNALS	E/B	R	R	R	R	R	R	R	R	R	R	R	R	R	R	R	R	R	Y	R	G	Y	R	G	R	G	◊
135TH ST FAR LEFT MAST ARM AND END MAST ARM SIGNALS	E/B	R	R	R	R	R	R	R	R	R	R	R	R	R	R ←Y	R	R	R	Y	R	G ←Y	Y	R	G	R	G	◊
135TH ST NEAR RIGHT, NEAR RIGHT MAST ARM, AND RIGHT MAST ARM SIGNALS	W/B	R	R	R	R	R	R	R	R	R	R	R	R	R	R	Y	R	G	R	R	R	Y	R	G	R	G	◊
135TH ST FAR LEFT AND END MAST ARM SIGNALS	W/B	R	R	R	R	R	R	R	R	R	R	R	R	R	R ←Y	Y	R	G ←Y	R	R	R	Y	R	G	R	G	◊
PEDESTRIAN SIGNALS CROSSING 135TH ST ON WEST SIDE OF IL RTE 7 (SOUTHWEST HWY)		H	FH	H	FH	FH	H	H	H	H	FH	FH	FH	H	H	H	H	H	H	H	H	H	H	H	H	H	◊

◊ EMERGENCY VEHICLE SEQUENCE SHALL PROVIDE THE PROPER CLEARANCE INTERVAL TO RESUME THE NORMAL SEQUENCE OF OPERATION OR PROPER CLEARANCE INTERVAL TO DISPLAY A DIFFERENT EMERGENCY VEHICLE INTERVAL AFTER EMERGENCY VEHICLE INTERVAL 2 OR 3 IS TERMINATED.

TS 1910
EAGLE_____

FILE NAME = K:\PROJECTS\Projects 2019\PTB 191.Item 84.IL Rte 7\CADD.Sheets\30.SOUTHWEST HWY @ 135TH STREET_EVP.dgn

GANDHI AND ASSOCIATES, INC.
ENGINEERS AND PLANNERS
6035 N. NORTHWEST HIGHWAY
SUITE 306
CHICAGO, ILLINOIS 60631 TEL.(773)774-5910

USER NAME = $USER$	DESIGNED - EA	REVISED -	
	DRAWN - EA, AV	REVISED -	
PLOT SCALE = 40.0000 ' / in.	CHECKED - NT, AV	REVISED -	
PLOT DATE = $DATE$	DATE - 10/27/2022	REVISED -	

STATE OF ILLINOIS
DEPARTMENT OF TRANSPORTATION

EMERGENCY VEHICLE PREEMPTION SEQUENCE OF OPERATION
IL RTE 7 (SOUTHWEST HWY) AT 135TH ST

SCALE: N.T.S. | SHEET NO. OF SHEETS | STA. TO STA.

F.A.U. RTE.	SECTION	COUNTY	TOTAL SHEETS	SHEET NO.
3578	2019-001-R	COOK	255	145

CONTRACT NO. 62H82

FED. ROAD DIST. NO. _ | ILLINOIS | FED. AID PROJECT

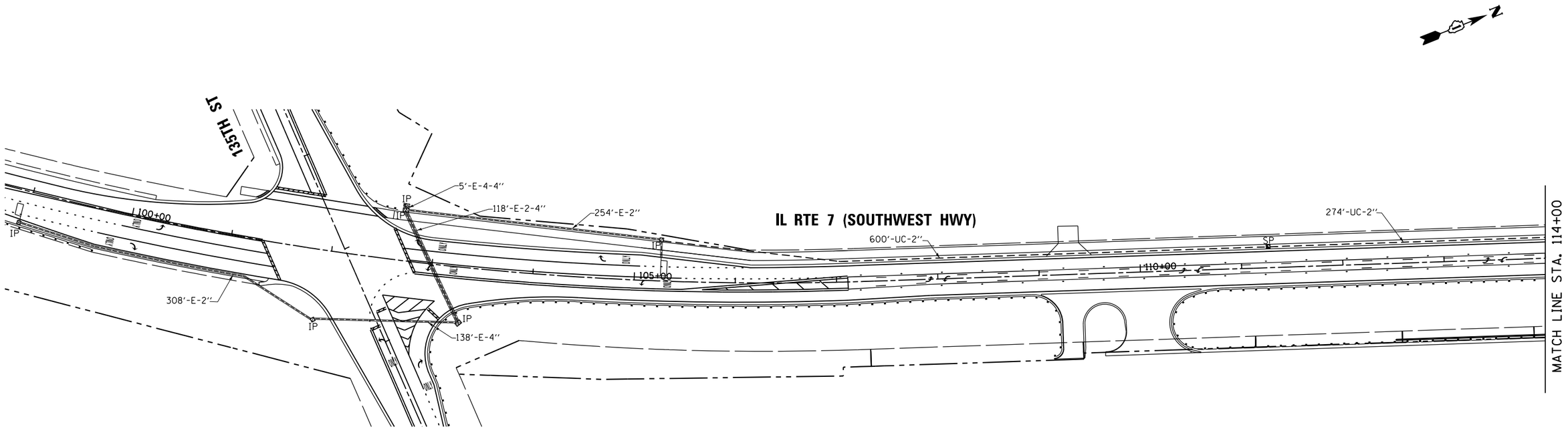

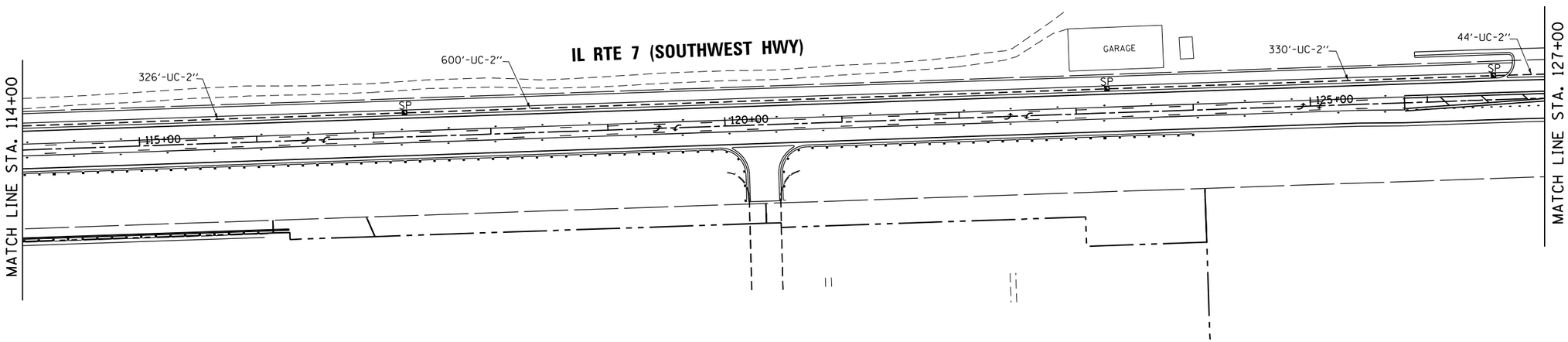

EAGLE_____

FILE NAME = K:\PROJECTS\Projects 2019\PTB 191.Item 84.IL Rte 7\CADD.Sheets\31.INTERCONNECT.PROPOSED.dgn

GANDHI AND ASSOCIATES, INC.
ENGINEERS AND PLANNERS
6035 N. NORTHWEST HIGHWAY
SUITE 306
CHICAGO, ILLINOIS 60631 TEL.(773)774-5910

USER NAME = $USER$	DESIGNED - EA	REVISED -	
	DRAWN - EA, AV	REVISED -	
PLOT SCALE = 100.0000 ' / in.	CHECKED - NT, AV	REVISED -	
PLOT DATE = $DATE$	DATE - 10/27/2022	REVISED -	

STATE OF ILLINOIS
DEPARTMENT OF TRANSPORTATION

PROPOSED INTERCONNECT PLAN
IL RTE 7 (SOUTHWEST HWY) FROM 135TH ST TO 131ST ST
(SHEET 1 OF 2)

SCALE: 1"=50' | SHEET NO. OF SHEETS | STA. TO STA.

F.A.U. RTE.	SECTION	COUNTY	TOTAL SHEETS	SHEET NO.
3578	2019-001-R	COOK	255	146

CONTRACT NO. 62H82

FED. ROAD DIST. NO. 1 | ILLINOIS | FED. AID PROJECT

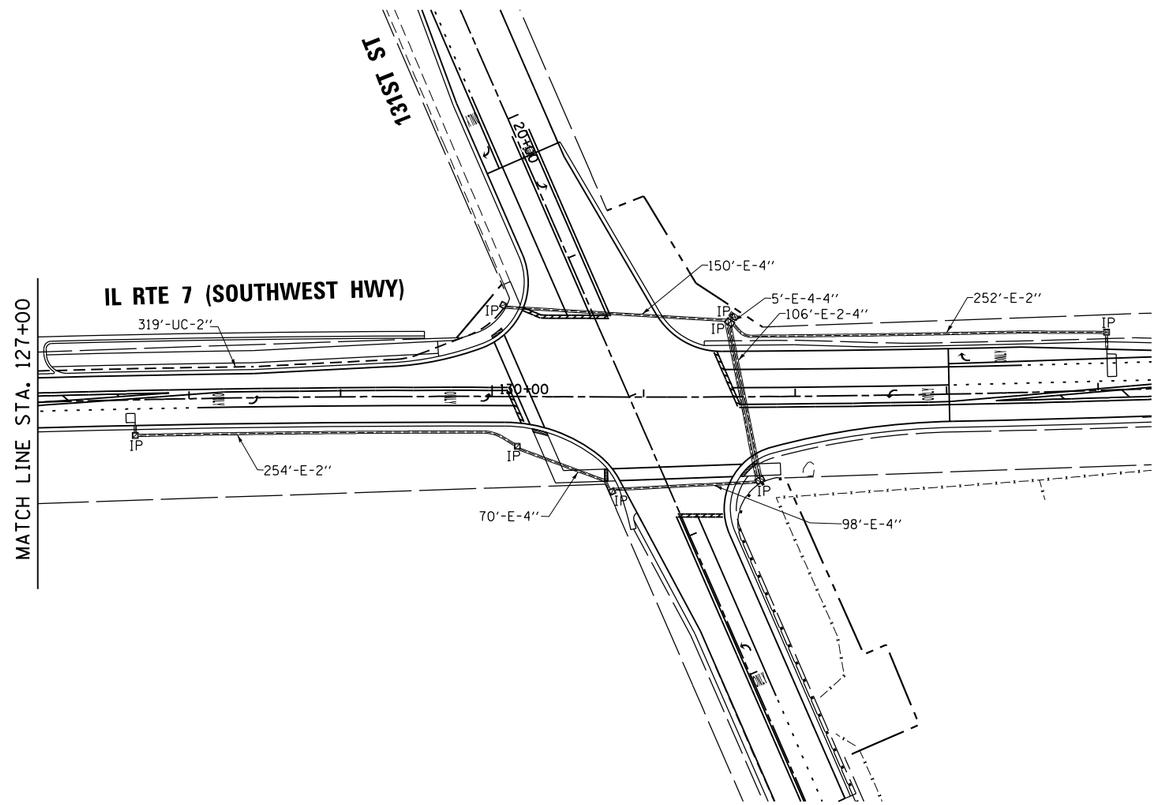

EAGLE_____

GANDHI AND ASSOCIATES, INC. ENGINEERS AND PLANNERS 6035 N. NORTHWEST HIGHWAY SUITE 306 CHICAGO, ILLINOIS 60631 TEL.(773)774-5900	USER NAME = $USER$	DESIGNED - EA	REVISED -	STATE OF ILLINOIS DEPARTMENT OF TRANSPORTATION	PROPOSED INTERCONNECT PLAN IL RTE 7 (SOUTHWEST HWY) FROM 135TH ST TO 131ST ST (SHEET 2 OF 2)	F.A.U. RTE.	SECTION	COUNTY	TOTAL SHEETS	SHEET NO.
		DRAWN - EA, AV	REVISED -			3578	2019-001-R	COOK	255	147
	PLOT SCALE = 100.0000 ' / in.	CHECKED - NT, AV	REVISED -					CONTRACT NO. 62H82		
	PLOT DATE = $DATE$	DATE - 10/27/2022	REVISED -		SCALE: 1"=50' SHEET NO. OF SHEETS STA. TO STA.	FED. ROAD DIST. NO. 1	ILLINOIS	FED. AID PROJECT		

FILE NAME = K:\PROJECTS\Projects 2019\PTB 191_Item 04_IL Rte 7\CADD_Sheets\32_INTERCONNECT_PROPOSED_2.dgn

NOTES

1. THE FOLLOWING PEOPLE NEED TO BE NOTIFIED A MINIMUM OF SEVEN (7) WORKING DAYS PRIOR TO THE START OF CONSTRUCTION TO ALLOW SUFFICIENT TIME FOR INSPECTION OF THE EXISTING TRAFFIC SIGNAL INSTALLATION AND TRANSFER OF MAINTENANCE TO THE CONTRACTOR:

IDOT AREA TRAFFIC SIGNAL MAINTENANCE AND OPERATIONS ENGINEER
IDOT TRAFFIC SIGNAL SYSTEM AND RAILROAD ENGINEER
DEPARTMENT'S ELECTRICAL MAINTENANCE CONTRACTOR
ILLINOIS COMMERCE COMMISSION, STAN MILEWSKI. (815) 463-8387

2. THIS SYSTEM SHALL USE A CELLULAR MODEM IN LIEU OF A TELEPHONE LINE, SEE SPECIAL PROVISION FOR CELLULAR COMMUNICATION SYSTEM.

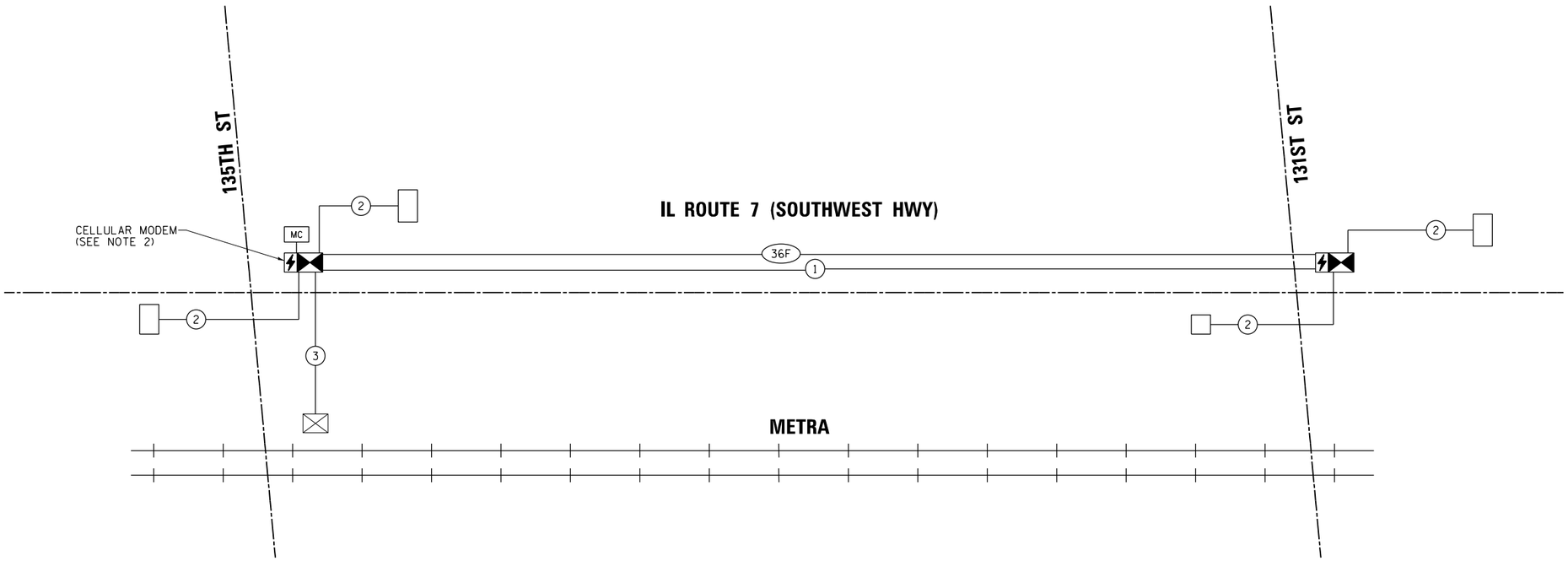

NOTE:

"TEMPORARY TRAFFIC SIGNAL TIMING", ONE (1) EACH IS INCLUDED IN THE SCHEDULE OF QUANTITIES FOR TRAFFIC SIGNAL INTERCONNECT ITEMS FOR THE DETOUR ROUTE INTERSECTIONS AFFECTED BY THIS PROJECT. THE AFFECTED INTERSECTIONS ON THE DETOUR ROUTE FOR WHICH "TEMPORARY TRAFFIC SIGNAL TIMING" QUANTITY IS PROVIDED ARE:

1) IL RTE 43 (HARLEM AVE) AT 131ST ST
2) IL RTE 43 (HARLEM AVE) AT 135TH ST

THE ORIGINAL SIGNAL TIMINGS SHALL BE RESTORED AT THESE INTERSECTIONS AFTER THE DETOUR IS REMOVED, THE COST OF WHICH SHALL BE INCLUDED IN THIS PAY ITEM.

NOTE:
THE SCAT CONSULTANT WILL DETERMINE THE LOCATION OF THE SYSTEM DETECTORS.

SCHEDULE OF QUANTITIES

ITEM DESCRIPTION	UNITS	TOTAL QTY.
UNDERGROUND CONDUIT, GALVANIZED STEEL, 2" DIA.	FOOT	2493
HANDHOLE	EACH	4
ELECTRIC CABLE IN CONDUIT, TRACER, NO. 14 1C	FOOT	2959
MASTER CONTROLLER (SPECIAL)	EACH	1
FIBER OPTIC CABLE IN CONDUIT, NO. 62.5/125, MM12F SM24F	FOOT	2959
OPTIMIZE TRAFFIC SIGNAL SYSTEM	EACH	1
TEMPORARY TRAFFIC SIGNAL TIMING	EACH	2

EAGLE_____

GANDHI AND ASSOCIATES, INC.
ENGINEERS AND PLANNERS
6035 N. NORTHWEST HIGHWAY
SUITE 306
CHICAGO, ILLINOIS 60631 TEL.(773)774-5900

USER NAME = $USER$	DESIGNED - EA	REVISED -
	DRAWN - EA, AV	REVISED -
PLOT SCALE = 100.0000 ' / in.	CHECKED - NT, AV	REVISED -
PLOT DATE = $DATE$	DATE - 10/27/2022	REVISED -

STATE OF ILLINOIS
DEPARTMENT OF TRANSPORTATION

PROPOSED INTERCONNECT SCHEMATIC
IL RTE 7 (SOUTHWEST HWY) FROM 135TH ST TO 131ST ST

SCALE: N.T.S. | SHEET NO. OF SHEETS | STA. TO STA.

F.A.U. RTE.	SECTION	COUNTY	TOTAL SHEETS	SHEET NO.
3578	2019-001-R	COOK	255	148
		CONTRACT NO. 62H82		

FED. ROAD DIST. NO. 1 | ILLINOIS | FED. AID PROJECT

FILE NAME = K:\PROJECTS\Projects 2019\PTB 191.Item 04.IL Rte 7\CADD.Sheets\33.INTERCONNECT_PROPOSED SCHEMATIC.dgn

Bench Mark: BM #5: Cut " □ " in Northwest corner of concrete sidewalk in front of "Orland Industrial Park" along IL Rte. 7, near Sta. 86+92 Lt. Elevation = 677.68 (NAVD88).

Existing Structure: None.

Stage construction: Temporary lane closures with flaggers for stage construction will be utilized to maintain one lane in each direction open to traffic during construction.

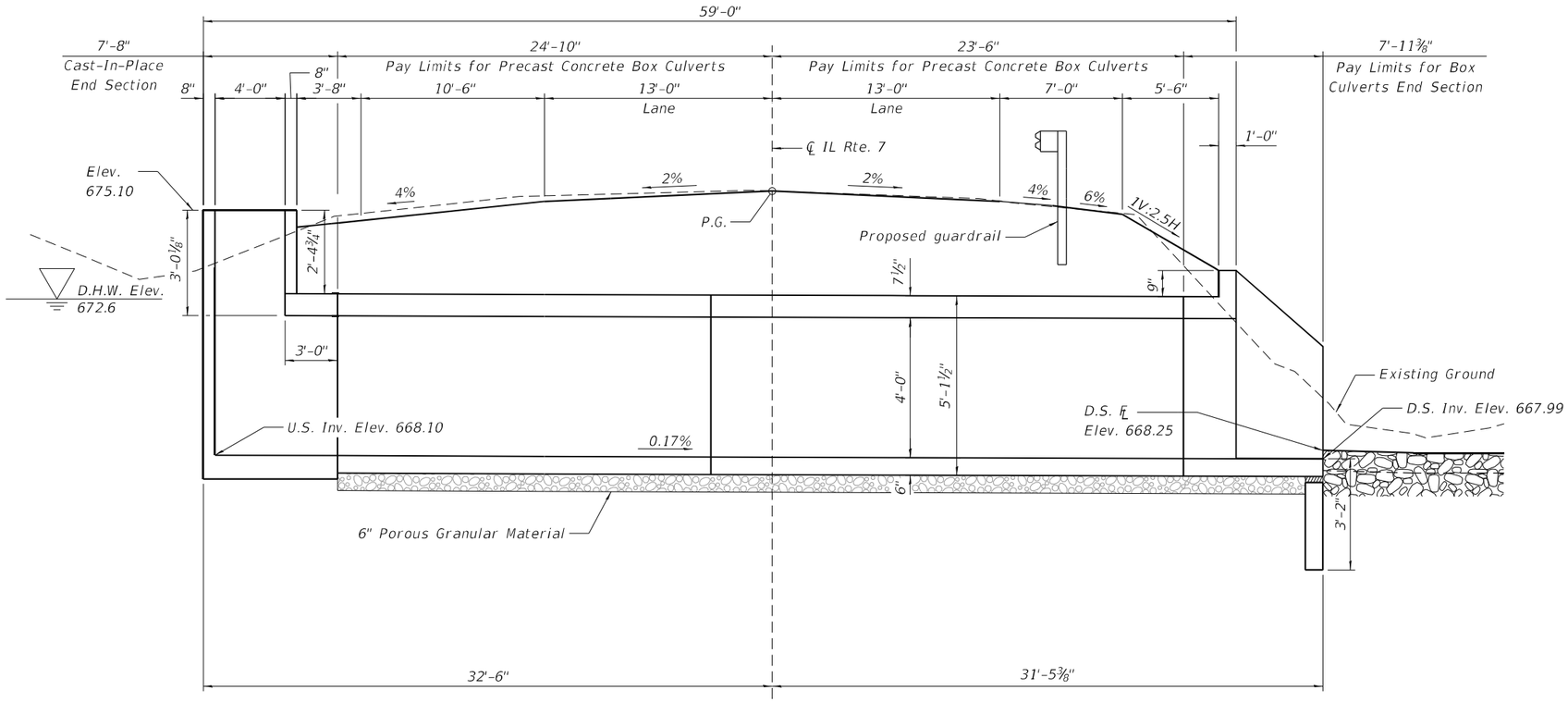

LONGITUDINAL SECTION

(All distances measured along ℄ of culvert)

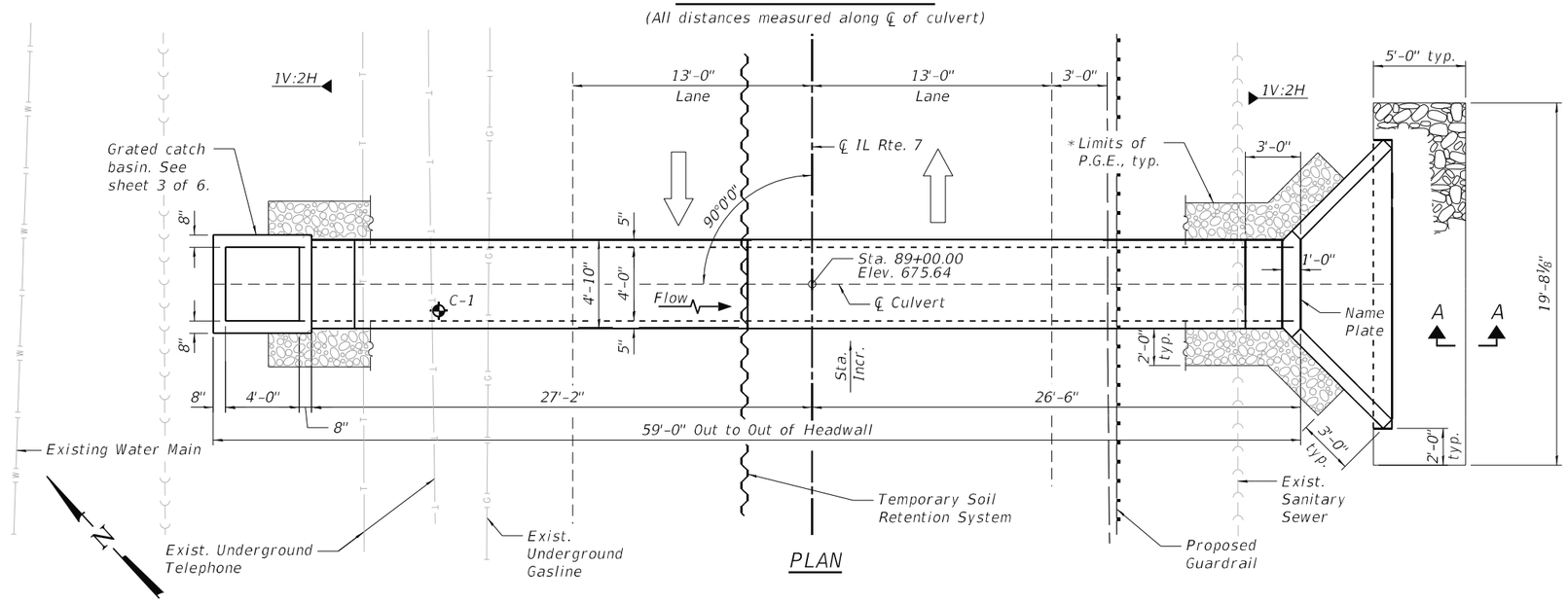

PLAN

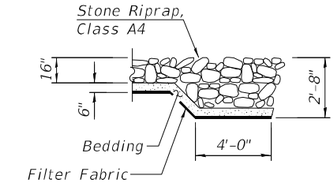

SECTION A-A

* 2'-0" width of P.G.E. to be installed full length of proposed culvert, to 3'-0" from the end of the proposed wingwalls. Adjacent to culvert, vertical limits are from bottom of bottom slab to top of top slab. Along wingwalls, vertical limits are from bottom of culvert bottom slab to 1'-0" below top of wingwall. See Pay Limits for Porous Granular Embankment detail on sheet 2 of 6. P.G.E. behind wingwalls shall be capped with a 12" thick layer of impervious material. Cost of impervious material shall be included in the cost of Porous Granular Embankment.

DESIGN SPECIFICATIONS

2020 AASHTO LRFD Bridge Design Specifications, 9th Edition

LOADING HL-93

Allow 50#/sq. ft. for future wearing surface.

DESIGN STRESSES

PRECAST UNITS (New Construction)

f'c = 5,000 psi

fy = 65,000 psi (Welded Wire Reinforcement)

FIELD UNITS (New Construction)

f'c = 3,500 psi

fy = 60,000 psi (Reinforcement)

INDEX OF SHEETS

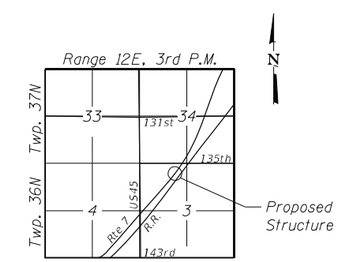

LOCATION SKETCH

GENERAL PLAN AND ELEVATION
IL RTE. 7 OVER EB TRIB. OUT 26
F.A.U. RTE. 3578 SEC. 2019-001-R
COOK COUNTY
STATION 89+00.00
S.N. 016-8349

MODEL: Default
FILE NAME: E:\1902\Struct\Final Design\Design Plans\CADD_Sheets\0168349-D162H82-001-GPE.dgn

LIN ENGINEERING, LTD. Consulting Engineers Springfield, Illinois	USER NAME = Mike Haley	DESIGNED - AGJ	REVISED -	STATE OF ILLINOIS DEPARTMENT OF TRANSPORTATION	GENERAL PLAN AND ELEVATION STRUCTURE NO. 016-8349
		CHECKED - VPT	REVISED -		
	PLOT TIME = 1:35:33 PM	DRAWN - AGJ	REVISED -		SHEET 1 OF 6 SHEETS
	PLOT DATE = 12/23/2022	CHECKED - VPT	REVISED -		

F.A.U. RTE.	SECTION	COUNTY	TOTAL SHEETS	SHEET NO.
3578	2019-001-R	COOK	255	149
		CONTRACT NO. 62H82		
		ILLINOIS FED. AID PROJECT		

12/23/2022 1:35:33 PM

GENERAL NOTES

The precast box culvert sections shall conform to the requirements of ASTM C 1577.

Drain holes shall be provided on exterior culvert walls for each precast box segment with a clear rise greater than 3 ft. The drain hole shall be located within 1/3 of the clear rise of the box culvert, shall not intercept the haunch, and shall conform to the requirements of Article 503.11 of the Standard Specifications.

Nonwoven geotextile fabric shall conform to the requirements of Art. 1080.01 of the Standard Specifications. The minimum weight of the fabric shall be 6 ounces per square yard, unless noted otherwise.

Precast concrete box culverts and box culvert end sections shall be backfilled with Porous Granular Embankment in the required excavation areas on the sides of the box culvert from the top of the box culvert to the bottom of the box culvert. This area of P.G.E. is included in the Porous Granular Embankment pay item. The 6-inch thick layer of porous granular material required under the precast concrete box culvert, according to Section 540.06 of the Standard Specifications, shall also apply to the end sections. Cost of this porous granular material will not be paid for separately but shall be included in the unit price of the work for which it is required.

See Special Provisions and Roadway and Maintenance of Traffic plans for time restrictions relative to installation of the structure.

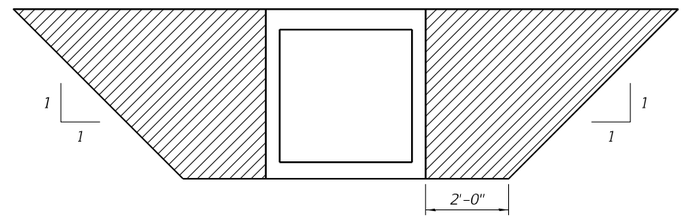

PAY LIMITS FOR POROUS GRANULAR EMBANKMENT

(Hatched Area)

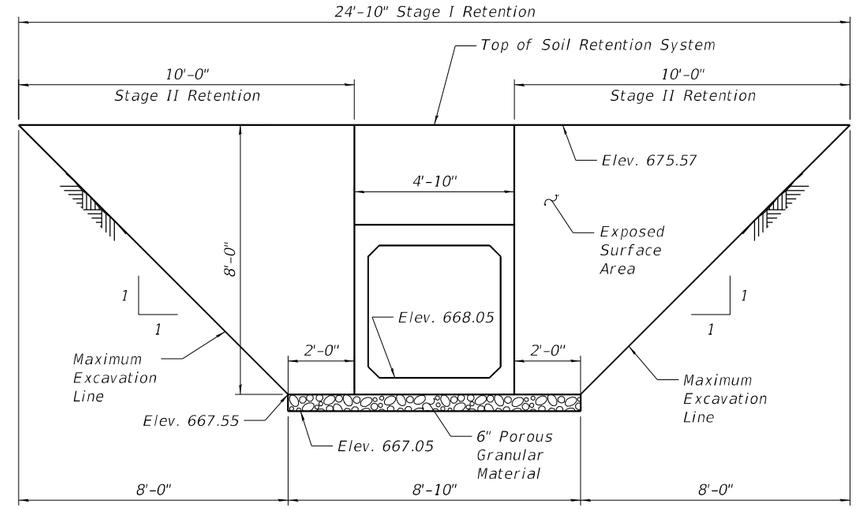

TEMPORARY SOIL RETENTION SYSTEM

A cantilevered sheet piling design does not appear feasible and additional members or other retention systems may be necessary. The Contractor shall submit a Temporary Soil Retention System design including plan details and calculations for review and acceptance by the Engineer.

STATION 89+00.00
BUILT 202_ BY
STATE OF ILLINOIS
F.A.U. RT. 3578 SEC. 2019-001-R
LOADING HL-93
STR. NO. 016-8349

NAME PLATE

See Std. 515001

WATERWAY INFORMATION

Drainage Area = 4.13 sq. mi. Low Grade Elev. = 676.25 @ Sta. 86+53

Flood	Freq. Yr.	Q C.F.S.	Opening Sq. Ft. Exist.	Opening Sq. Ft. Prop.	Nat. H.W.E.	Head - Ft. Exist.	Head - Ft. Prop.	Headwater El. Exist.	Headwater El. Prop.
	10	23	3.1	3.1	671.8	2.6	1.6	674.4	673.4
Design	50	28	3.1	3.1	672.6	3.3	2.2	675.9	674.8
Base	100	27	3.1	3.1	673.0	3.0	2.2	676.0	675.2
Overtopping									
Max. Calc.	100	27	3.1	3.1	673.0	3.0	2.2	676.0	675.2

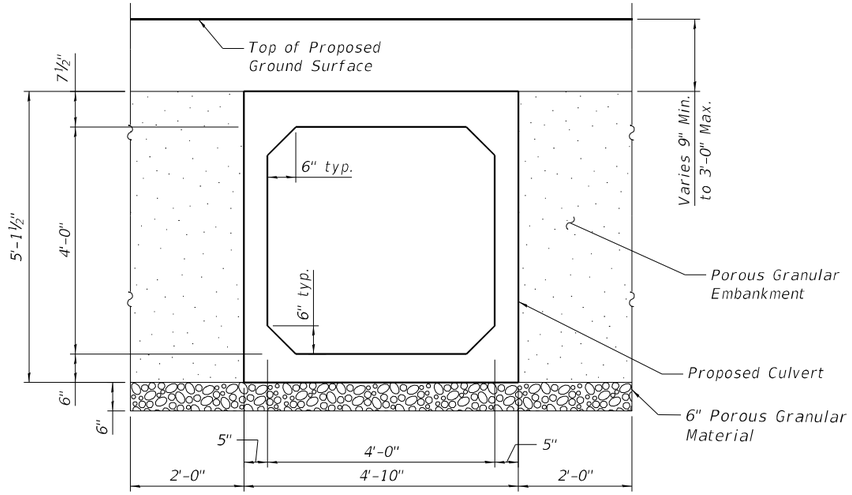

SECTION THRU PRECAST BOX CULVERT

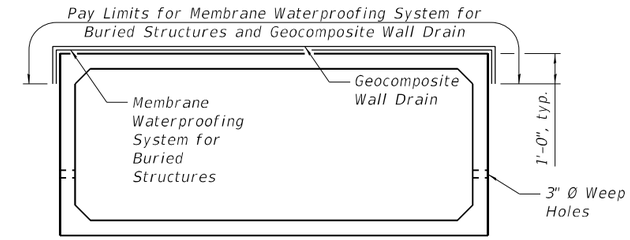

LIMITS OF MEMBRANE WATERPROOFING

Longitudinal limits of membrane waterproofing for the precast concrete culvert are along the full length between the headwalls.

CULVERT CONSTRUCTION SEQUENCE

1. Close Stage I to all traffic and place TSRS.
2. Perform construction of new structure in Stage I.
3. Move Stage II traffic to portion built in Stage I.
4. Perform construction of new structure in Stage II.
5. Open roadway to traffic.

PRECAST BOX CULVERT SCHEDULE (ASTM C1577)

Station	Size (Span x Height)	Skew	Design Fill Min.	Design Fill Max.
89+00.00	4'-0" x 4'-0"	0°00'00"	2'-8"	3'-0"

The Design Fill heights shown in the culvert schedule are located between the outside edges of pavement.

TOTAL BILL OF MATERIAL

ITEM	UNIT	TOTAL
Porous Granular Embankment	Cu. Yd.	100
Stone Riprap, Class A4	Sq. Yd.	11
Filter Fabric	Sq. Yd.	11
Concrete Structures	Cu. Yd.	6.3
Reinforcement Bars	Pound	730
Name Plates	Each	1
Temporary Soil Retention System	Sq. Ft.	137
Box Culvert End Sections, Culvert No. 1	Each	1
Precast Concrete Box Culverts 4'x4'	Foot	49
Geocomposite Wall Drain	Sq. Yd.	40
Membrane Waterproofing System for Buried Structures	Sq. Yd.	40

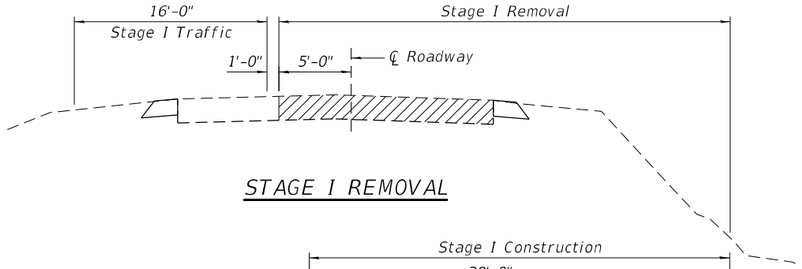

STAGE I REMOVAL

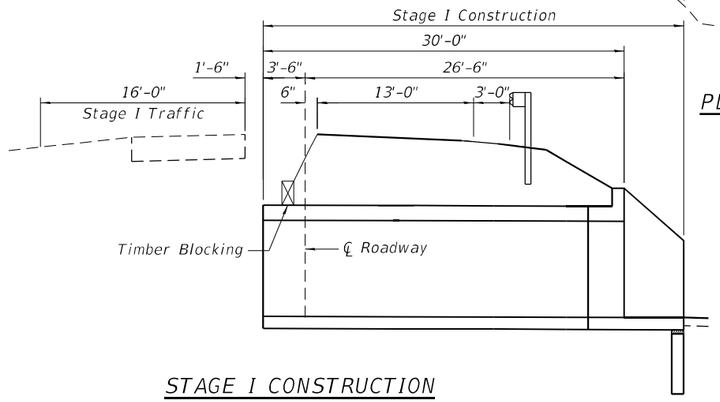

STAGE I CONSTRUCTION

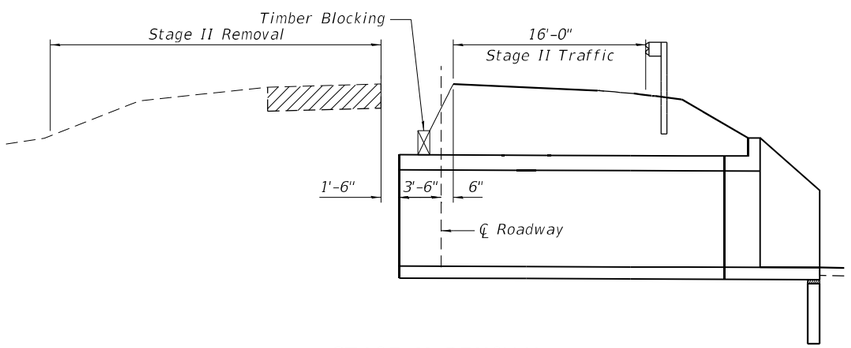

STAGE II REMOVAL

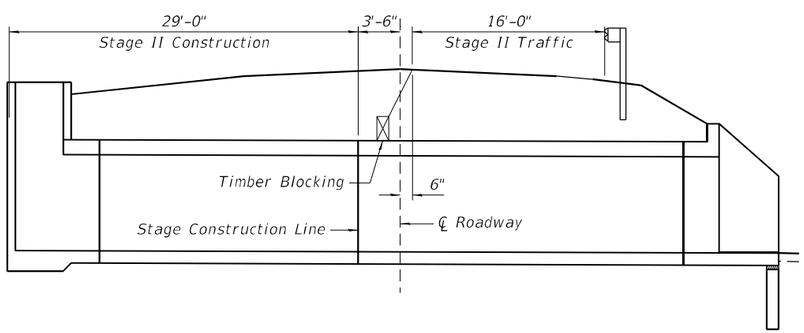

STAGE II CONSTRUCTION

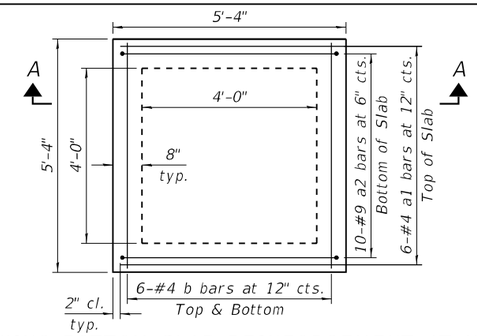

PLAN VIEW SHOWING BOTTOM SLAB REINFORCEMENT AT N. END SECTION

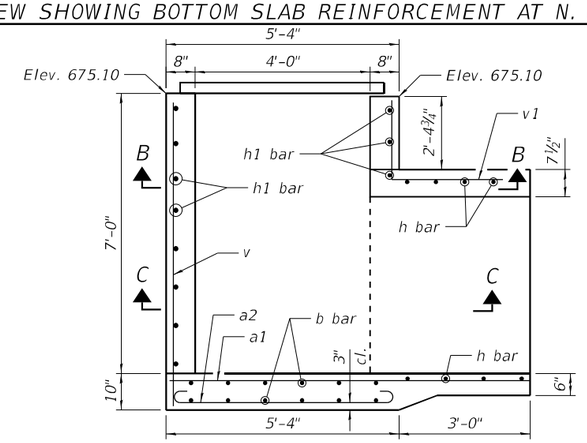

SECTION A-A

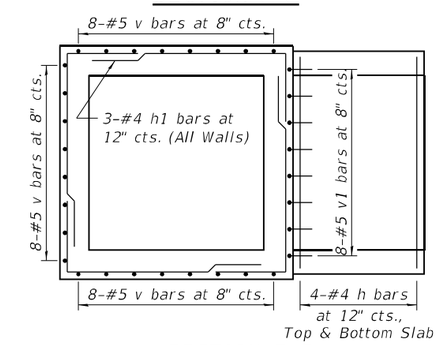

SECTION B-B

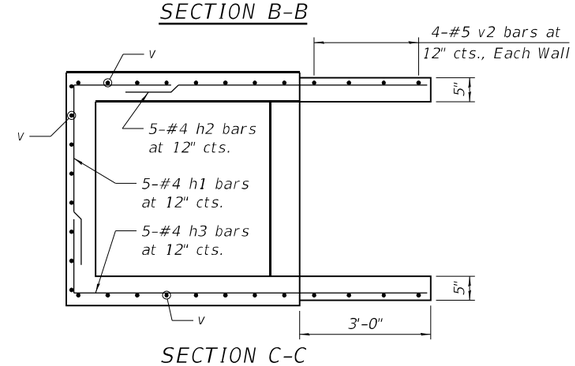

SECTION C-C

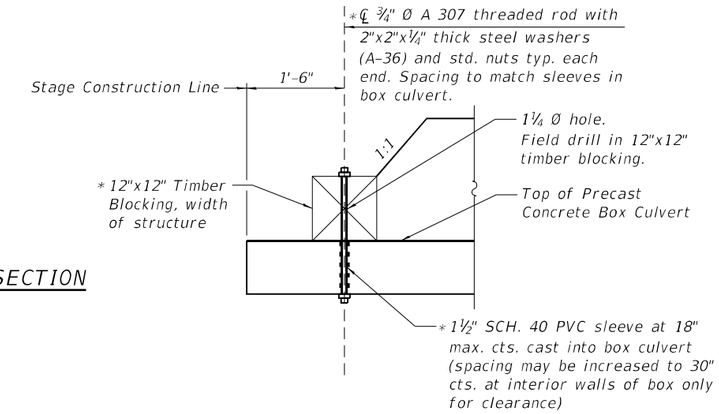

TIMBER BLOCKING DETAIL

*Cost included with Precast
Concrete Box Culverts 4'x4'

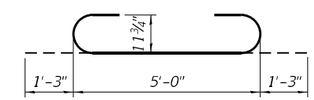

a2 BAR

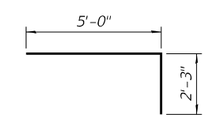

h1 BAR

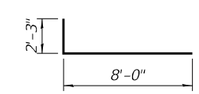

h3 BAR

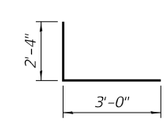

v1 BAR

BILL OF MATERIAL

Bar	No.	Size	Length	Shape
a1	6	#4	8'-0"	
a2	10	#9	7'-6"	
b	6	#4	5'-0"	
h	8	#4	4'-6"	
h1	17	#4	7'-3"	
h2	5	#4	8'-0"	
h3	5	#4	10'-3"	
v	24	#5	7'-3"	
v1	8	#5	5'-4"	
v2	8	#5	4'-10"	
Concrete Structures			Cu. Yd.	6.3
Reinforcement Bars			Pound	730

MODEL: Default
FILE NAME: E:\1902\Struct\Final Design\Design Plans\CADD_Sheets\0168349-D162H82-003-Stage Const Det.dgn

LIN ENGINEERING, LTD.
Consulting Engineers
Springfield, Illinois

USER NAME = Mike Haley	DESIGNED - AGJ	REVISED -	
	CHECKED - VPT	REVISED -	
PLOT TIME = 8:30:02 AM	DRAWN - AGJ	REVISED -	
PLOT DATE = 12/29/2022	CHECKED - VPT	REVISED -	

STATE OF ILLINOIS
DEPARTMENT OF TRANSPORTATION

MISCELLANEOUS DETAILS
STRUCTURE NO. 016-8349

SHEET 3 OF 6 SHEETS

F.A.U. RTE.	SECTION	COUNTY	TOTAL SHEETS	SHEET NO.
3578	2019-001-R	COOK	255	151

CONTRACT NO. 62H82
ILLINOIS FED. AID PROJECT

12/29/2022 8:30:02 AM

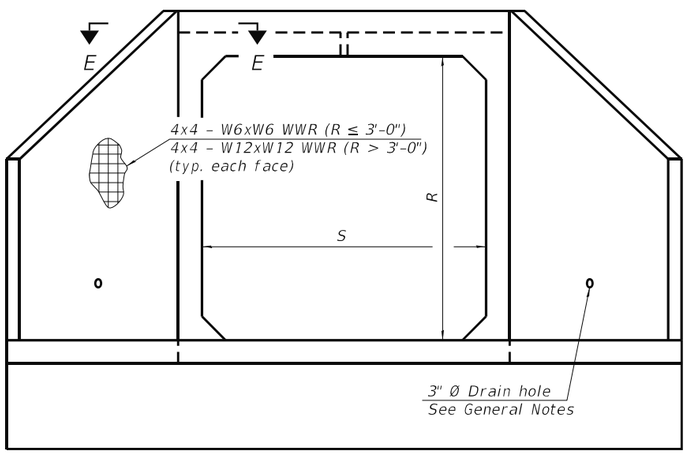

END VIEW

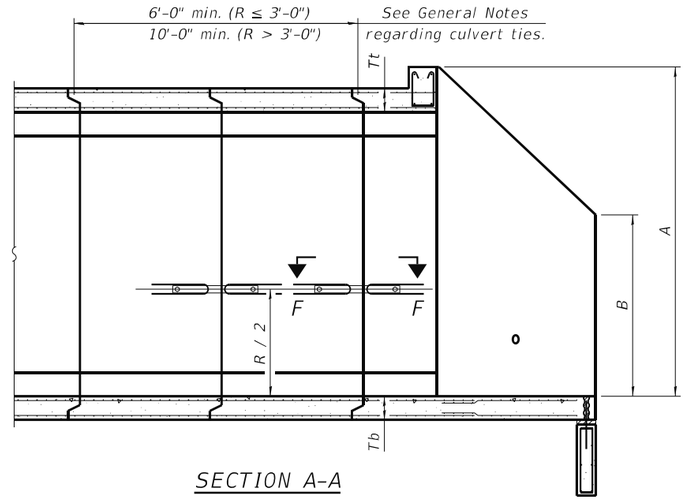

SECTION A-A

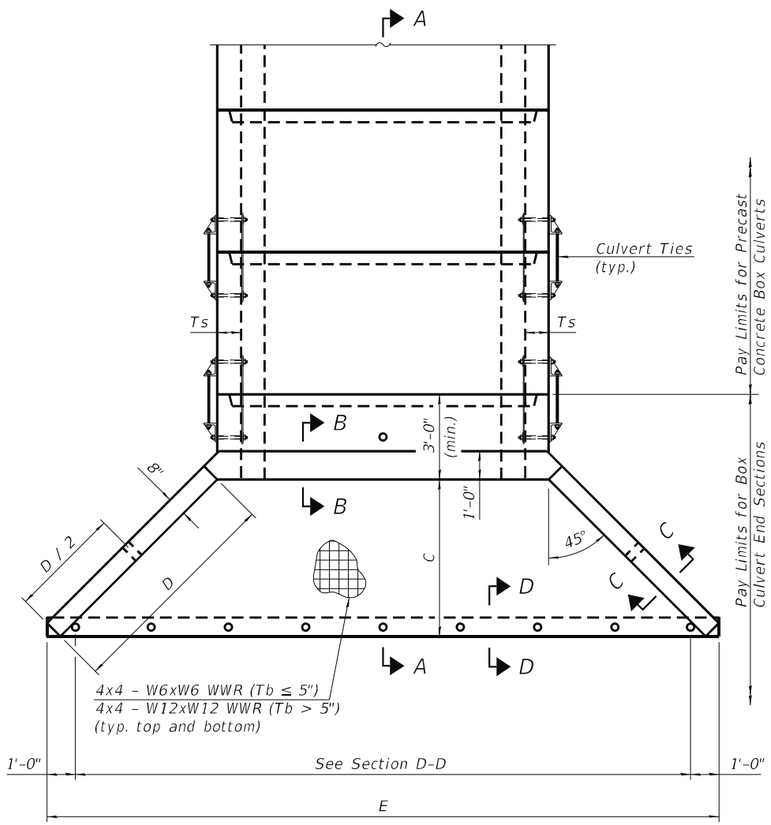

PLAN

GENERAL NOTES

Box Culvert End Sections shall be constructed according to the requirements of Section 540 of the Standard Specifications except as modified herein. End sections will be paid for at the contract unit price per each for Box Culvert End Sections.

The Contractor may furnish the end section as a single precast concrete piece or construct the end section in the field using cast-in-place (CIP) construction. For CIP construction, the bottom slab thickness shall be ncreased by 2" and the clear cover to the bottom mat of reinforcement shall be increased to 3".

Box section dimensions, materials, and reinforcement details for Box Culvert End Sections shall be according to the requirements for ASTM C 1577 as required for the design of the portion of the culvert within the limits of Precast Concrete Box Culverts except as modified herein.

The number of culvert ties shall be sufficient to engage the minimum length of culvert barrel shown within the pay limits for Precast Concrete Box Culverts and will be dependent upon the length of box culvert segments furnished by the Contractor. Culvert ties are not required for box culverts having a rise (R) less than or equal to 3 ft and a span (S) greater than or equal to 10 ft.

All costs associated with furnishing and installing or constructing the toewall and culvert ties will not be measured for payment but shall be included in the unit price for Box Culvert End Sections of the culvert number specified.

Shop drawings that detail slab thickness and reinforcement layout for the Box Culvert End Sections shall be provided to the Engineer for review and approval. Reinforcement bars not detailed herein shall be detailed with a clear distance at the end of the reinforcement not less than ½" nor more than 2". For the precast option, it shall be the Contractor's responsibility for determining a method of handling and a construction procedure shall be included on the shop drawings. The Contractor shall determine and detail in the shop drawings any necessary strengthening or stiffening provisions necessary to handle the precast segment. Any required modifications shall be at no extra charge.

The Contractor may use reinforcement bars in lieu of welded wire reinforcement (WWR). Reinforcement bars shall be limited to the sizes of #3 through #5 bars, a maximum spacing of the lesser of 8" or the member thickness, and shall result in an area of reinforcement equal to or greater than that provided by the WWR. Minimum lap lengths detailed herein are applicable to WWR and reinforcement bars.

Reinforcement (circumferential and longitudinal) in the culvert barrel portion of the end section being lapped with reinforcement from the wingwalls or bottom slab of the end section shall not be less than that required by ASTM C 1577 for the design fill height or the reinforcement detailed for the end section, whichever is greater.

One drain hole shall be provided in each wingwall for end sections of box culverts having an opening with a clear rise greater than 3 ft. The drain hole shall be located within the lower 1/3 of the clear rise of the box culvert and shall conform to the requirements of Article 503.11 of the Standard Specifications.

APRON END SECTION DIMENSIONS

Span (S)	Rise (R)	Tt	Tb	Ts	A	B	C	D	E	Concrete Cu. Yd.	Culvert Ties Required
3'-0"	2'-0"	7"	6"	4"	3'-4"	2'-2"	2'-10⅝"	4'-1"	10'-4⅝"	2.8	Yes
3'-0"	2'-0"	4"	4"	4"	3'-1"	2'-1"	2'-7⅞"	3'-9"	9'-11"	2.3	Yes
3'-0"	3'-0"	7"	6"	4"	4'-4"	2'-8"	3'-10⅝"	5'-6"	12-4⅝"	3.7	Yes
3'-0"	3'-0"	4"	4"	4"	4'-1"	2'-7"	3'-7⅞"	5'-2"	11'-11"	3.1	Yes
4'-0"	2'-0"	7.5"	6"	5"	3'-4½"	2'-2½"	2'-11⅜"	4'-2"	11'-8"	3.3	Yes
4'-0"	2'-0"	5"	5"	5"	3'-2"	2'-1"	2'-8½"	3'-10"	11'-2⅜"	2.8	Yes
4'-0"	3'-0"	7.5"	6"	5"	4'-4½"	2'-8½"	3'-11⅜"	5'-7"	13'-8⅛"	4.2	Yes
4'-0"	3'-0"	5"	5"	5"	4'-2"	2'-7"	3'-8½"	5'-3"	13'-2⅜"	3.7	Yes
4'-0"	4'-0"	7.5"	6"	5"	5'-4½"	3'-2½"	4'-11⅜"	7'-0"	15'-8⅛"	5.3	Yes
4'-0"	4'-0"	5"	5"	5"	5'-2"	3'-1"	4'-8⅝"	6'-8"	15'-2½"	4.7	Yes
5'-0"	2'-0"	8"	7"	6"	3'-5"	2'-3"	2'-11⅜"	4'-2"	12'-10"	3.9	Yes
5'-0"	2'-0"	6"	6"	6"	3'-3"	2'-2"	2'-10"	4'-0"	12'-7¼"	3.5	Yes
5'-0"	3'-0"	8"	7"	6"	4'-5"	2'-9"	3'-11⅜	5'-7"	14'-10⅛"	4.9	Yes
5'-0"	3'-0"	6"	6"	6"	4'-3"	2'-8"	3'-10"	5'-5"	14'-7¼"	4.5	Yes
5'-0"	4'-0"	8"	7"	6"	5'-5"	3'-3"	4'-11⅜"	7'-0"	16'-10⅛"	6.1	Yes
5'-0"	4'-0"	6"	6"	6"	5'-3"	3'-2"	4'-9¼"	6'-9"	16'-5⅞"	5.5	Yes
5'-0"	5'-0"	8"	7"	6"	6'-5"	3'-9"	5'-11⅜"	8'-5"	18'-10⅛"	7.4	Yes
5'-0"	5'-0"	6"	6"	6"	6'-3"	3'-8"	5'-9¼"	8'-2"	18'-5⅞"	6.8	Yes
6'-0"	2'-0"	8"	7"	7"	3'-5"	2'-3"	2'-11⅜"	4'-2"	14'-0"	4.3	Yes
6'-0"	2'-0"	7"	7"	7"	3'-4"	2'-2"	2'-10⅝"	4'-1"	13'-10⅝"	4.2	Yes
6'-0"	3'-0"	8"	7"	7"	4'-5"	2'-9"	3'-11⅜"	5'-7"	16'-0⅛"	5.4	Yes
6'-0"	3'-0"	7"	7"	7"	4'-4"	2'-8"	3'-10⅝"	5'-6"	15'-10⅝"	5.2	Yes
6'-0"	4'-0"	8"	7"	7"	5'-5"	3'-3"	4'-11⅜"	7'-0"	18'-0⅛"	6.5	Yes
6'-0"	4'-0"	7"	7"	7"	5'-4"	3'-2"	4'-10¾"	6'-11"	17'-10¾"	6.5	Yes
6'-0"	5'-0"	8"	7"	7"	6'-5"	3'-9"	5'-11⅜"	8'-5"	20'-0⅛"	8.0	Yes
6'-0"	5'-0"	7"	7"	7"	6'-4"	3'-8"	5'-10¾"	8'-4"	19'-10¾"	7.8	Yes
6'-0"	6'-0"	8"	7"	7"	7'-5"	4'-3"	6'-11½"	9'-10"	22'-0¼"	9.5	Yes
6'-0"	6'-0"	7"	7"	7"	7'-4"	4'-2"	6'-10¾"	9'-9"	21'-10¾"	9.3	Yes
7'-0"	2'-0"	8"	8"	8"	3'-5"	2'-3"	2'-11⅜"	4'-2"	15'-2"	4.9	Yes
7'-0"	3'-0"	8"	8"	8"	4'-5"	2'-9"	3'-11⅜"	5'-7"	17'-2⅛"	6.1	Yes
7'-0"	4'-0"	8"	8"	8"	5'-5"	3'-3"	4'-11⅜"	7'-0"	19'-2⅛"	7.4	Yes
7'-0"	5'-0"	8"	8"	8"	6'-5"	3'-9"	5'-11⅜"	8'-5"	21'-2⅛"	8.9	Yes
7'-0"	6'-0"	8"	8"	8"	7'-5"	4'-3"	6'-11½"	9'-10"	23'-2¼"	10.6	Yes
8'-0"	2'-0"	8"	8"	8"	3'-5"	2'-3"	2'-11⅜"	4'-2"	16'-2"	5.3	Yes
8'-0"	3'-0"	8"	8"	8"	4'-5"	2'-9"	3'-11⅜"	5'-7"	18'-2⅛"	6.5	Yes
8'-0"	4'-0"	8"	8"	8"	5'-5"	3'-3"	4'-11⅜"	7'-0"	20'-2⅛"	7.8	Yes
8'-0"	5'-0"	8"	8"	8"	6'-5"	3'-9"	5'-11⅜"	8'-5"	22'-2⅛"	9.3	Yes
8'-0"	6'-0"	8"	8"	8"	7'-5"	4'-3"	6'-11½"	9'-10"	24'-2¼"	11.0	Yes
9'-0"	2'-0"	9"	9"	9"	3'-6"	2'-3"	3'-0¾"	4'-4"	17'-6⅞"	6.2	Yes
9'-0"	3'-0"	9"	9"	9"	4'-6"	2'-9"	4'-0¾"	5'-9"	19'-6⅞"	7.5	Yes
9'-0"	4'-0"	9'	9"	9"	5'-6"	3'-3"	5'-0¾"	7'-2"	21'-6⅞"	9.0	Yes
9'-0"	5'-0"	9"	9"	9"	6'-6"	3'-9"	6'-0⅞"	8'-7"	23'-7"	10.6	Yes
9'-0"	6'-0"	9"	9"	9"	7'-6"	4'-3"	7'-0⅛"	9'-11"	25'-5⅝"	12.4	Yes
10'-0"	2'-0"	10"	10"	10"	3'-7"	2'-4"	3'-1½"	4'-5"	18'-10¼"	7.1	No
10'-0"	3'-0"	10"	10"	10"	4'-7"	2'-10"	4'-1½"	5'-10"	20'-10¼"	8.6	No
10'-0"	4'-0"	10"	10"	10"	5'-7"	3'-4"	5'-1½"	7'-3"	22'-10⅜"	10.2	Yes
10'-0"	5'-0"	10"	10"	10"	6'-7"	3'-10"	6'-1½"	8'-8"	24'-10⅜"	12.0	Yes
10'-0"	6'-0"	10"	10"	10"	7'-7"	4'-4"	7'-1½"	10'-1"	26'-10⅜"	13.9	Yes
11'-0"	2'-0"	11"	11"	11"	3'-8"	2'-4"	3'-2⅞"	4'-7"	20'-3⅛"	8.2	No
11'-0"	3'-0"	11"	11"	11"	4'-8"	2'-10"	4'-2⅞"	6'-0"	22'-3⅛"	9.8	No
11'-0"	4'-0"	11"	11"	11"	5'-8"	3'-4"	5'-2¼"	7'-4"	24'-1¾"	11.5	Yes
11'-0"	5'-0"	11"	11"	11"	6'-8"	3'-10"	6'-2¼"	8'-9"	26'-1¾"	13.3	Yes
11'-0"	6'-0"	11"	11"	11"	7'-8"	4'-4"	7'-2¼"	10'-2"	28'-1⅞"	15.5	Yes
12'-0"	2'-0"	12"	12"	12"	3'-9"	2'-5"	3'-3⅝"	4'-8"	21'-6½"	9.3	No
12'-0"	3'-0"	12"	12"	12"	4'-9"	2'-11"	4'-3⅝"	6'-1"	23'-6½"	11.1	No
12'-0"	4'-0"	12"	12"	12"	5'-9"	3'-5"	5'-3⅝"	7'-6"	25'-6⅝"	13.0	Yes
12'-0"	5'-0"	12"	12"	12"	6'-9"	3'-11"	6'-3⅝"	8'-11"	27'-6⅝"	14.1	Yes
12'-0"	6'-0"	12"	12"	12"	7'-9"	4'-5"	7'-3⅝"	10'-4"	29'-6⅝"	17.4	Yes

Note:
Two sets of apron end section dimensions are shown above for some box culvert sizes due to the top and bottom slabs having different thicknesses per ASTM C 1577 for design fill heights less than 2 ft.

(Sheet 1 of 2)

SCB-AES 2-17-2017

MODEL: Default
FILE NAME: E:\1902\Struct\Final Design\Design Plans\CADD_Sheets\0168349-D162H82-004-Apron End Sec Det.dgn

LIN ENGINEERING, LTD.
Consulting Engineers
Springfield, Illinois

USER NAME =	Mike Haley	DESIGNED -	AGJ	REVISED	-
		CHECKED -	VPT	REVISED	-
PLOT TIME =	1:35:35 PM	DRAWN -	AGJ	REVISED	-
PLOT DATE =	12/23/2022	CHECKED -	VPT	REVISED	-

STATE OF ILLINOIS
DEPARTMENT OF TRANSPORTATION

APRON END SECTION DETAILS
STRUCTURE NO. 016-8349

SHEET 4 OF 6 SHEETS

F.A.U. RTE.	SECTION	COUNTY	TOTAL SHEETS	SHEET NO.
3578	2019-001-R	COOK	255	152

CONTRACT NO. 62H82
ILLINOIS FED. AID PROJECT

12/23/2022 1:35:35 PM

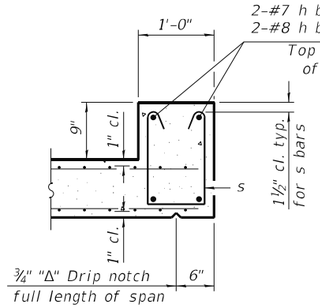

SECTION B-B
(Top slab at downstream end)

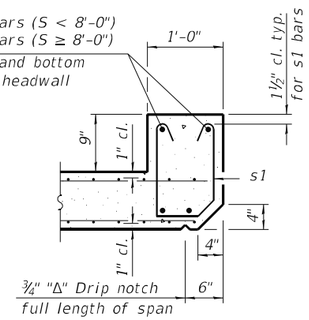

SECTION B-B
(Top slab at upstream end)

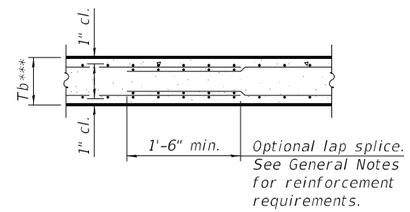

SECTION B-B
(Bottom Slab)

*** This dimension shall be increased by 2" for CIP construction.

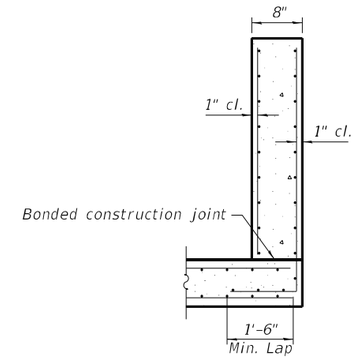

SECTION C-C

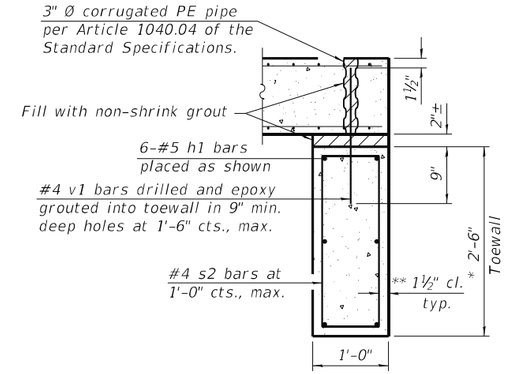

SECTION D-D

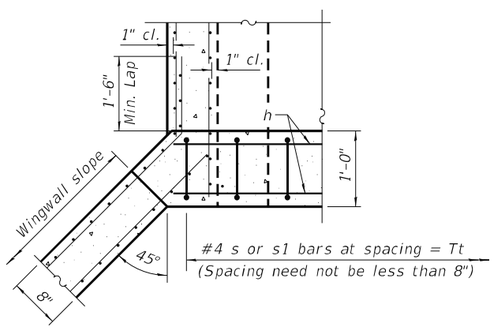

SECTION E-E

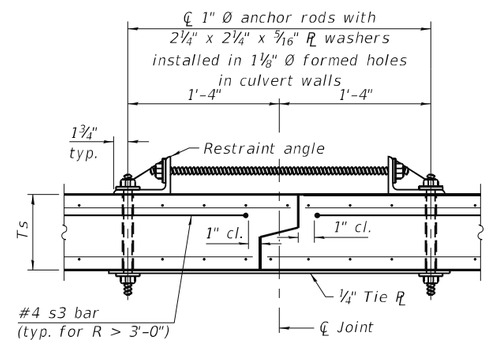

SECTION F-F
(Showing culvert tie details)

TOEWALL CONSTRUCTION SEQUENCE

1. Perform excavation and construct toewall.
2. Backfill accordingly and place bedding for precast box culvert end sections.
3. Set precast box culvert end section.
4. Drill and epoxy grout reinforcement in toewall in accordance with Section 584 of the Standard Specifications.
5. Pressure grout voids using non-shrink grout conforming to Section 1024 of the Standard Specifications.

* The Contractor may furnish a precast or cast-in-place toewall. The Contractor shall be responsible for the strength and stability of the precast toewall during handling. Additional lifting points may be required depending upon the length of the toewall or the Contractor may need to modify the design of the toewall for the proposed handling method.

** If soil conditions permit, the sides of the toewall may be poured directly against the soil. The clear cover on the sides of the toewall shall be increased to 3" by increasing the thickness of the toewall.

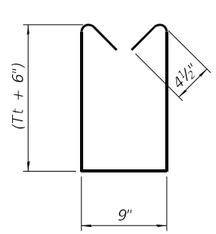

BAR s

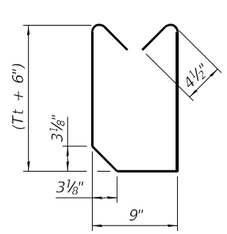

BAR s1

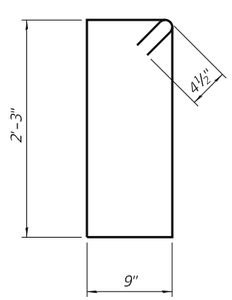

BAR s2

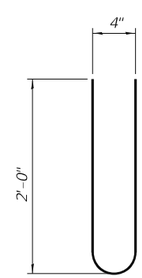

BAR s3

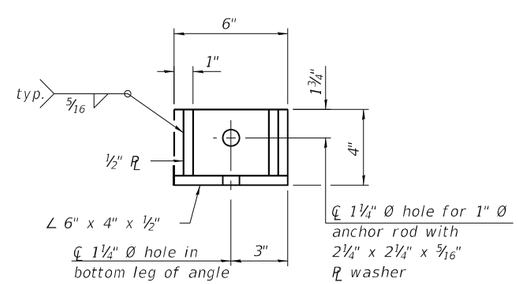

RESTRAINT ANGLE DETAIL

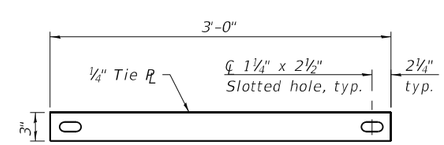

TIE PLATE DETAIL

Notes:
1" Ø anchor rods for the culvert ties shall conform to the requirements of ASTM F1554, Grade 105. Structural steel for the tie plate and restraint angle shall conform to the requirements of Article 1006.04 of the Standard Specifications. All components of the culvert tie detail shall be galvanized according to the requirements of AASHTO M 111 or M 232 as applicable. 2¼"x2¼"x5/16" plate washers shall be provided under each nut required for the anchor rods. Anchor rods connecting precast sections shall be brought to a snug tight condition followed by an additional ½ turn on one of the nuts for anchor rods installed in the walls. Match marks shall be provided on the bolt and nut to verify relative rotation between the bolt and the nut. Holes in the walls for the culvert tie assembly may be drilled using core bits in lieu of using formed holes.

SCB-AES 2-17-2017

(Sheet 2 of 2)

LIN ENGINEERING, LTD. Consulting Engineers Springfield, Illinois	USER NAME = Mike Haley	DESIGNED - AGJ	REVISED -	STATE OF ILLINOIS DEPARTMENT OF TRANSPORTATION	APRON END SECTION DETAILS STRUCTURE NO. 016-8349	F.A.U. RTE.	SECTION	COUNTY	TOTAL SHEETS / SHEET NO.
		CHECKED - VPT	REVISED -			3578	2019-001-R	COOK	255 / 153
	PLOT TIME = 1:35:36 PM	DRAWN - AGJ	REVISED -			CONTRACT NO. 62H82			
	PLOT DATE = 12/23/2022	CHECKED - VPT	REVISED -		SHEET 5 OF 6 SHEETS	ILLINOIS FED. AID PROJECT			

MODEL: Default
FILE NAME: E:\1902\Struct\Final Design\Design Plans\CADD_Sheets\0162H82-005-Apron End Sec Det.dgn
12/23/2022 1:35:36 PM

Wang Engineering
wangeng@wangeng.com
1145 N. Main Stree:
Lombard/IL/60148
Telephone: 6309539928
Fax: 6309539938

BORING LOG C-1

WEI Job No.: 411-05-03

Client: James J. Benes & Associates
Project: IL Route 7 from 131st Street to 135th Street
Location: Cook County, IL

Datum: NAVD 88
Elevation: 675.18 ft
North: 1812663.91 ft
East: 1116971.11 ft
Station: 88+98.55
Offset: 20.27' LT

Elevation (ft)	SOIL AND ROCK DESCRIPTION	Depth (ft)	Sample Type / Recovery	Sample No.	SPT Values (blw/6 in)	Qu (tsf)	Moisture Content (%)
674.9	4-inch thick, gray well-graded SANDY GRAVEL; damp to moist --FILL--						
	Very stiff, black, brown and gray SILTY CLAY; damp --FILL-- --RDR 2--			1	4 4 3	3.69 B	22
672.2	Medium stiff to stiff, brown and gray CLAY LOAM to SILTY CLAY LOAM, trace gravel; damp --FILL-- --RDR 2--	5		2	2 2 3	0.82 B	22
				3	3 3 3 3	1.56 B	23
667.2	Very stiff to hard, brown and gray SILTY CLAY, trace gravel; damp --RDR 2--	10		4	4 5 8	4.51 B	20
				5	5 7 10	3.77 B	19
662.2	Medium stiff, gray CLAY LOAM, trace gravel; moist --RDR 2--			6	3 4 5	0.75 P	18
660.2	Stiff to hard, gray SILTY CLAY; damp --RDR 2--	15		7	3 4 8	1.75 P	17
		20		8	3 6 8	5.82 B	14
		25		9	3 4 8	3.20 B	18
				10	2 4 7	3.36 B	17
				11	4 6 9	4.26 B	17
647.2	Gray fine SAND; saturated --RDR 2--						
645.9	Gray SILTY LOAM; few clay seams; saturated	30		12	4 4 6	NP	24
645.2	Boring terminated at 30.00 ft						
		35					
		40					

GENERAL NOTES

Begin Drilling: 02-01-2022 Complete Drilling: 02-01-2022
Drilling Contractor: Wang Testing Services Drill Rig: D25 ATV [93%]
Driller: A&T Logger: M. Sadowski Checked by: C. Marin
Drilling Method: 2.25" ID HSA; Boring backfilled upon completion

WATER LEVEL DATA

While Drilling: 28.00 ft
At Completion of Drilling: 23.00 ft
Time After Drilling: NA
Depth to Water: NA

The stratification lines represent the approximate boundary between soil types; the actual transition may be gradual.

The boring logs represent point information. Presentation of this information in no way implies that subsurface conditions are the same at locations other than the exact location of the boring.

WANGENGINC 411-05-03.GPJ WANGENG.GDT 4/8/22

MODEL: Default
FILE NAME: E:\1902\Struct\Final Design\Design Plans\CADD_Sheets\0168349-D162H82-006-Boring Logs.dgn

LIN ENGINEERING, LTD. Consulting Engineers Springfield, Illinois	USER NAME = Mike Haley	DESIGNED - AGJ	REVISED -
		CHECKED - VPT	REVISED -
	PLOT TIME = 1:35:36 PM	DRAWN - AGJ	REVISED -
	PLOT DATE = 12/23/2022	CHECKED - VPT	REVISED -

STATE OF ILLINOIS
DEPARTMENT OF TRANSPORTATION

SOIL BORING LOGS
STRUCTURE NO. 016–8349
SHEET 6 OF 6 SHEETS

F.A.U. RTE.	SECTION	COUNTY	TOTAL SHEETS	SHEET NO.
3578	2019-001-R	COOK	255	154
		CONTRACT NO. 62H82		
		ILLINOIS FED. AID PROJECT		

12/23/2022 1:35:36 PM

Bench Mark: BM #5: Cut " □ " in Top of Northwest corner of concrete traffic signal mast arm foundation located at southeast corner of IL Rte. 7 & 135th St., near Sta. 102+25 Rt. Elevation = 672.84 (NAVD88).

Existing Structure: The existing Reinforced Concrete Box Culvert was built at an unkown date. Existing structure is a 115'-0" long, 6' x 4' Box Culvert with cast-in-place concrete headwalls on both ends. Existing structure will be removed and replaced with a single barrel box culvert. 135th Street will be closed and traffic will be detoured during construction. No Salvage.

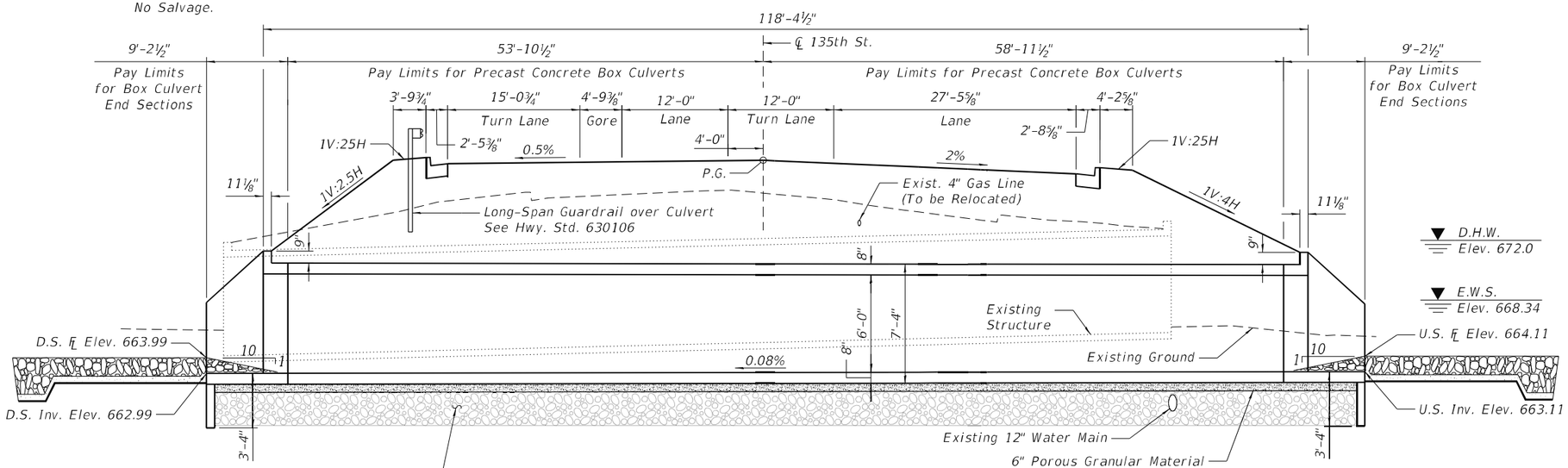

LONGITUDINAL SECTION

(All Dimensions at Rt. ∠'s to ℄ Roadway, U.N.O.)

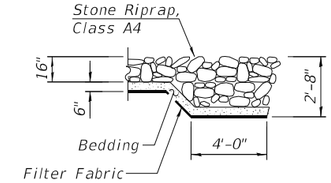

SECTION A-A

*2'-0" width of P.G.E. to be installed full length of proposed culvert, to 3'-0" from the end of the proposed wingwalls. Adjacent to culvert, vertical limits are from bottom of bottom slab to top of top slab. Along wingwalls, vertical limits are from bottom of culvert bottom slab to 1'-0" below top of wingwall. See Pay Limits for Porous Granular Embankment detail on sheet 2 of 7. P.G.E. behind wingwalls shall be capped with a 12" thick layer of impervious material. Cost of impervious material shall be included in the cost of Porous Granular Embankment.

DESIGN SPECIFICATIONS

2020 AASHTO LRFD Bridge Design Specifications, 9th Edition

LOADING HL-93

Allow 50#/sq. ft. for future wearing surface.

DESIGN STRESSES

PRECAST UNITS (New Construction)

f'c = 5,000 psi
fy = 65,000 psi (Welded Wire Reinforcement)

FIELD UNITS (New Construction)

f'c = 3,500 psi
fy = 60,000 psi (Reinforcement)

INDEX OF SHEETS

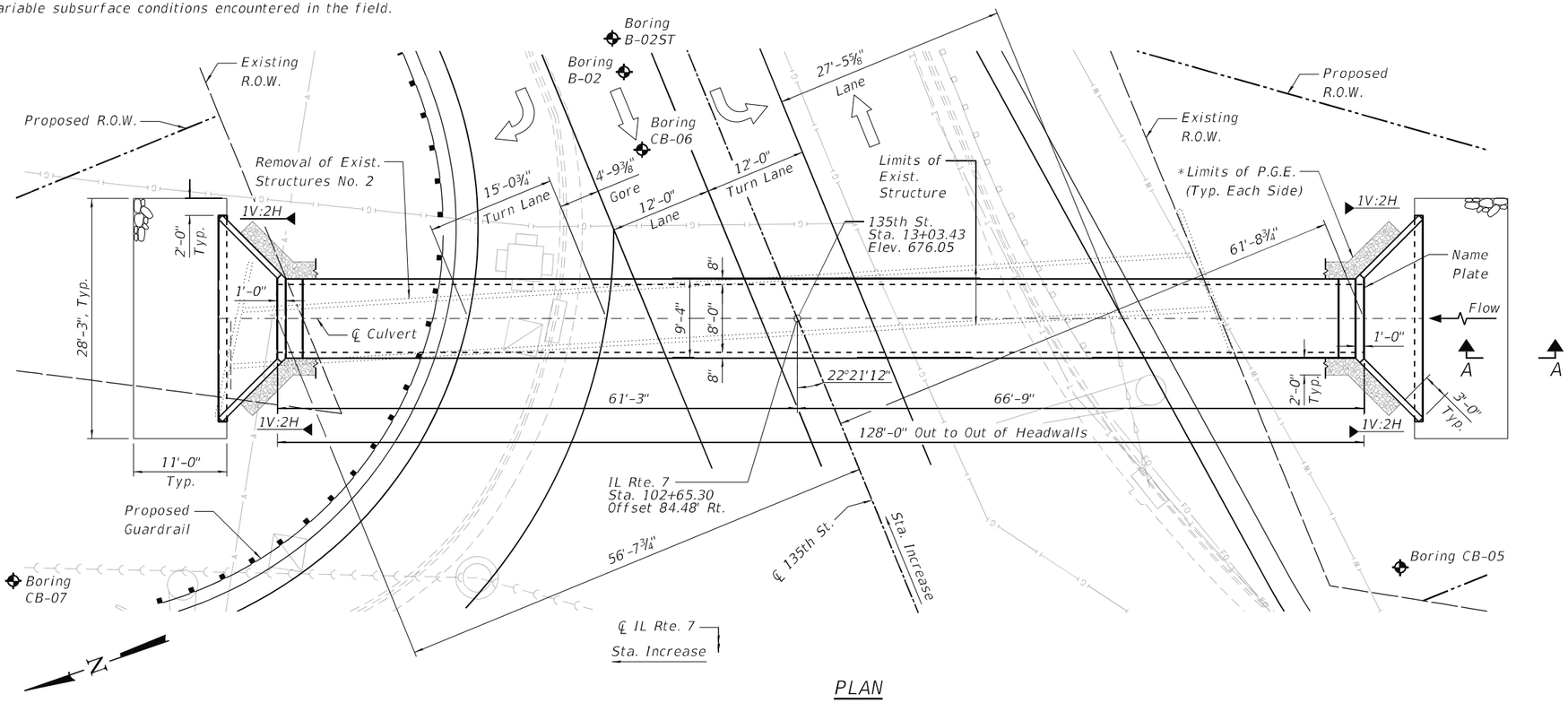

PLAN

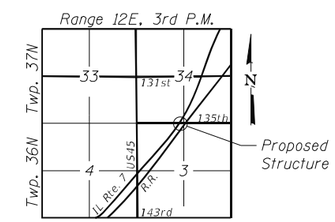

LOCATION SKETCH

GENERAL PLAN AND ELEVATION
135th STREET OVER MILL CREEK
F.A.U. RTE. 3578 SEC. 2019-001-R
COOK COUNTY
STATION 13+03.43
S.N. 016-3941

LIN ENGINEERING, LTD. Consulting Engineers Springfield, Illinois	USER NAME = LIN06-PC	DESIGNED - AGJ	REVISED -
		CHECKED - VPT	REVISED -
	PLOT TIME = 12:29:48 PM	DRAWN - AGJ	REVISED -
	PLOT DATE = 12/23/2022	CHECKED - VPT	REVISED -

STATE OF ILLINOIS
DEPARTMENT OF TRANSPORTATION

GENERAL PLAN AND ELEVATION
STRUCTURE NO. 016-3941

SHEET 1 OF 7 SHEETS

F.A.U. RTE.	SECTION	COUNTY	TOTAL SHEETS	SHEET NO.
3578	2019-001-R	COOK	255	155

CONTRACT NO. 62H82

ILLINOIS FED. AID PROJECT

MODEL: Default
FILE NAME: E:\1902\Struct\Final Design\Design Plans\CADD_Sheets\0163941-D162H82-001-GPE.dgn

12/23/2022 12:29:48 PM

STATION 13+03.43
BUILT 202_ BY
STATE OF ILLINOIS
F.A.U. RT. 3578 SEC. 2019-001-R
LOADING HL-93
STR. NO. 016-3941

NAME PLATE
See Std. 515001

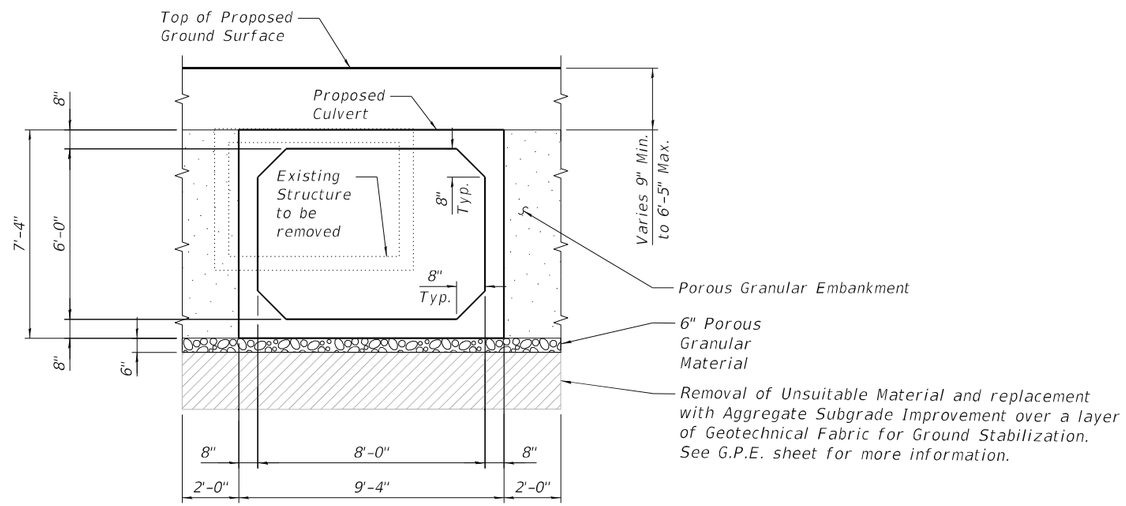

SECTION THRU PRECAST BOX CULVERT

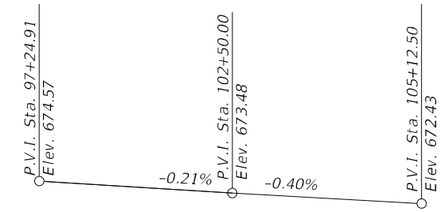

PROFILE GRADE
Along ℄ Proposed IL Rte. 7

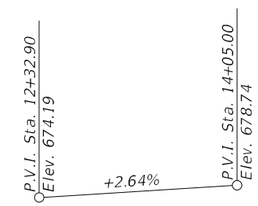

PROFILE GRADE
Along ℄ Proposed 135th Street

CULVERT CONSTRUCTION SEQUENCE

1. Close roadway to all traffic.
2. Divert water from construction area.
3. Perform removal of existing structure.
4. Perform construction of replacement structure.
5. Open roadway to traffic.
6. Remove water diversion measures.

GENERAL NOTES

The precast box culvert sections shall conform to the requirements of ASTM C 1577.

Drain holes shall be provided on exterior culvert walls for each precast box segment with a clear rise greater than 3 ft. The drain hole shall be located within 1/3 of the clear rise of the box culvert, shall not intercept the haunch, and shall conform to the requirements of Article 503.11 of the Standard Specifications.

Nonwoven geotextile fabric shall conform to the requirements of Art. 1080.01 of the Standard Specifications. The minimum weight of the fabric shall be 6 ounces per square yard, unless noted otherwise.

Precast concrete box culverts and box culvert end sections shall be backfilled with Porous Granular Embankment in the required excavation areas on the sides of the box culvert from the top of the box culvert to the bottom of the box culvert. This area of P.G.E. is included in the Porous Granular Embankment pay item. The 6-inch thick layer of porous granular material required under the precast concrete box culvert, according to Section 540.06 of the Standard Specifications, shall also apply to the end sections. Cost of this porous granular material will not be paid for separately but shall be included in the unit price of the work for which it is required.

Plan dimensions and details relative to existing plans are subject to nominal construction variations. The Contractor shall field verify existing dimensions and details affecting new construction and make necessary approved adjustments prior to construction or ordering of materials. Such variations shall not be cause for additional compensation for a change in scope of the work, however, the Contractor will be paid for the quantity actually furnished at the unit price bid for the work.

See Special Provisions and Roadway and Maintenance of Traffic plans for time restrictions relative to installation of the structure.

WATERWAY INFORMATION

Drainage Area = 4.13 sq. mi. Low Grade Elev. = 674.00 @ Sta. 13+00

Flood	Freq. Yr.	Q C.F.S.	Opening Sq. Ft. Exist.	Opening Sq. Ft. Prop.	Nat. H.W.E.	Head - Ft. Exist.	Head - Ft. Prop.	Headwater El. Exist.	Headwater El. Prop.
	10	70	24.0	36.8	670.8	1.0	0	671.8	668.6
Design	50	118	24.0	40.0	672.0	0.9	0	672.9	670.9
Base	100	139	24.0	40.0	672.5	1.0	0	673.5	672.0
Overtopping									
Max. Calc.	100	139	24.0	40.0	672.5	1.0	0	673.5	672.0

PRECAST BOX CULVERT SCHEDULE (ASTM C1577)

Station	Size (Span x Height)	Skew	Design Fill Min.	Design Fill Max.
13+03.43	8'-0" x 6'-0"	22°21'12"	5'-5"	6'-5"

The Design Fill heights shown in the culvert schedule are located between the curb and gutter flow lines.

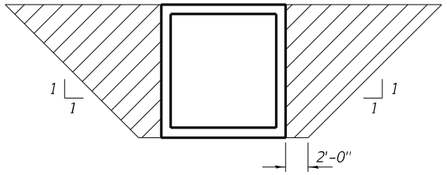

PAY LIMITS FOR POROUS GRANULAR EMBANKMENT
(Hatched area)

TOTAL BILL OF MATERIAL

ITEM	UNIT	TOTAL
Porous Granular Embankment	Cu. Yd.	397
Geotechnical Fabric for Ground Stabilization	Sq. Yd.	216
Stone Riprap, Class A4	Sq. Yd.	82
Filter Fabric	Sq. Yd.	64
Aggregate Subgrade Improvement	Cu. Yd.	144
Removal of Existing Structures No. 2	Each	1
Removal and Disposal of Unsuitable Material for Structures	Cu. Yd.	144
Name Plates	Each	1
Box Culvert End Sections, Culvert No. 2	Each	2
Precast Concrete Box Culverts 8'x6'	Foot	113

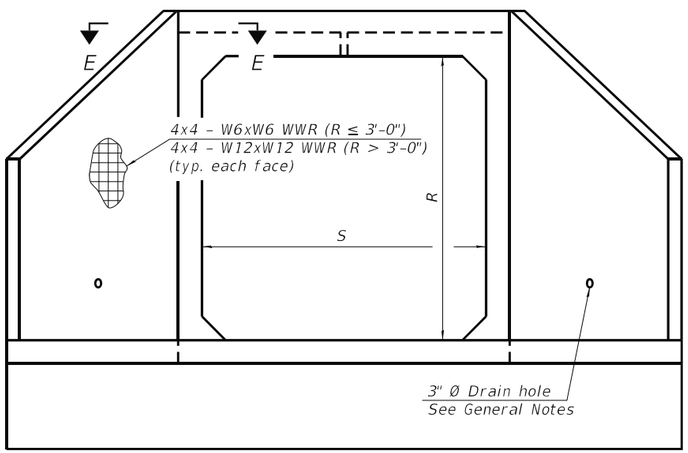

END VIEW

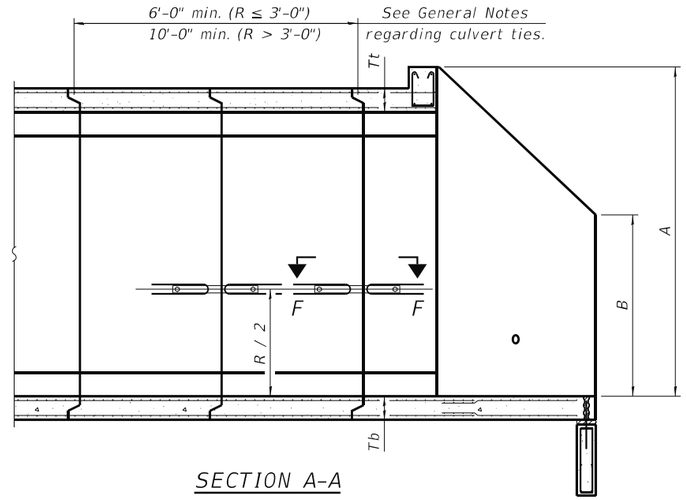

SECTION A-A

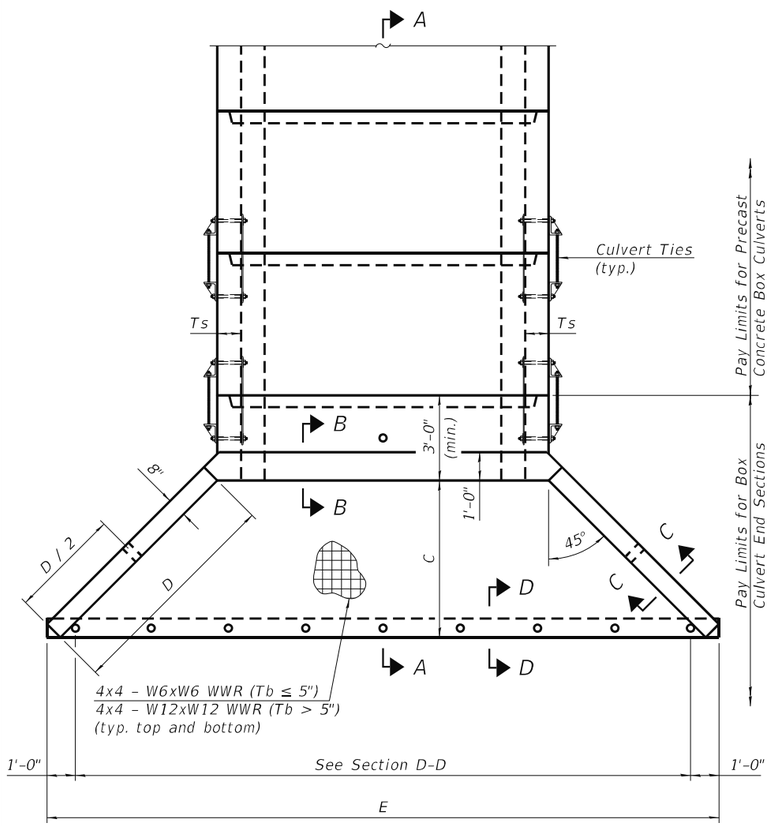

PLAN

GENERAL NOTES

Box Culvert End Sections shall be constructed according to the requirements of Section 540 of the Standard Specifications except as modified herein. End sections will be paid for at the contract unit price per each for Box Culvert End Sections.

The Contractor may furnish the end section as a single precast concrete piece or construct the end section in the field using cast-in-place (CIP) construction. For CIP construction, the bottom slab thickness shall be ncreased by 2" and the clear cover to the bottom mat of reinforcement shall be increased to 3".

Box section dimensions, materials, and reinforcement details for Box Culvert End Sections shall be according to the requirements for ASTM C 1577 as required for the design of the portion of the culvert within the limits of Precast Concrete Box Culverts except as modified herein.

The number of culvert ties shall be sufficient to engage the minimum length of culvert barrel shown within the pay limits for Precast Concrete Box Culverts and will be dependent upon the length of box culvert segments furnished by the Contractor. Culvert ties are not required for box culverts having a rise (R) less than or equal to 3 ft and a span (S) greater than or equal to 10 ft.

All costs associated with furnishing and installing or constructing the toewall and culvert ties will not be measured for payment but shall be included in the unit price for Box Culvert End Sections of the culvert number specified.

Shop drawings that detail slab thickness and reinforcement layout for the Box Culvert End Sections shall be provided to the Engineer for review and approval. Reinforcement bars not detailed herein shall be detailed with a clear distance at the end of the reinforcement not less than ½" nor more than 2". For the precast option, it shall be the Contractor's responsibility for determining a method of handling and a construction procedure shall be included on the shop drawings. The Contractor shall determine and detail in the shop drawings any necessary strengthening or stiffening provisions necessary to handle the precast segment. Any required modifications shall be at no extra charge.

The Contractor may use reinforcement bars in lieu of welded wire reinforcement (WWR). Reinforcement bars shall be limited to the sizes of #3 through #5 bars, a maximum spacing of the lesser of 8" or the member thickness, and shall result in an area of reinforcement equal to or greater than that provided by the WWR. Minimum lap lengths detailed herein are applicable to WWR and reinforcement bars.

Reinforcement (circumferential and longitudinal) in the culvert barrel portion of the end section being lapped with reinforcement from the wingwalls or bottom slab of the end section shall not be less than that required by ASTM C 1577 for the design fill height or the reinforcement detailed for the end section, whichever is greater.

One drain hole shall be provided in each wingwall for end sections of box culverts having an opening with a clear rise greater than 3 ft. The drain hole shall be located within the lower 1/3 of the clear rise of the box culvert and shall conform to the requirements of Article 503.11 of the Standard Specifications.

APRON END SECTION DIMENSIONS

Span (S)	Rise (R)	Tt	Tb	Ts	A	B	C	D	E	Concrete Cu. Yd.	Culvert Ties Required
3'-0"	2'-0"	7"	6"	4"	3'-4"	2'-2"	2'-10⅝"	4'-1"	10'-4⅝"	2.8	Yes
3'-0"	2'-0"	4"	4"	4"	3'-1"	2'-1"	2'-7⅞"	3'-9"	9'-11"	2.3	Yes
3'-0"	3'-0"	7"	6"	4"	4'-4"	2'-8"	3'-10⅝"	5'-6"	12-4⅝"	3.7	Yes
3'-0"	3'-0"	4"	4"	4"	4'-1"	2'-7"	3'-7⅞"	5'-2"	11'-11"	3.1	Yes
4'-0"	2'-0"	7.5"	6"	5"	3'-4½"	2'-2½"	2'-11⅜"	4'-2"	11'-8"	3.3	Yes
4'-0"	2'-0"	5"	5"	5"	3'-2"	2'-1"	2'-8½"	3'-10"	11'-2⅜"	2.8	Yes
4'-0"	3'-0"	7.5"	6"	5"	4'-4½"	2'-8½"	3'-11⅜"	5'-7"	13'-8⅛"	4.2	Yes
4'-0"	3'-0"	5"	5"	5"	4'-2"	2'-7"	3'-8½"	5'-3"	13'-2⅜"	3.7	Yes
4'-0"	4'-0"	7.5"	6"	5"	5'-4½"	3'-2½"	4'-11⅜"	7'-0"	15'-8⅛"	5.3	Yes
4'-0"	4'-0"	5"	5"	5"	5'-2"	3'-1"	4'-8⅝"	6'-8"	15'-2½"	4.7	Yes
5'-0"	2'-0"	8"	7"	6"	3'-5"	2'-3"	2'-11⅜"	4'-2"	12'-10"	3.9	Yes
5'-0"	2'-0"	6"	6"	6"	3'-3"	2'-2"	2'-10"	4'-0"	12'-7¼"	3.5	Yes
5'-0"	3'-0"	8"	7"	6"	4'-5"	2'-9"	3'-11⅜	5'-7"	14'-10⅛"	4.9	Yes
5'-0"	3'-0"	6"	6"	6"	4'-3"	2'-8"	3'-10"	5'-5"	14'-7¼"	4.5	Yes
5'-0"	4'-0"	8"	7"	6"	5'-5"	3'-3"	4'-11⅜"	7'-0"	16'-10⅛"	6.1	Yes
5'-0"	4'-0"	6"	6"	6"	5'-3"	3'-2"	4'-9¼"	6'-9"	16'-5⅞"	5.5	Yes
5'-0"	5'-0"	8"	7"	6"	6'-5"	3'-9"	5'-11⅜"	8'-5"	18'-10⅛"	7.4	Yes
5'-0"	5'-0"	6"	6"	6"	6'-3"	3'-8"	5'-9¼"	8'-2"	18'-5⅞"	6.8	Yes
6'-0"	2'-0"	8"	7"	7"	3'-5"	2'-3"	2'-11⅜"	4'-2"	14'-0"	4.3	Yes
6'-0"	2'-0"	7"	7"	7"	3'-4"	2'-2"	2'-10⅝"	4'-1"	13'-10⅝"	4.2	Yes
6'-0"	3'-0"	8"	7"	7"	4'-5"	2'-9"	3'-11⅜"	5'-7"	16'-0⅛"	5.4	Yes
6'-0"	3'-0"	7"	7"	7"	4'-4"	2'-8"	3'-10⅝"	5'-6"	15'-10⅝"	5.2	Yes
6'-0"	4'-0"	8"	7"	7"	5'-5"	3'-3"	4'-11⅜"	7'-0"	18'-0⅛"	6.5	Yes
6'-0"	4'-0"	7"	7"	7"	5'-4"	3'-2"	4'-10¾"	6'-11"	17'-10¾"	6.5	Yes
6'-0"	5'-0"	8"	7"	7"	6'-5"	3'-9"	5'-11⅜"	8'-5"	20'-0⅛"	8.0	Yes
6'-0"	5'-0"	7"	7"	7"	6'-4"	3'-8"	5'-10¾"	8'-4"	19'-10¾"	7.8	Yes
6'-0"	6'-0"	8"	7"	7"	7'-5"	4'-3"	6'-11½"	9'-10"	22'-0¼"	9.5	Yes
6'-0"	6'-0"	7"	7"	7"	7'-4"	4'-2"	6'-10¾"	9'-9"	21'-10¾"	9.3	Yes
7'-0"	2'-0"	8"	8"	8"	3'-5"	2'-3"	2'-11⅜"	4'-2"	15'-2"	4.9	Yes
7'-0"	3'-0"	8"	8"	8"	4'-5"	2'-9"	3'-11⅜"	5'-7"	17'-2⅛"	6.1	Yes
7'-0"	4'-0"	8"	8"	8"	5'-5"	3'-3"	4'-11⅜"	7'-0"	19'-2⅛"	7.4	Yes
7'-0"	5'-0"	8"	8"	8"	6'-5"	3'-9"	5'-11⅜"	8'-5"	21'-2⅛"	8.9	Yes
7'-0"	6'-0"	8"	8"	8"	7'-5"	4'-3"	6'-11½"	9'-10"	23'-2¼"	10.6	Yes
8'-0"	2'-0"	8"	8"	8"	3'-5"	2'-3"	2'-11⅜"	4'-2"	16'-2"	5.3	Yes
8'-0"	3'-0"	8"	8"	8"	4'-5"	2'-9"	3'-11⅜"	5'-7"	18'-2⅛"	6.5	Yes
8'-0"	4'-0"	8"	8"	8"	5'-5"	3'-3"	4'-11⅜"	7'-0"	20'-2⅛"	7.8	Yes
8'-0"	5'-0"	8"	8"	8"	6'-5"	3'-9"	5'-11⅜"	8'-5"	22'-2⅛"	9.3	Yes
8'-0"	6'-0"	8"	8"	8"	7'-5"	4'-3"	6'-11½"	9'-10"	24'-2¼"	11.0	Yes
9'-0"	2'-0"	9"	9"	9"	3'-6"	2'-3"	3'-0¾"	4'-4"	17'-6⅞"	6.2	Yes
9'-0"	3'-0"	9"	9"	9"	4'-6"	2'-9"	4'-0¾"	5'-9"	19'-6⅞"	7.5	Yes
9'-0"	4'-0"	9'	9"	9"	5'-6"	3'-3"	5'-0¾"	7'-2"	21'-6⅞"	9.0	Yes
9'-0"	5'-0"	9"	9"	9"	6'-6"	3'-9"	6'-0⅞"	8'-7"	23'-7"	10.6	Yes
9'-0"	6'-0"	9"	9"	9"	7'-6"	4'-3"	7'-0⅛"	9'-11"	25'-5⅝"	12.4	Yes
10'-0"	2'-0"	10"	10"	10"	3'-7"	2'-4"	3'-1½"	4'-5"	18'-10¼"	7.1	No
10'-0"	3'-0"	10"	10"	10"	4'-7"	2'-10"	4'-1½"	5'-10"	20'-10¼"	8.6	No
10'-0"	4'-0"	10"	10"	10"	5'-7"	3'-4"	5'-1½"	7'-3"	22'-10⅜"	10.2	Yes
10'-0"	5'-0"	10"	10"	10"	6'-7"	3'-10"	6'-1½"	8'-8"	24'-10⅜"	12.0	Yes
10'-0"	6'-0"	10"	10"	10"	7'-7"	4'-4"	7'-1½"	10'-1"	26'-10⅜"	13.9	Yes
11'-0"	2'-0"	11"	11"	11"	3'-8"	2'-4"	3'-2⅞"	4'-7"	20'-3⅛"	8.2	No
11'-0"	3'-0"	11"	11"	11"	4'-8"	2'-10"	4'-2⅞"	6'-0"	22'-3⅛"	9.8	No
11'-0"	4'-0"	11"	11"	11"	5'-8"	3'-4"	5'-2¼"	7'-4"	24'-1¾"	11.5	Yes
11'-0"	5'-0"	11"	11"	11"	6'-8"	3'-10"	6'-2¼"	8'-9"	26'-1¾"	13.3	Yes
11'-0"	6'-0"	11"	11"	11"	7'-8"	4'-4"	7'-2¼"	10'-2"	28'-1⅞"	15.5	Yes
12'-0"	2'-0"	12"	12"	12"	3'-9"	2'-5"	3'-3⅝"	4'-8"	21'-6½"	9.3	No
12'-0"	3'-0"	12"	12"	12"	4'-9"	2'-11"	4'-3⅝"	6'-1"	23'-6½"	11.1	No
12'-0"	4'-0"	12"	12"	12"	5'-9"	3'-5"	5'-3⅝"	7'-6"	25'-6⅝"	13.0	Yes
12'-0"	5'-0"	12"	12"	12"	6'-9"	3'-11"	6'-3⅝"	8'-11"	27'-6⅝"	14.1	Yes
12'-0"	6'-0"	12"	12"	12"	7'-9"	4'-5"	7'-3⅝"	10'-4"	29'-6⅝"	17.4	Yes

Note:
Two sets of apron end section dimensions are shown above for some box culvert sizes due to the top and bottom slabs having different thicknesses per ASTM C 1577 for design fill heights less than 2 ft.

(Sheet 1 of 2)

SCB-AES 2-17-2017

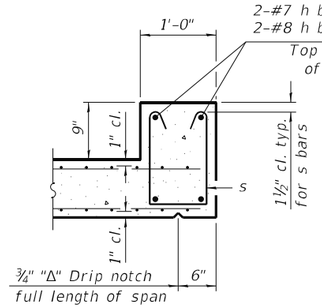

SECTION B-B
(Top slab at downstream end)

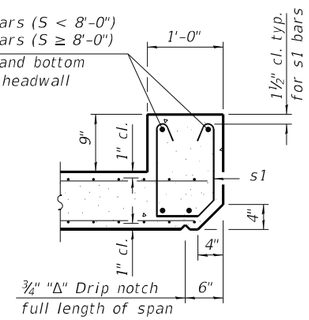

SECTION B-B
(Top slab at upstream end)

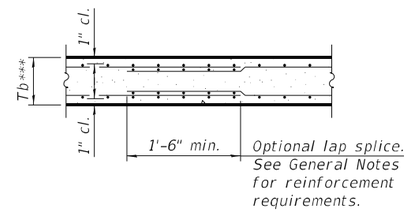

SECTION B-B
(Bottom Slab)

*** This dimension shall be increased by 2" for CIP construction.

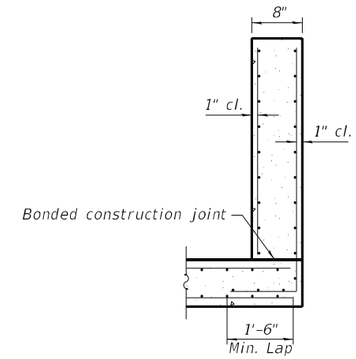

SECTION C-C

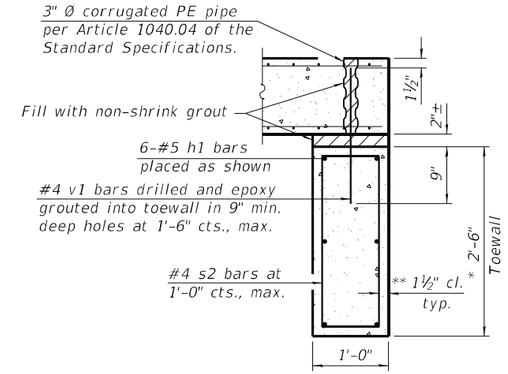

SECTION D-D

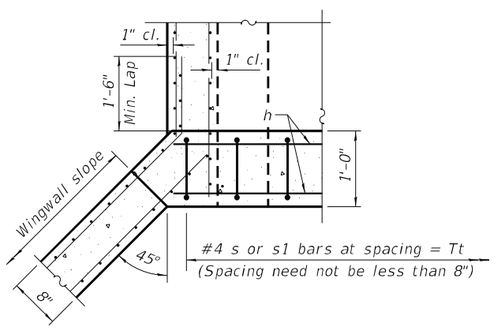

SECTION E-E

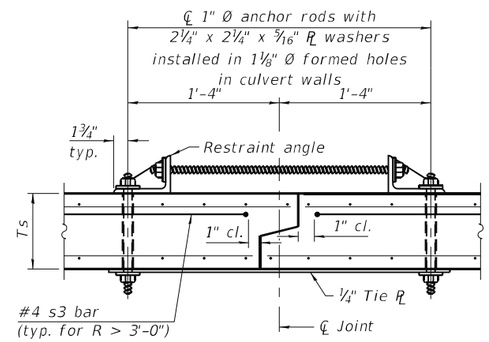

SECTION F-F
(Showing culvert tie details)

TOEWALL CONSTRUCTION SEQUENCE

1. Perform excavation and construct toewall.
2. Backfill accordingly and place bedding for precast box culvert end sections.
3. Set precast box culvert end section.
4. Drill and epoxy grout reinforcement in toewall in accordance with Section 584 of the Standard Specifications.
5. Pressure grout voids using non-shrink grout conforming to Section 1024 of the Standard Specifications.

* The Contractor may furnish a precast or cast-in-place toewall. The Contractor shall be responsible for the strength and stability of the precast toewall during handling. Additional lifting points may be required depending upon the length of the toewall or the Contractor may need to modify the design of the toewall for the proposed handling method.

** If soil conditions permit, the sides of the toewall may be poured directly against the soil. The clear cover on the sides of the toewall shall be increased to 3" by increasing the thickness of the toewall.

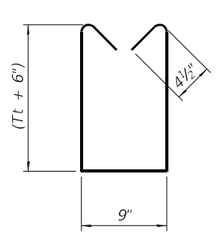

BAR s

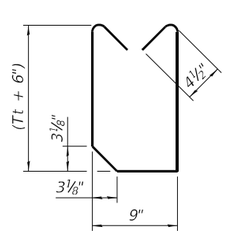

BAR s1

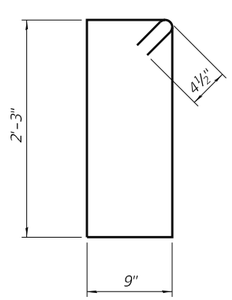

BAR s2

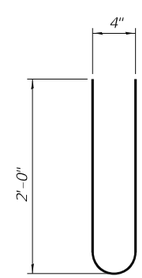

BAR s3

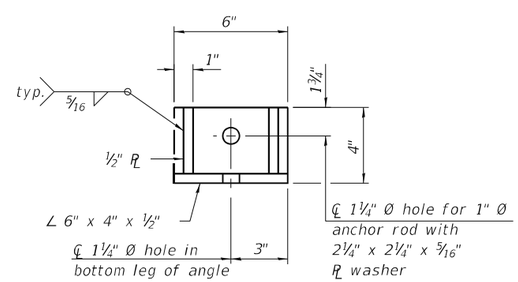

RESTRAINT ANGLE DETAIL

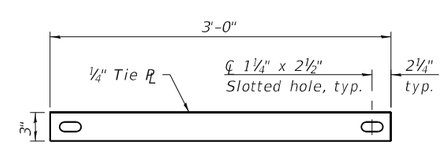

TIE PLATE DETAIL

Notes:
1" Ø anchor rods for the culvert ties shall conform to the requirements of ASTM F1554, Grade 105. Structural steel for the tie plate and restraint angle shall conform to the requirements of Article 1006.04 of the Standard Specifications. All components of the culvert tie detail shall be galvanized according to the requirements of AASHTO M 111 or M 232 as applicable. 2¼"x2¼"x5/16" plate washers shall be provided under each nut required for the anchor rods. Anchor rods connecting precast sections shall be brought to a snug tight condition followed by an additional ½ turn on one of the nuts for anchor rods installed in the walls. Match marks shall be provided on the bolt and nut to verify relative rotation between the bolt and the nut. Holes in the walls for the culvert tie assembly may be drilled using core bits in lieu of using formed holes.

SCB-AES 2-17-2017

(Sheet 2 of 2)

Wang Engineering
wangeng@wangeng.com
1145 N. Main Stree:
Lombard/IL/60148
Telephone: 6309539928
Fax: 6309539938

BORING LOG B-02

WEI Job No.: 411-05-02

Client: James J. Benes & Associates
Project: IL Route 7 from 131st Street to 135th Street
Location: Cook County, Illinois

Daum: NAVD 88
Elevation: 674.44 ft
North: 1813691.79 ft
East: 1117933.44 ft
Station: 102+88.18
Ofset: 107.22 RT

Depth (ft)	Elevation (ft)	SOIL AND ROCK DESCRIPTION	Sample Type	Sample No.	SPT Values (blw/6 in)	Qu (tsf)	Moisture Content (%)
	673.4	12-inch thick ASPHALT --PAVEMENT--					
	671.4	Medium dense, brown GRAVELLY LOAM; dry --FILL--		1	8 12 8	NP	5
5		Stiff to very stiff, brown, gray and black SILTY CLAY LOAM to SILTY CLAY, trace gravel; damp --FILL-- --RDR 2--		2	5 5 5	2.00 P	24
				3	4 5 5	1.89 B	21
10				4	3 4 5	1.39 B	28
	663.9	Soft to stiff, black to brown PEAT, some organic matter --RDR 1--		5	2 3 3	0.57 B	89
15				6	2 2 2	0.41 B	114
				7	0 1 3	0.82 B	99
20				8	2 2 2	1.07 B	94
	653.9	Very soft to medium stiff, black to gray SILTY CLAY, some organic matter --RDR 1--		9	0 0 0	0.18 B	59
25				10	0 1 1	0.49 B	61
				11	0 2 3	0.49 B	51
30				12	0 2 2	0.66 B	64
	643.9	Stiff to very stiff, gray SILTY CLAY to SILTY CLAY LOAM, trace gravel --RDR 2--		13	1 2 3	1.00 P	23
35				14	3 4 5	1.07 B	19
				15	4 5 6	2.30 B	19
40	634.4	Boring terminated at 40.00 ft		16	4 4 7	2.46 B	19

GENERAL NOTES

Begin Drilling: 03-05-2021 Complete Drilling: 03-05-2021
Drilling Contractor: Wang Testing Services Drill Rig: 20D50T [80%]
Driller: R&J Logger: F. Bozga Checked by: C. Marin
Drilling Method: 2.25" ID HSA; boring backfilled upon completion

WATER LEVEL DATA

While Drilling: DRY
At Completion of Drilling: DRY
Time After Drilling: NA
Depth to Water: NA

The stratification lines represent the approximate boundary between soil types; the actual transition may be gradual.

Wang Engineering
wangerg@wangeng.com
1145 N. Main Street
Lombard/IL/60148
Telephone: 6309539928
Fax: 6309539938

BORING LOG B-02ST

WEI Job No.: 411-05-02

Client: James J. Benes & Associates
Project: IL Route 7 from 131st Street to 135th Street
Location: Cook County, Illinois

Datum: NAVD 88
Elevation: 674.63 ft
North: 1813690.58 ft
East: 1117937.52 ft
Station: 102+89.01
Offset: 111.38 RT

Depth (ft)	Elevation (ft)	SOIL AND ROCK DESCRIPTION	Sample Type	Sample No.	SPT Values (blw/6 in)	Qu (tsf)	Moisture Content (%)
		--drilled without sampling to 12 ft--					
5							
10							
	662.6	Selby tube 1		1	PUSH	NR	
	660.6						
15							
		Shelby tube 2		2	PUSH	0.50 P	101
20							
	652.6	Shelby tube 3 --L_L(%)=79, P_L(%)=33-- --%Gravel=0.0-- --%Sand=8.9-- --%Silt=68.7-- --%Clay=22.4-- --%Organics= 9.9--		3	PUSH	0.50 P	79
25		Boring terminated at 22.00 ft					
30							
35							
40							

GENERAL NOTES

Begin Drilling: 03-05-2021 Complete Drilling: 03-05-2021
Drilling Contractor: Wang Testing Services Drill Rig: 20D50T [80%]
Driller: R&J Logger: F. Bozga Checked by: C. Marin
Drilling Method: 2.25" ID HSA; boring backfilled upon completion

WATER LEVEL DATA

While Drilling: DRY
At Completion of Drilling: DRY
Time After Drilling: NA
Depth to Water: NA

The stratification lines represent the approximate boundary between soil types; the actual transition may be gradual.

The boring logs represent point information. Presentation of this information in no way implies that subsurface conditions are the same at locations other than the exact location of the boring.

(Sheet 1 of 3)

LIN ENGINEERING, LTD.
Consulting Engineers
Springfield, Illinois

USER NAME = LIN06-PC	DESIGNED - AGJ	REVISED -	
	CHECKED - VPT	REVISED -	
PLOT TIME = 12:29:53 PM	DRAWN - AGJ	REVISED -	
PLOT DATE = 12/23/2022	CHECKED - VPT	REVISED -	

STATE OF ILLINOIS
DEPARTMENT OF TRANSPORTATION

SOIL BORING LOGS
STRUCTURE NO. 016-3941

SHEET 5 OF 7 SHEETS

F.A.U. RTE.	SECTION	COUNTY	TOTAL SHEETS	SHEET NO.
3578	2019-001-R	COOK	255	159

CONTRACT NO. 62H82

ILLINOIS FED. AID PROJECT

Wang Engineering
wangeng@wangeng.com
1145 N. Main Street
Lombard/IL/60148
Telephone: 6309539928
Fax: 6309539938

BORING LOG CB-05

WEI Job No.: 411-05-01

Client: James J. Benes & Associates
Project: IL Route 7 from 131st Street to 135th Street
Location: Cook County, IL

Daum: NAVD 88
Elevation: 672.71 ft
North: 1813620.62 ft
East: 1117842.08 ft
Station: 101+83.7
Offset: 62.9' RT

Elevation (ft)	SOIL AND ROCK DESCRIPTION	Depth (ft)	Sample Type / recovery	Sample No.	SPT Values (blw/6 in)	Qu (tsf)	Moisture Content (%)
672.1 / 671.8	7-inch thick, brown SILTY CLAY LOAM; damp --TOPSOIL--			1	2 19 7 6	2.50 P	14
	4-inch thick, black GRAVEL --FILL--						
	Very stiff to hard, brown SILTY CLAY, trace to little gravel; damp to moist --FILL-- --RDR 2--			2	4 5 4 5	4.25 P	20
		5		3	4 4 6 4	2.13 B	18
666.5	Medium stiff, black SILTY CLAY LOAM; moist to wet --BURIED TOPSOIL--			4	2 2 2 3	0.82 B	33
665.1	--RDR 2-- Very soft to medium stiff, brown to dark brown ORGANIC SILT; wet --RDR 2--	10		5	1 2 2 1	0.57 B	51
				6	1 1 2	0.16 B	48
		15		7	0 2 2	< 0.25 P	72
657.2	Very soft, gray CLAY to CLAY LOAM, trace organic matter; wet --RDR 2--						
655.6	Stiff to very stiff, gray to brownish gray to gray SILTY CLAY, trace gravel; damp to moist --RDR 2--			8	0 4 3	< 0.25 P	44
		20		9	2 3 4	1.15 B	21

Elevation (ft)	SOIL AND ROCK DESCRIPTION	Depth (ft)	Sample Type / recovery	Sample No.	SPT Values (blw/6 in)	Qu (tsf)	Moisture Content (%)
				10	2 3 6	2.21 B	18
				11	3 3 5	2.13 B	19
647.7	Boring terminated at 25.00 ft	25					
		30					
		35					
		40					

WANGENGINC 411-0501.GPJ WANGENG.GDT 8/19/20

GENERAL NOTES

Begin Drilling: 09-26-2019 Complete Drilling: 09-26-2019
Drilling Contractor: Wang Testing Services Drill Rig:
Driller: K&A Logger: E. Yim Checked by: C. Marin
Drilling Method: 2.25" HSA, boring backfilled upon completion

WATER LEVEL DATA

While Drilling: DRY
At Completion of Drilling: DRY
Time After Drilling: NA
Depth to Water: NA

The stratification lines represent the approximate boundary between soil types; the actual transition may be gradual.

Wang Engineering
wangerg@wangeng.com
1145 N. Main Street
Lombard/IL/60148
Telephone: 6309539928
Fax: 6309539938

BORING LOG CB-06

WEI Job No.: 411-05-01

Client: James J. Benes & Associates
Project: IL Route 7 from 131st Street to 135th Street
Location: Cook County, IL

Datum: NAVD 88
Elevation: 673.86 ft
North: 1813693.82 ft
East: 1117926.49 ft
Station: 102+86.8
Offset: 100.7' RT

Elevation (ft)	SOIL AND ROCK DESCRIPTION	Depth (ft)	Sample Type / recovery	Sample No.	SPT Values (blw/6 in)	Qu (tsf)	Moisture Content (%)
	11-inch thick, ASPHALT --PAVEMENT--						
672.9	Medium stiff to very stiff, brown, black and gray SILTY CLAY to SILTY CLAY LOAM, trace gravel; damp to moist --FILL-- --RDR 2--			1	5 5 7 6	3.12 B	19
670.4	Medium stiff to very stiff, gray CLAY to SILTY CLAY; damp to wet --RDR 2--	5		2	7 5 4 5	3.69 B	23
				3	3 2 3 5	0.90 B	27
				4	3 4 5 5	3.77 B	22
663.6		10		5	4 3 3 4	0.98 B	29
	Medium stiff, black CLAY LOAM, trace to some organic matter; moist --RDR 2-- --L_L(%)=47, P_L(%)=17-- --%Gravel=0.6-- --%Sand=37.7-- --%Silt=36.7-- --%Clay=25.1-- --A-7-6(16)--			6	3 2 2	0.82 B	56
		15		7	3 2 2	0.82 B	47
658.4	Very loose to loose, brown Organic SILT and PEAT; moist to wet --RDR 2--			8	2 2 2	0.90 B	105
		20		9	2 2 1	1.31 B	87

Elevation (ft)	SOIL AND ROCK DESCRIPTION	Depth (ft)	Sample Type / recovery	Sample No.	SPT Values (blw/6 in)	Qu (tsf)	Moisture Content (%)
653.4	Soft, black and gray SILTY CLAY, little to some organic matter; wet --laminated-- --RDR 2--			10	2 1 1	0.41 B	57
				11	0 2 2	0.25 B	57
648.9	Boring terminated at 25.00 ft	25					
		30					
		35					
		40					

WANGENGINC 411-0501.GPJ WANGENG.GDT 8/19/20

GENERAL NOTES

Begin Drilling: 09-26-2019 Complete Drilling: 09-26-2019
Drilling Contractor: Wang Testing Services Drill Rig:
Driller: K&A Logger: E. Yim Checked by: C. Marin
Drilling Method: 2.25" HSA, boring backfilled upon completion

WATER LEVEL DATA

While Drilling: DRY
At Completion of Drilling: DRY
Time After Drilling: NA
Depth to Water: NA

The stratification lines represent the approximate boundary between soil types; the actual transition may be gradual.

The boring logs represent point information. Presentation of this information in no way implies that subsurface conditions are the same at locations other than the exact location of the boring.

(Sheet 2 of 3)

MODEL: Default
FILE NAME: E:\1902\Struct\Final Design\Design Plans\CADD_Sheets\016394-D162H82-006-Boring Logs 2.dgn

LIN ENGINEERING, LTD.
Consulting Engineers
Springfield, Illinois

USER NAME = LIN06-PC	DESIGNED - AGJ	REVISED -	
	CHECKED - VPT	REVISED -	
PLOT TIME = 12:29:58 PM	DRAWN - AGJ	REVISED -	
PLOT DATE = 12/23/2022	CHECKED - VPT	REVISED -	

STATE OF ILLINOIS
DEPARTMENT OF TRANSPORTATION

SOIL BORING LOGS
STRUCTURE NO. 016-3941

SHEET 6 OF 7 SHEETS

F.A.U. RTE.	SECTION	COUNTY	TOTAL SHEETS	SHEET NO.
3578	2019-001-R	COOK	255	160

CONTRACT NO. 62H82
ILLINOIS FED. AID PROJECT

12/23/2022 12:29:58 PM

Wang Engineering
wangeng@wangeng.com
1145 N. Main Stree
Lombard/IL/60148
Telephone: 6309539928
Fax: 6309539938

BORING LOG CB-07

WEI Job No.: 411-05-01

Client: James J. Benes & Associates
Project: IL Route 7 from 131st Street to 135th Street
Location: Cook County, IL

Datum: NAVD 88
Elevation: 673.34 ft
North: 1813778.39 ft
East: 1117899.02 ft
Station: 103+47.2
Offset: 37.5' RT

Elevation (ft)	SOIL AND ROCK DESCRIPTION	Depth (ft)	Sample No.	SPT Values (blw/6 in)	Qu (tsf)	Moisture Content (%)
672.9	Brown LOAM, trace gravel; damp					
672.7	--FILL--					
	Gray SANDY GRAVEL; damp		1	4 5 3 5	2.25 P	23
	Stiff to very stiff, brown SILTY CLAY to SILTY CLAY LOAM, trace gravel; damp to moist					
	--FILL--					
	--RDR 2--		2	8 6 8 9	1.39 B	16
668.7						
	Stiff, black SILTY CLAY LOAM; moist	5	3	3 3 5 5	1.25 P	35
667.8	--BURIED TOPSOIL--					
	Stiff, gray and brown CLAY to SILTY CLAY; moist					
	--RDR 2--		4	2 3 4 4	1.58 B	23
664.8						
	Very stiff to hard, brown to brown and gray SILTY CLAY, trace gravel; damp to moist					
	--RDR 2--	10	5	3 4 8 7	6.48 B	18
661.5						
661.2	Brown SAND; saturated		6	3 3 5	2.05 B	20
	Gray SILT; saturated					
660.3						
	Medium stiff to very stiff, gray SILTY CLAY LOAM, trace gravel; moist					
	--RDR 2--	15	7	2 3 4	0.98 B	15
			8	2 4 5	2.05 B	15
655.3						
	Very stiff, gray CLAY to SILTY CLAY, trace gravel; moist					
	--RDR 2--	20	9	5 4 6	2.87 B	20
652.8						
	Very stiff, gray SILTY CLAY LOAM to SILTY LOAM, trace gravel; moist					
	--RDR 2--		10	2 6 8	3.03 B	12
			11	4 4 6	2.21 B	11
648.3		25				
	Boring terminated at 25.00 ft					
		30				
		35				
		40				

GENERAL NOTES

Begin Drilling: 09-25-2019 Complete Drilling: 09-25-2019
Drilling Contractor: Wang Testing Services Drill Rig:
Driller: KS&AG Logger: E. Yim Checked by: C. Marin
Drilling Method: 2.25" HSA, boring backfilled upon completion

WATER LEVEL DATA

While Drilling: 11.80 ft
At Completion of Drilling: DRY
Time After Drilling: NA
Depth to Water: NA

The stratification lines represent the approximate boundary between soil types; the actual transition may be gradual.

The boring logs represent point information. Presentation of this information in no way implies that subsurface conditions are the same at locations other than the exact location of the boring.

(Sheet 3 of 3)

WANGENGINC 411050LGPJ WANGENG.GDT 8/19/20

MODEL: Default
FILE NAME: E:\1902\Struct\Final Design\Design Plans\CADD_Sheets\0163941-D162H82-007-Boring Logs 3.dgn

12/23/2022 12:30:04 PM

LIN ENGINEERING, LTD. Consulting Engineers Springfield, Illinois	USER NAME = LIN06-PC	DESIGNED - AGJ	REVISED -
		CHECKED - VPT	REVISED -
	PLOT TIME = 12:30:04 PM	DRAWN - AGJ	REVISED -
	PLOT DATE = 12/23/2022	CHECKED - VPT	REVISED -

STATE OF ILLINOIS
DEPARTMENT OF TRANSPORTATION

SOIL BORING LOGS
STRUCTURE NO. 016-3941
SHEET 7 OF 7 SHEETS

F.A.U. RTE.	SECTION	COUNTY	TOTAL SHEETS	SHEET NO.
3578	2019-001-R	COOK	255	161

CONTRACT NO. 62H82
ILLINOIS FED. AID PROJECT

Bench Mark: BM #6: Cut " □ " in East end of headwall of concrete structure north of commercial entrance located along IL Rte. 7, near Sta. 110+34 Rt. Elevation = 690.28 (NAVD88).

Existing Structure: The existing Reinforced Concrete Pipe (RCP) was built at an unkown date. Existing structure is a 116' long, 4' diameter RCP with cast-in-place concrete headwalls on both ends. Existing structure will be abandoned and filled, and replaced with a single barrel box culvert. Stage construction will be utilized to maintain one driveway open to traffic during construction. Precast alternate is not allowed. No Salvage.

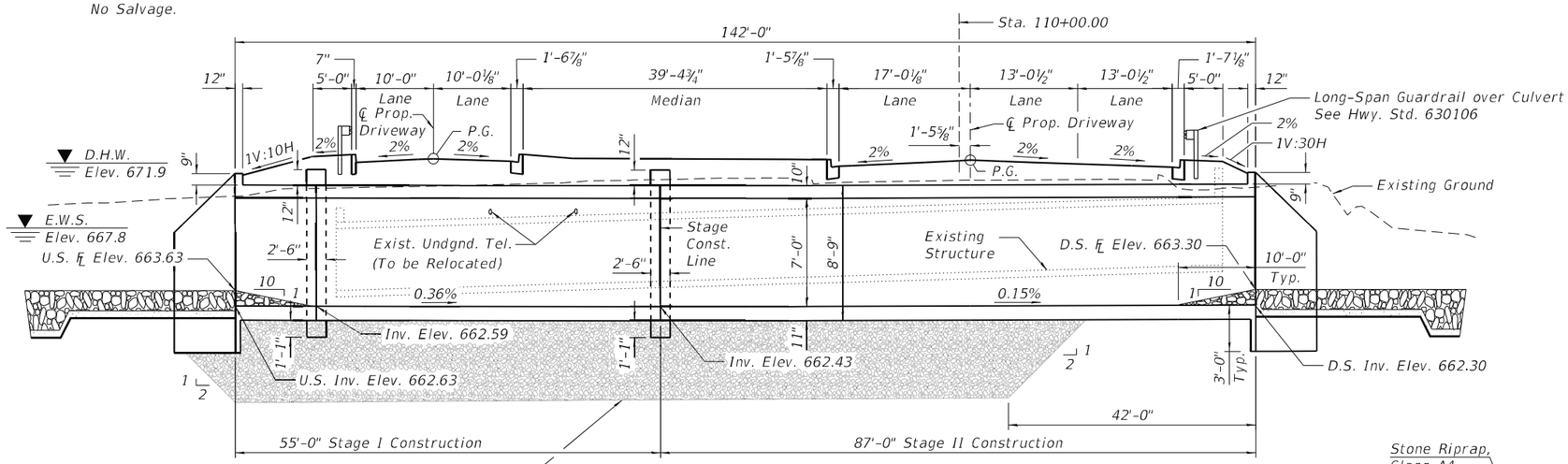

Removal of Unsuitable Material to Elev. 656.4 and replacement with Aggregate Subgrade Improvement over a layer of Geotechnical Fabric for Ground Stabilization 2'-0" Beyond Each Side, Typ. The limits and quantities of removal and replacement shown are based on the boring data and may be modified by the District Geotechnical and Field Engineers for variable subsurface conditions encountered in the field.

LONGITUDINAL SECTION

(Dimensions along ℄ Culvert)

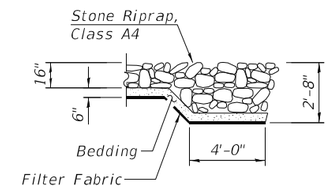

SECTION A-A

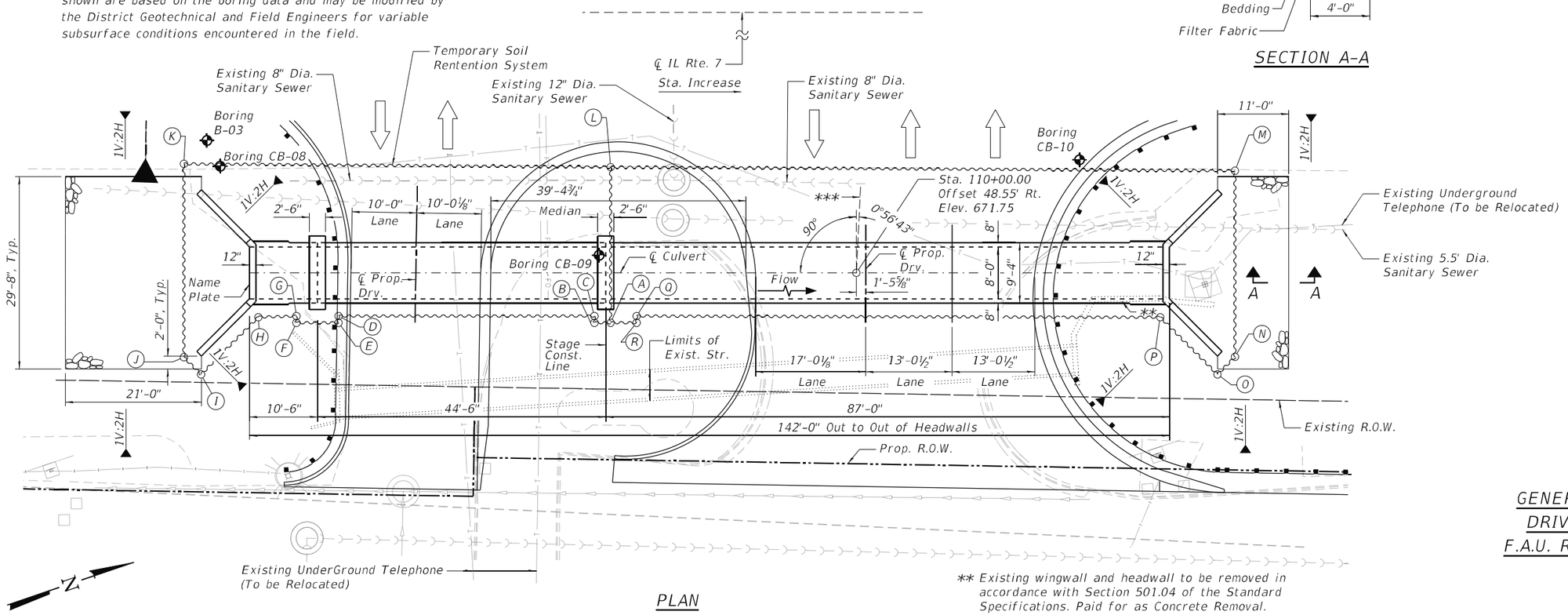

PLAN

** Existing wingwall and headwall to be removed in accordance with Section 501.04 of the Standard Specifications. Paid for as Concrete Removal.

*** Perpendicular to ℄ IL Rte. 7.

INDEX OF SHEETS

DESIGN SPECIFICATIONS

2020 AASHTO LRFD Bridge Design Specifications, 9th Edition

LOADING HL-93

Allow 50#/sq. ft. for future wearing surface.

DESIGN STRESSES

FIELD UNITS (New Construction)

f'c = 3,500 psi

fy = 60,000 psi (Reinforcement)

TEMPORARY SOIL RETENTION SYSTEM POINT LOCATIONS

Point	IL Rte. 7 Station	IL Rte. 7 Offset
A	109+62.20	56.88' Rt.
B	109+59.71	56.92' Rt.
C	109+59.69	55.88' Rt.
D	109+20.19	56.53' Rt.
E	109+20.21	57.58' Rt.
F	109+13.65	57.68' Rt.
G	109+13.64	56.64' Rt.
H	109+07.80	56.91' Rt.
I	108+99.11	65.89' Rt.
J	108+96.42	63.28' Rt.
K	108+95.93	33.45' Rt.
L	109+61.81	32.87' Rt.
M	110+58.19	31.84' Rt.
N	110+58.66	60.54' Rt.
O	110+56.00	63.30' Rt.
P	110+47.02	54.61' Rt.
Q	109+66.19	55.78' Rt.
R	109+66.21	56.82' Rt.

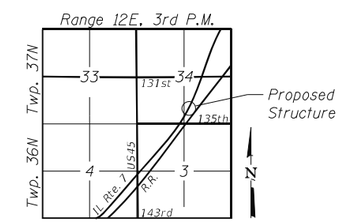

LOCATION SKETCH

GENERAL PLAN AND ELEVATION
DRIVEWAY OVER MILL CREEK
F.A.U. RTE. 3578 SEC. 2019-001-R
COOK COUNTY
STATION 110+00.00
S.N. 016-8351

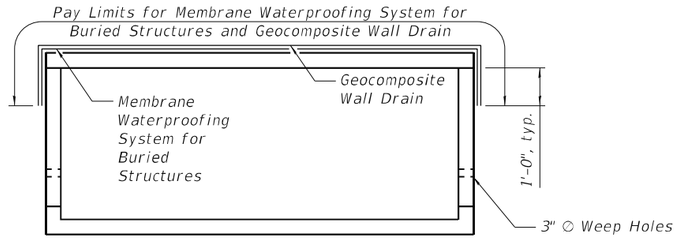

LIMITS OF MEMBRANE WATERPROOFING

Longitudinal limits of membrane waterproofing for the cast-in-place concrete culvert are along the full length between the headwalls, with gaps at concrete collars.

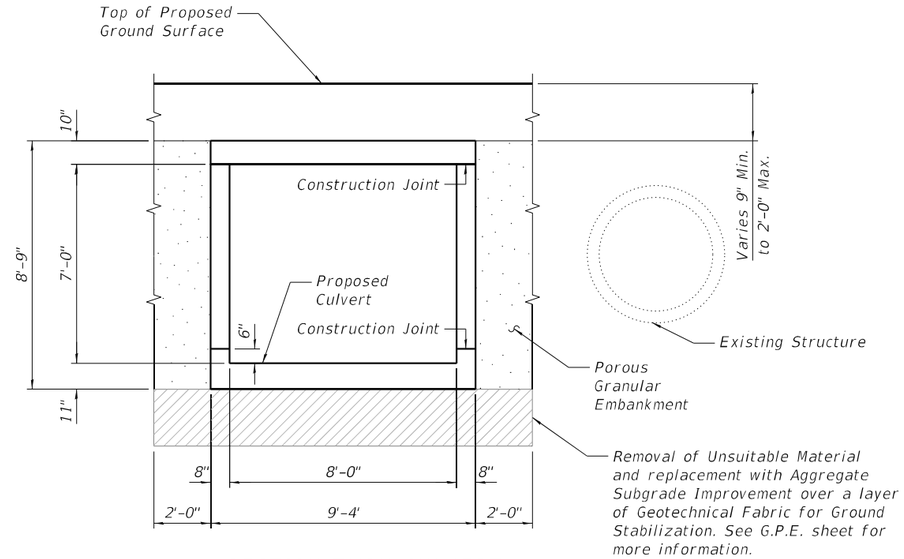

SECTION THRU CULVERT

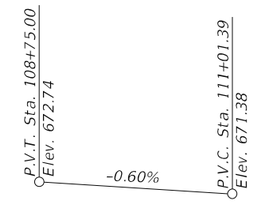

PROFILE GRADE

Along ℄ Proposed IL Rte. 7

STATION 110+00.00
BUILT 202_ BY
STATE OF ILLINOIS
F.A.U. RT. 3578 SEC. 2019-001-R
LOADING HL-93
STR. NO. 016-8351

NAME PLATE

See Std. 515001

WATERWAY INFORMATION

Drainage Area = 5.92 sq. mi. Low Grade Elev. = 672.48 @ Sta. 109+18

Flood	Freq. Yr.	Q C.F.S.	Opening Sq. Ft. Exist.	Opening Sq. Ft. Prop.	Nat. H.W.E.	Head - Ft. Exist.	Head - Ft. Prop.	Headwater El. Exist.	Headwater El. Prop.
	10	154	12.6	37.9	670.6	1.0	0	671.6	668.2
Design	50	326	12.6	48.0	671.9	0.7	0	672.6	670.3
Base	100	384	12.6	48.0	672.4	0.7	0	673.1	671.3
Overtopping									
Max. Calc.	100	384	12.6	48.0	672.4	0.7	0	673.1	671.3

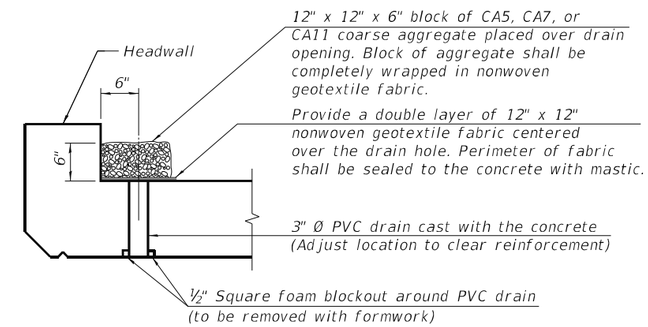

DRAIN DETAIL

(All costs associated with furnishing and constructing the above drain detail will not be measured for payment but shall be included in the contract unit price for the associated work.)

GENERAL NOTES

Nonwoven geotextile fabric shall conform to the requirements of Art. 1080.01 of the Standard Specifications. The minimum weight of the fabric shall be 6 ounces per square yard, unless noted otherwise.

Plan dimensions and details relative to existing plans are subject to nominal construction variations. The Contractor shall field verify existing dimensions and details affecting new construction and make necessary approved adjustments prior to construction or ordering of materials. Such variations shall not be cause for additional compensation for a change in scope of the work, however, the Contractor will be paid for the quantity actually furnished at the unit price bid for the work.

See Special Provisions and Roadway and Maintenance of Traffic plans for time restrictions relative to installation of the structure.

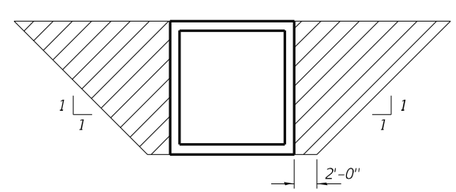

*PAY LIMITS FOR POROUS GRANULAR EMBANKMENT

(Hatched area)

* At some locations the pay limits for P.G.E. may be truncated due to placement of the Temporary Soil Rentention System within the hatched area illustrated above.

TOTAL BILL OF MATERIAL

ITEM	UNIT	TOTAL
Porous Granular Embankment	Cu. Yd.	641
Geotechnical Fabric For Ground Stabilization	Sq. Yd.	179
Stone Riprap, Class A4	Sq. Yd.	152
Filter Fabric	Sq. Yd.	134
Aggregate Subgrade Improvement	Cu. Yd.	306
Removal of Existing Structures No. 3	EACH	1
Removal and Disposal of Unsuitable Material for Structures	Cu. Yd.	306
Name Plates	Each	1
Concrete Box Culverts	Cu. Yd.	162.1
Reinforcement Bars	Pound	33,380
Geocomposite Wall Drain	Sq. Yd.	203
Membrane Waterproofing System for Buried Structures	Sq. Yd.	203
Filling Existing Culverts	Cu. Yd.	54
Temporary Soil Retention System	Sq. Yd.	4,285

* 2'-0" width of P.G.E. to be installed full length of proposed culvert, to 3'-0" from the end of the proposed wingwalls. Adjacent to culvert, vertical limits are from bottom of bottom slab to top of top slab. Along wingwalls, vertical limits are from bottom of culvert bottom slab to 1'-0" below top of wingwall. P.G.E. behind wingwalls shall be capped with a 12" thick layer of impervious material. Cost of impervious material shall be included in the cost of Porous Granular Embankment.

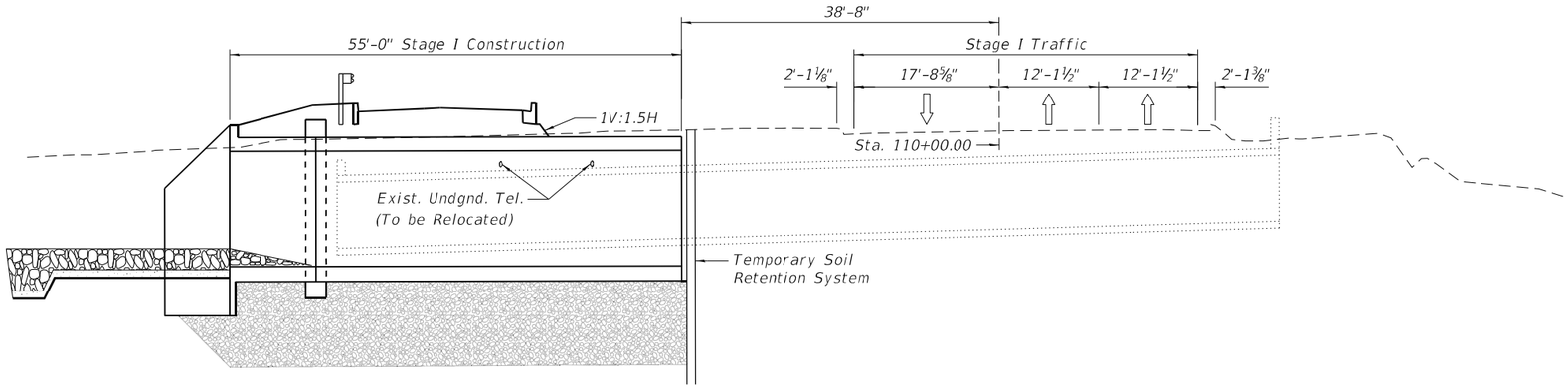

STAGE I CONSTRUCTION

(Dimensions along ℄ Culvert)

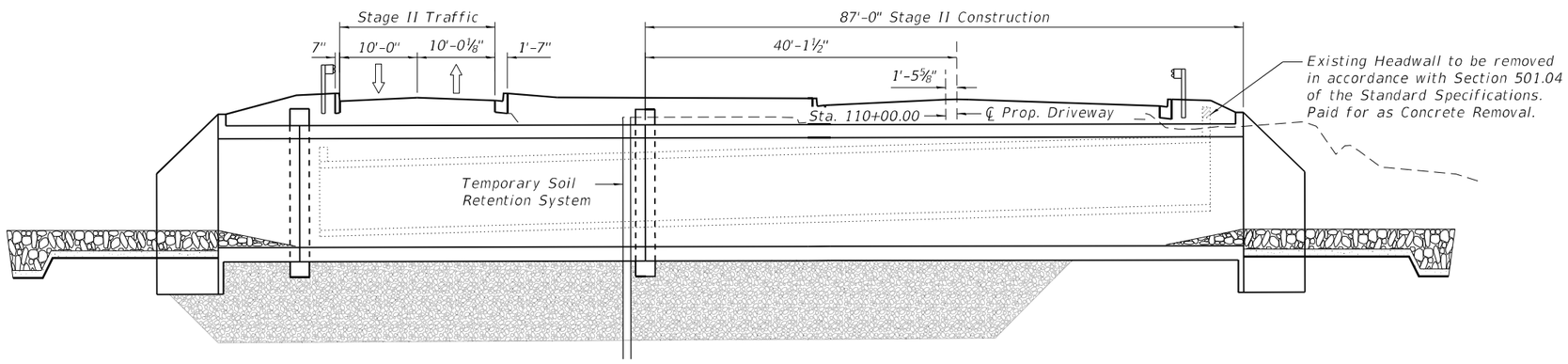

STAGE II REMOVAL & CONSTRUCTION

(Dimensions along ℄ Culvert)

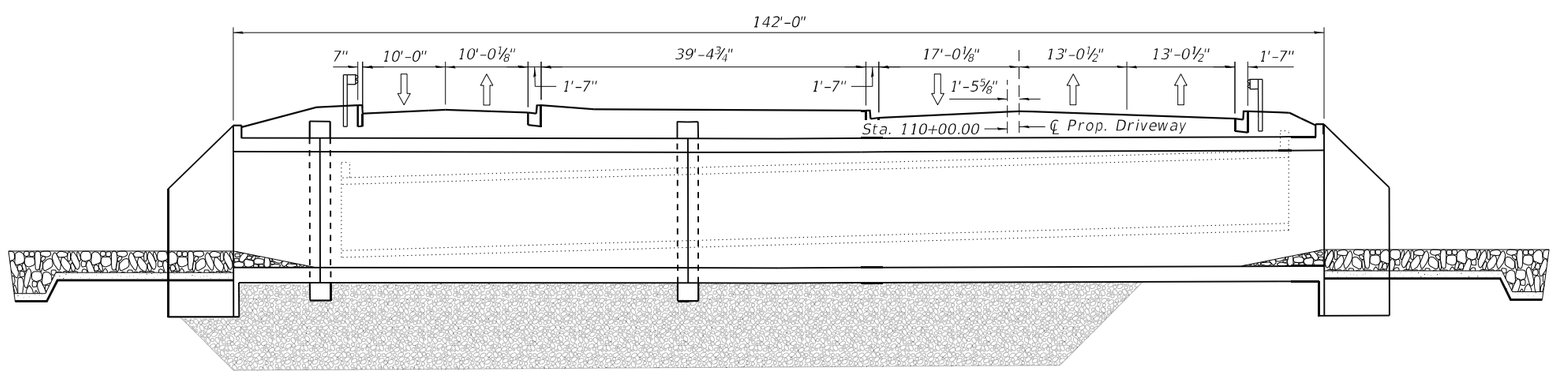

FINAL CONDITION

(Dimensions along ℄ Culvert)

CULVERT CONSTRUCTION SEQUENCE

1. Shift traffic to north driveway, and close south driveway to all traffic.
2. Install Temporary Soil Retention System.
3. Divert water from construction area through the existing culvert.
4. Construct south portion of proposed culvert.
5. Reconstruct south driveway (See Roadway Plans for Details).
6. Shift traffic to south driveway, and close north driveway to all traffic.
7. Adjust and install Temporary Soil Retention System for the next stage of construction, removing any interfering portions of the existing wingwalls.
8. Construct north portion of proposed culvert.
9. Reconstruct north driveway (See Roadway Plans for Details).
10. Remove water diversion measures.
11. Fill any portions of the existing culvert that have not been removed.
12. Open driveway to traffic.

MODEL: Default
FILE NAME: E:\1902\Struct\Final Design\Design Plans\CADD_Sheets\0168351-D162H82-003-Staging.dgn

LIN ENGINEERING, LTD. Consulting Engineers Springfield, Illinois	USER NAME = Mike Haley	DESIGNED - AGJ	REVISED -	STATE OF ILLINOIS DEPARTMENT OF TRANSPORTATION	STAGE CONSTRUCTION DETAILS STRUCTURE NO. 016-8351	F.A.U. RTE.	SECTION	COUNTY	TOTAL SHEETS / SHEET NO.
		CHECKED - VPT	REVISED -			3578	2019-001-R	COOK	255 / 164
	PLOT TIME = 8:27:32 AM	DRAWN - AGJ	REVISED -					CONTRACT NO. 62H82	
	PLOT DATE = 12/23/2022	CHECKED - VPT	REVISED -		SHEET 3 OF 8 SHEETS		ILLINOIS FED. AID PROJECT		

12/23/2022 8:27:32 AM

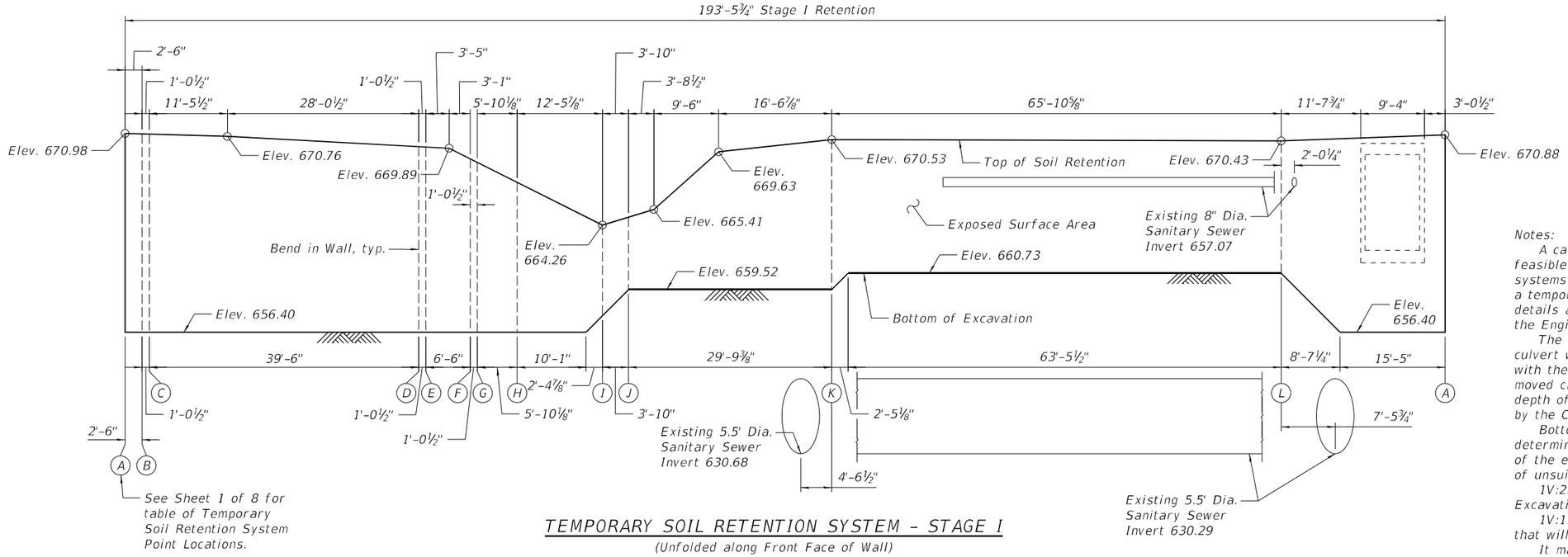

TEMPORARY SOIL RETENTION SYSTEM - STAGE I

(Unfolded along Front Face of Wall)

Notes:

A cantilevered sheet piling design does not appear feasible and additional members or other retention systems may be necessary. The Contractor shall submit a temporary soil retention system design including plan details and calculations for review and acceptance by the Engineer.

The temporary soil retention system west of the culvert was located in an attempt to avoid interference with the Existing 5.5' Dia. Sanitary Sewer, and may be moved closer to the proposed culvert if the embedment depth of the temporary soil retention system determined by the Contractor's design permits.

Bottom of Excavation west of the culvert was determined assuming a 1V:2H slope up from the bottom of the excavation required for removal and replacement of unsuitable materials or the bottom of the culvert.

1V:2H slopes have been assumed along the Bottom of Excavation within the in-situ soils.

1V:1.5H slopes have been assumed within material that will be placed as part of this contract.

It may be necessary for a portion of the Stage I Temporary Soil Retention System to remain in place for use during Stage II. To be determined in field at time of construction by Contractor.

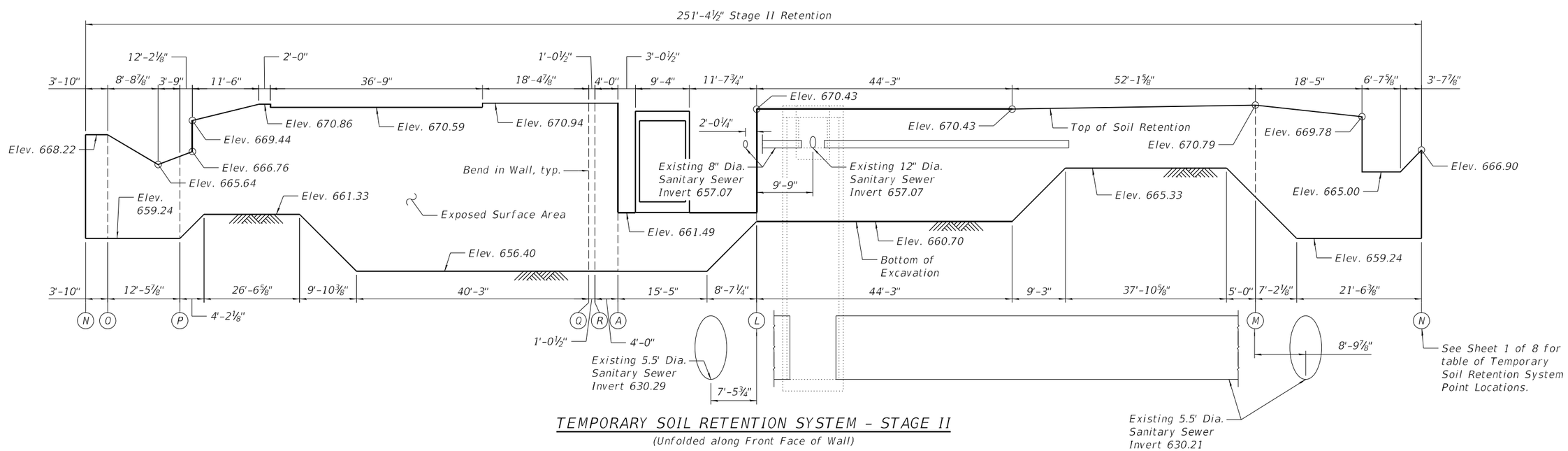

TEMPORARY SOIL RETENTION SYSTEM - STAGE II

(Unfolded along Front Face of Wall)

MODEL: Default
FILE NAME: E:\1902\Struct\Final Design\Design Plans\CADD_Sheets\0168351-D162H82-004-TSRS.dgn

LIN ENGINEERING, LTD. Consulting Engineers Springfield, Illinois	USER NAME = Mike Haley	DESIGNED - AGJ	REVISED -	STATE OF ILLINOIS DEPARTMENT OF TRANSPORTATION	TEMPORARY SOIL RETENTION SYSTEM STRUCTURE NO. 016-8351
		CHECKED - VPT	REVISED -		
	PLOT TIME = 8:27:33 AM	DRAWN - AGJ	REVISED -		
	PLOT DATE = 12/23/2022	CHECKED - VPT	REVISED -		SHEET 4 OF 8 SHEETS

F.A.U. RTE.	SECTION	COUNTY	TOTAL SHEETS	SHEET NO.
3578	2019-001-R	COOK	255	165
		CONTRACT NO. 62H82		
		ILLINOIS FED. AID PROJECT		

12/23/2022 8:27:33 AM

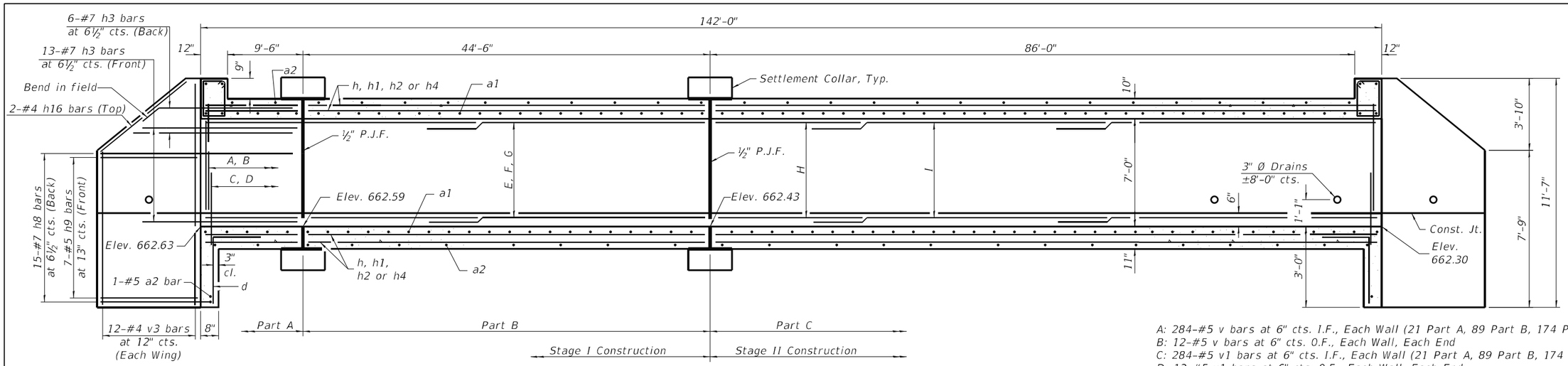

LONGITUDINAL SECTION

(Dimensions along ℄ Culvert)

A: 284-#5 v bars at 6" cts. I.F., Each Wall (21 Part A, 89 Part B, 174 Part C)
B: 12-#5 v bars at 6" cts. O.F., Each Wall, Each End
C: 284-#5 v1 bars at 6" cts. I.F., Each Wall (21 Part A, 89 Part B, 174 Part C)
D: 12-#5 v1 bars at 6" cts. O.F., Each Wall, Each End
E: 8-#4 h5 bars at 12" cts. I.F., Each Wall, Part A
F: 8-#4 h7 bars at 12" cts. I.F., Each Wall, Part B
G: 8-#4 h6 bars at 12" cts. I.F., Each Wall, (2'-3" Min. Lap to h7 bars), Part B
H: 8-#4 h10 bars at 12" cts. I.F., Each Wall (2'-3" Min. Lap to h6 bars)
I: 8x2-#4 h6 bars at 12" cts. I.F., Each Wall (2'-3" Min. Lap)

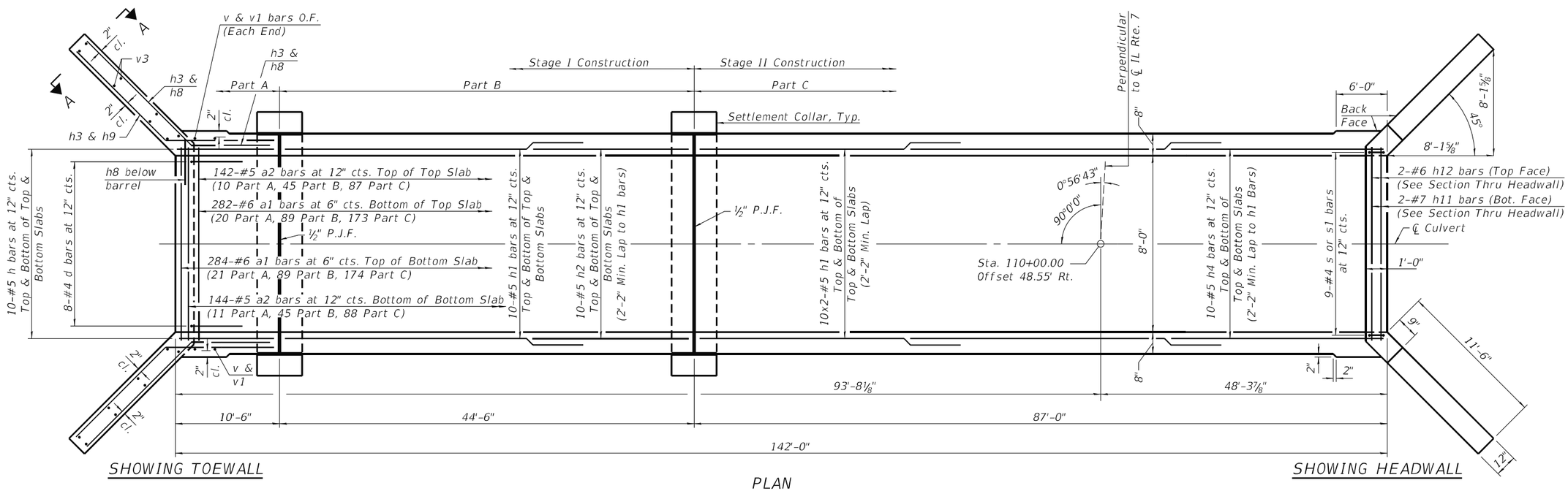

SHOWING TOEWALL

PLAN

SHOWING HEADWALL

Notes:

A distance of half the length of the wingwall but not less than six feet of the barrel shall be poured monolithically with the wingwalls.

Bars indicated thus 12 x 4-#5 etc. indicates 12 lines of bars with 4 lengths per line.

At the Contractor's option, a longer v1 bar may be ordered to replace the v bar. No reduction in quantities shall be made for this substitution.

See the Sheet 6 of 8 for Section Thru Barrel, Section A-A, settlement collar details, field cutting diagram, bar bend diagrams and Bill of Material.

(Sheet 1 of 2)

MODEL: Default
FILE NAME: E:\1902\Struct\Final Design\Design Plans\CADD_Sheets\0168351-D162H82-005-Culvert Details 1.dgn

LIN ENGINEERING, LTD. Consulting Engineers Springfield, Illinois	USER NAME = Mike Haley	DESIGNED - AGJ	REVISED -	STATE OF ILLINOIS DEPARTMENT OF TRANSPORTATION	CULVERT DETAILS STRUCTURE NO. 016-8351	F.A.U. RTE.	SECTION	COUNTY	TOTAL SHEETS / SHEET NO.
		CHECKED - VPT	REVISED -			3578	2019-001-R	COOK	255 / 166
	PLOT TIME = 8:27:34 AM	DRAWN - AGJ	REVISED -					CONTRACT NO. 62H82	
	PLOT DATE = 12/23/2022	CHECKED - VPT	REVISED -		SHEET 5 OF 8 SHEETS		ILLINOIS FED. AID PROJECT		

12/23/2022 8:27:34 AM

See Sheet 5 of 8 for additional culvert details and notes.

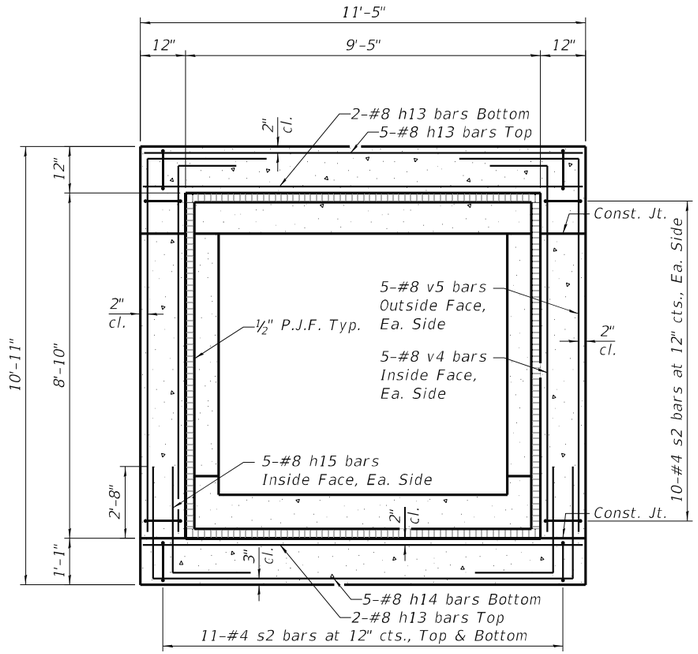

SECTION THRU BOX AT SETTLEMENT COLLAR

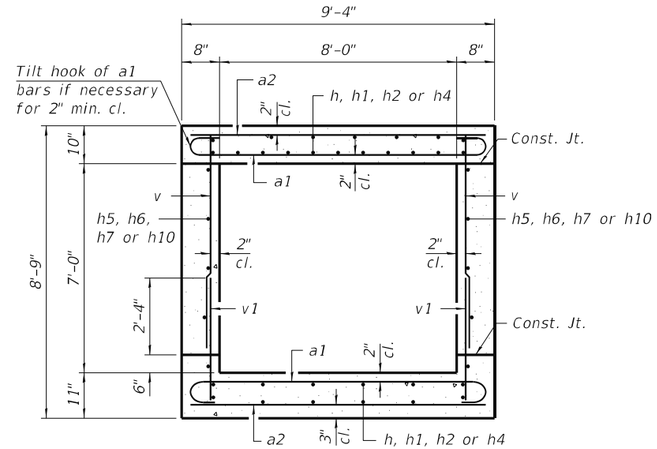

SECTION THRU BARREL

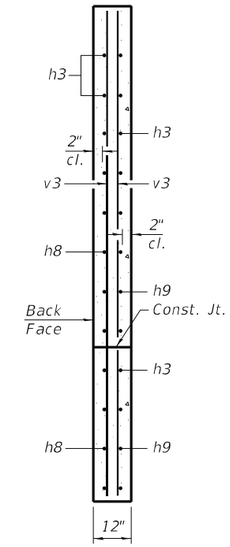

SECTION A-A

BILL OF MATERIAL

Bar	No.	Size	Length	Shape
a1	566	#6	10'-4"	
a2	288	#5	9'-0"	
d	16	#4	4'-5"	
h	40	#5	10'-2"	
h1	120	#5	30'-0"	
h2	40	#5	16'-8"	
h3	76	#7	9'-3"	
h4	40	#5	31'-4"	
h5	16	#4	10'-2"	
h6	48	#4	30'-0"	
h7	16	#4	16'-9"	
h8	60	#7	14'-6"	
h9	28	#5	11'-2"	
h10	16	#4	31'-6"	
h11	4	#7	9'-0"	
h12	4	#6	8'-3"	
h13	18	#8	11'-1"	
h14	10	#8	18'-1"	
h15	20	#8	4'-9"	
h16	8	#4	11'-5"	
s	9	#4	4'-11"	
s1	9	#4	4'-9"	
s2	84	#4	6'-5"	
v	616	#5	7'-0"	
v1	616	#5	3'-6"	
v3	48	#4	18'-8"	
v4	20	#8	12'-6"	
v5	20	#8	12'-6"	
Concrete Box Culverts			Cu. Yd.	162.1
Reinforcement Bars			Pound	33,380

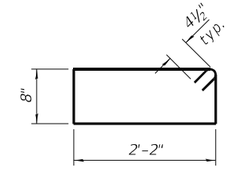

BAR s2

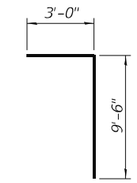

BAR v5

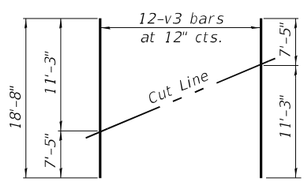

FIELD CUTTING DIAGRAM

Order bars shown full length. Cut as shown and use remainder of bars in opposite face of wingwall.

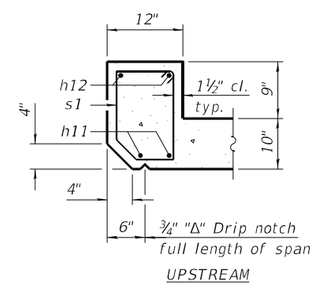

UPSTREAM

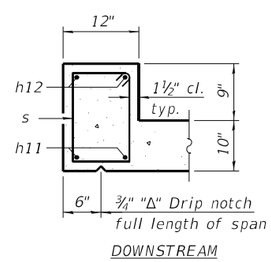

DOWNSTREAM

SECTION THRU HEADWALL

BAR v4

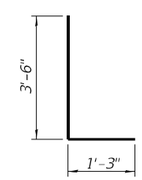

BAR h15

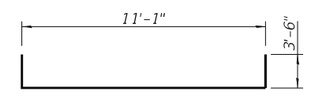

BAR h14

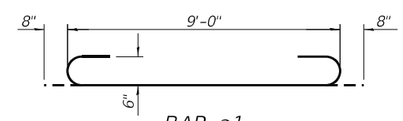

BAR a1

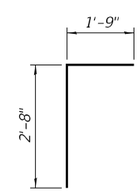

BAR d

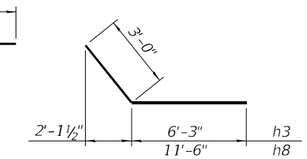

BARS h3 & h8

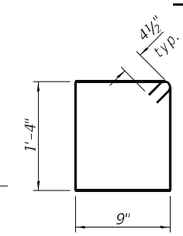

BAR s

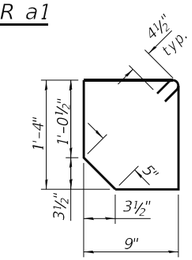

BAR s1

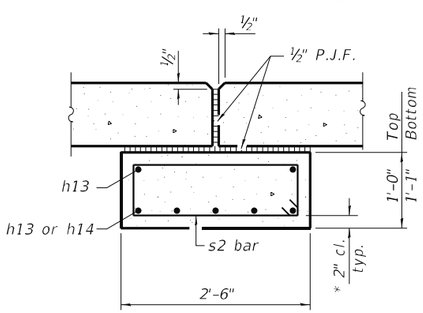

* Provide 3" cl. at the base of the bottom slab collar.

SECTION THRU TOP AND BOTTOM SLAB

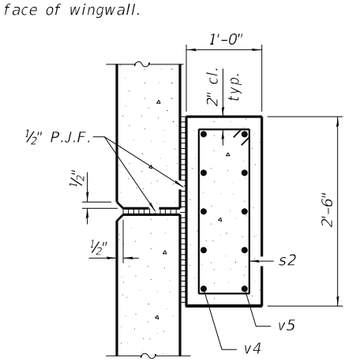

SECTION THRU SIDEWALL

(Sheet 2 of 2)

Wang Engineering
wangeng@wangeng.com
1145 N. Main Street
Lombard/IL/60148
Telephone: 6309539928
Fax: 6309539938

BORING LOG B-03

WEI Job No.: 411-05-02

Client: James J. Benes & Associates
Project: IL Route 7 from 131st Street to 135th Street
Location: Cook County, Illinois

Datum: NAVD 88
Elevation: 670.57 ft
North: 1814295.09 ft
East: 1118104.66 ft
Station: 108+99.67
Offset: 31.57 RT

Elevation (ft)	SOIL AND ROCK DESCRIPTION	Depth (ft)	Sample Type / recovery	Sample No.	SPT Values (blw/6 in)	Qu (tsf)	Moisture Content (%)
670.2	4-inch thick ASPHALT --PAVEMENT--						
669.9	8-inch thick CONCRETE --PAVEMENT--						
	Medium dense, brown and black SANDY GRAVEL; moist --FILL--			1	11 8 9	NP	8
667.6	Medium stiff to very stiff, brown and black SILTY CLAY LOAM, trace gravel; damp to wet --FILL-- --RDR 2-- --wet spoon recovery--	5		2	5 4 4	2.13 B	16
				3	1 1 1	0.75 P	22
662.6	Very soft to soft, brown, black and gray SILTY CLAY to SILTY CLAY LOAM, some organic matter --RDR 1--	10		4	0 0 0	0.16 B	62
				5	PUSH	0.25 P	84
		15		6	0 1 1	0.25 B	62
	~L_L(%)=65, P_L(%)=24-- --%Gravel=0.0-- --%Sand=1.4-- --%Silt=62.8-- --%Clay=35.8-- --%Organics = 7.5--			7	1 0 0	0.16 B	66
		20		8	0 0 0	0.16 B	59
				9	1 1 1	0.25 B	49
647.6	Medium stiff, gray and brown SILTY CLAY, trace gravel; damp --RDR 1-2--	25		10	1 3 3	0.90 B	20
				11	3 5 6	1.64 B	18
640.6	Boring terminated at 30.00 ft	30		12	3 5 5	1.48 B	19
		35					
		40					

WANGENGINC 411050.2.GPJ WANGENG.GDT 5/27/21

GENERAL NOTES

Begin Drilling: 03-04-2021 Complete Drilling: 03-04-2021
Drilling Contractor: Wang Testing Services Drill Rig: 20D50T [80%]
Driller: R&J Logger: F. Bozga Checked by: C. Marin
Drilling Method: 2.25" ID HSA; boring backfilled upon completion

WATER LEVEL DATA

While Drilling: 5.50 ft
At Completion of Drilling: 22.00 ft
Time After Drilling: NA
Depth to Water: NA

The stratification lines represent the approximate boundary between soil types; the actual transition may be gradual.

Wang Engineering
wangerg@wangeng.com
1145 N. Main Street
Lombard/IL/60148
Telephone: 6309539928
Fax: 6309539938

BORING LOG CB-08

WEI Job No.: 411-05-01

Client: James J. Benes & Associates
Project: IL Route 7 from 131st Street to 135th Street
Location: Cook County, IL

Datum: NAVD 88
Elevation: 669.84 ft
North: 1814297.42 ft
East: 1118109.03 ft
Station: 109+05.6
Offset: 48.8' RT

Elevation (ft)	SOIL AND ROCK DESCRIPTION	Depth (ft)	Sample Type / recovery	Sample No.	SPT Values (blw/6 in)	Qu (tsf)	Moisture Content (%)
669.3	6-inch thick, gray SANDY GRAVEL						
	Stiff to hard, black and brown SILTY CLAY to SILTY CLAY LOAM, and gravel; damp --FILL-- --RDR 2--			1	18 9 10 17	1.15 S	12
				2	8 6 9 6	4.76 B	20
665.3	Stiff, black SILTY CLAY, trace gravel; damp --BURIED TOPSOIL--	5		3	3 2 3 4	1.23 B	29
664.3	Medium stiff, black and gray CLAY to SILTY CLAY, little organic matter; wet --RDR 1--			4	2 2 2 3	0.90 B	55
661.3	Soft to medium stiff, dark brown and gray Organic SILTY CLAY; damp to moist --RDR 1--	10		5	0 1 1 2	0.33 B	71
				6	1 1 1 1	< 0.25 P	83
		15		7	0 0 1	0.16 B	80
				8	0 0 1	< 0.25 P	58
649.8	Boring terminated at 20.00 ft	20		9	0 1 1	0.33 B	63

WANGENGINC 411050.1.GPJ WANGENG.GDT 8/19/20

GENERAL NOTES

Begin Drilling: 09-25-2019 Complete Drilling: 09-25-2019
Drilling Contractor: Wang Testing Services Drill Rig:
Driller: R&J Logger: I. Nenn Checked by: C. Marin
Drilling Method: 2.25" HSA, boring backfilled upon completion

WATER LEVEL DATA

While Drilling: DRY
At Completion of Drilling: DRY
Time After Drilling: NA
Depth to Water: NA

The stratification lines represent the approximate boundary between soil types; the actual transition may be gradual.

The boring logs represent point information. Presentation of this information in no way implies that subsurface conditions are the same at locations other than the exact location of the boring.

(Sheet 1 of 2)

MODEL: Default
FILE NAME: E:\1902\Struct\Final Design\Design Plans\CADD_Sheets\0168351-D162H82-007-Boring Logs 1.dgn

LIN ENGINEERING, LTD.
Consulting Engineers
Springfield, Illinois

USER NAME = Mike Haley	DESIGNED - AGJ	REVISED -	
	CHECKED - VPT	REVISED -	
PLOT TIME = 8:27:35 AM	DRAWN - AGJ	REVISED -	
PLOT DATE = 12/23/2022	CHECKED - VPT	REVISED -	

STATE OF ILLINOIS
DEPARTMENT OF TRANSPORTATION

SOIL BORING LOGS
STRUCTURE NO. 016-8351

SHEET 7 OF 8 SHEETS

F.A.U. RTE.	SECTION	COUNTY	TOTAL SHEETS	SHEET NO.
3578	2019-001-R	COOK	255	168

CONTRACT NO. 62H82
ILLINOIS FED. AID PROJECT

12/23/2022 8:27:35 AM

Wang Engineering
wangeng@wangeng.com
1145 N. Main Street
Lombard/IL/60148
Telephone: 6309539928
Fax: 6309539938

BORING LOG CB-09

WEI Job No.: 411-05-01

Client: James J. Benes & Associates
Project: IL Route 7 from 131st Street to 135th Street
Location: Cook County, IL

Datum: NAVD 88
Elevation: 670.58 ft
North: 1814348.16 ft
East: 1118138.83 ft
Station: 109+58.0
Offset: 47.0' RT

Elevation (ft)	SOIL AND ROCK DESCRIPTION	Sample No.	SPT Values (blw/6 in)	Qu (tsf)	Moisture Content (%)
670.34	4-inch thick, black SILTY CLAY LOAM --TOPSOIL--	1	2 3 4 9	2.54 B	20
668.8	Very stiff, brown SILTY CLAY, trace gravel; damp --FILL-- --RDR 2--	2	10 17 11 9	NP	14
667.1	Medium dense, brown SAND, trace clay; damp --FILL-- --RDR 2--	3	2 2 3 4	1.23 B	20
	Stiff, gray and brown SILTY CLAY, trace gravel; damp to moist --FILL-- --RDR 1--	4	2 2 2 4	1.23 S	47
663.6	Stiff, black and gray CLAY to SILTY CLAY, trace organic matter; damp --RDR 1-- --L_L(%)=68, P_L(%)=26-- --%Gravel=0.8-- --%Sand=4.8-- --%Silt=48.6-- --%Clay=45.7-- --A-7-6(45)--	5	2 2 2 3	1.07 B	45
660.1	Soft to medium stiff, brown, black and gray SILTY CLAY, some organic matter; moist --RDR 1--	6	1 2 2	0.41 B	70
		7	1 1 2	0.66 B	63
		8	0 0 1	0.41 B	59
650.6	Boring terminated at 20.00 ft	9	1 1 2	0.41 B	59

Profile / Sample Type / Recovery / Depth (ft) / Elevation (ft) / SOIL AND ROCK DESCRIPTION / Sample No. / SPT Values (blw/6 in) / Qu (tsf) / Moisture Content (%)

GENERAL NOTES

Begin Drilling: 09-25-2019 Complete Drilling: 09-25-2019
Drilling Contractor: Wang Testing Services Drill Rig:
Driller: R&J Logger: I. Nenn Checked by: C. Marin
Drilling Method: 2.25" HSA, boring backfilled upon completion

WATER LEVEL DATA

While Drilling: DRY
At Completion of Drilling: DRY
Time After Drilling: NA
Depth to Water: NA

The stratification lines represent the approximate boundary between soil types; the actual transition may be gradual.

WANGENGINC 411501.GPJ WANGENG.GDT 8/19/20

Wang Engineering
wangerg@wangeng.com
1145 N. Main Street
Lombard/IL/60148
Telephone: 6309539928
Fax: 6309539938

BORING LOG CB-10

WEI Job No.: 411-05-01

Client: James J. Benes & Associates
Project: IL Route 7 from 131st Street to 135th Street
Location: Cook County, IL

Datum: NAVD 88
Elevation: 670.76 ft
North: 1814422.42 ft
East: 1118149.54 ft
Station: 110+34.5
Offset: 29.3' RT

Elevation (ft)	SOIL AND ROCK DESCRIPTION	Sample No.	SPT Values (blw/6 in)	Qu (tsf)	Moisture Content (%)
669.8	11-inch thick, ASPHALT --PAVEMENT--				
668.3	Loose, black SANDY GRAVEL, little clay --FILL--	1	5 5 4 4	NP	13
	Very soft, black CLAY to SILTY CLAY, trace organic matter; moist --RDR 1--	2	3 2 3 4	< 0.25 P	61
665.3	Medium stiff to very stiff, brown and gray SILTY CLAY, trace gravel; damp --RDR 1 to 2-- --L_L(%)=41, P_L(%)=19-- --%Gravel=1.8-- --%Sand=8.4-- --%Silt=49.1-- --%Clay=40.7-- --A-7-6(20)--	3	2 3 4 4	1.72 B	26
		4	2 3 3 5	3.12 B	21
		5	3 5 6 7	2.87 B	22
659.5 / 659.1	Medium stiff, brown and gray LOAM; damp Medium stiff to hard, brown and gray SILTY CLAY, little gravel; damp to moist --RDR 2--	6	2 3 3	0.82 B	23
		7	2 3 3	1.23 B	17
		8	4 5 6	4.35 B	18
650.8	Boring terminated at 20.00 ft	9	3 3 6	1.48 B	19

Profile / Sample Type / Recovery / Depth (ft) / Elevation (ft) / SOIL AND ROCK DESCRIPTION / Sample No. / SPT Values (blw/6 in) / Qu (tsf) / Moisture Content (%)

GENERAL NOTES

Begin Drilling: 09-25-2019 Complete Drilling: 09-25-2019
Drilling Contractor: Wang Testing Services Drill Rig:
Driller: R&J Logger: I. Nenn Checked by: C. Marin
Drilling Method: 2.25" HSA, boring backfilled upon completion

WATER LEVEL DATA

While Drilling: DRY
At Completion of Drilling: DRY
Time After Drilling: NA
Depth to Water: NA

The stratification lines represent the approximate boundary between soil types; the actual transition may be gradual.

WANGENGINC 411501.GPJ WANGENG.GDT 8/19/20

The boring logs represent point information. Presentation of this information in no way implies that subsurface conditions are the same at locations other than the exact location of the boring.

(Sheet 2 of 2)

MODEL: Default
FILE NAME: E:\1902\Struct\Final Design\Design Plans\CADD_Sheets\0168351-D162H82-008-Boring Logs 2.dgn
12/23/2022 8:27:39 AM

LIN ENGINEERING, LTD.
Consulting Engineers
Springfield, Illinois

USER NAME = Mike Haley	DESIGNED - AGJ	REVISED -	
	CHECKED - VPT	REVISED -	
PLOT TIME = 8:27:39 AM	DRAWN - AGJ	REVISED -	
PLOT DATE = 12/23/2022	CHECKED - VPT	REVISED -	

STATE OF ILLINOIS
DEPARTMENT OF TRANSPORTATION

SOIL BORING LOGS
STRUCTURE NO. 016-8351

SHEET 8 OF 8 SHEETS

F.A.U. RTE.	SECTION	COUNTY	TOTAL SHEETS	SHEET NO.
3578	2019-001-R	COOK	255	169

CONTRACT NO. 62H82

ILLINOIS FED. AID PROJECT

Bench Mark: BM #7: Cut " □ " in East end of headwall of concrete structure south of commercial entrance located along IL Rte. 7, near Sta. 120+03 Rt. Elevation = 669.52 (NAVD88).

Existing Structure: The existing Corrugated Metal Pipe (CMP) was built at an unkown date. Existing structure is a 50'-7" long, 5' diameter CMP with cast-in-place concrete headwalls on both ends. Existing structure will be removed and replaced with a single barrel box culvert. Driveway will be closed for expedited construction. No Salvage.

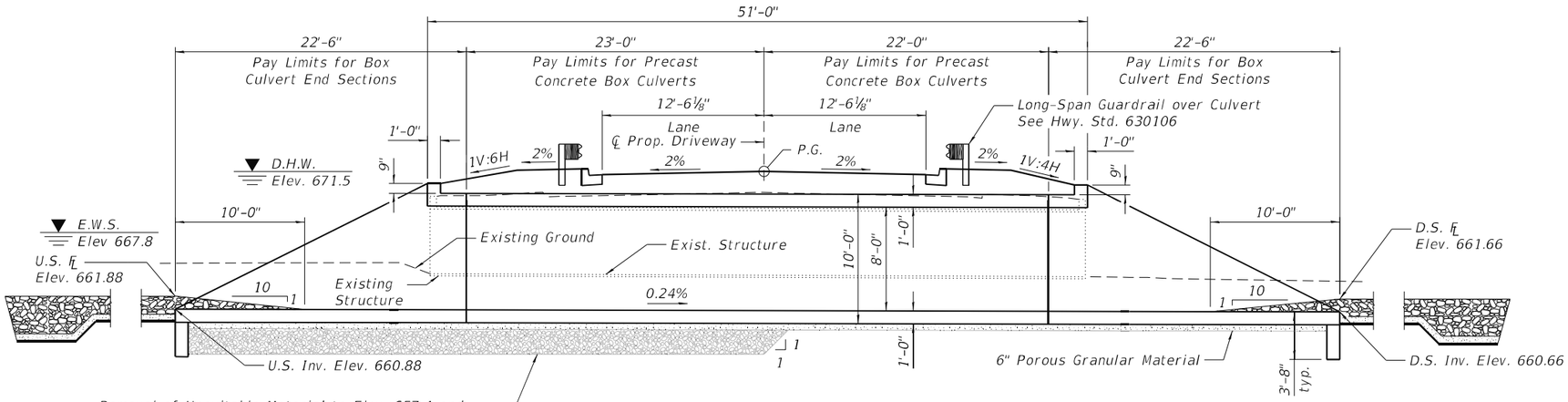

Removal of Unsuitable Material to Elev. 657.4 and replacement with Aggregate Subgrade Improvement over a layer of Geotechnical Fabric for Ground Stabilization 2'-0" beyond each side, typ.. The limits and quantities of removal and replacement shown are based on the boring data and may be modified by the District Geotechnical and Field Engineers for variable subsurface conditions encountered in the field.

LONGITUDINAL SECTION

(Dimensions along ℄ Culvert)

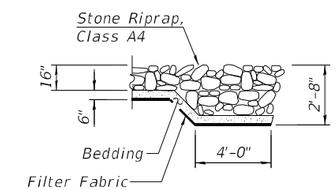

SECTION A-A

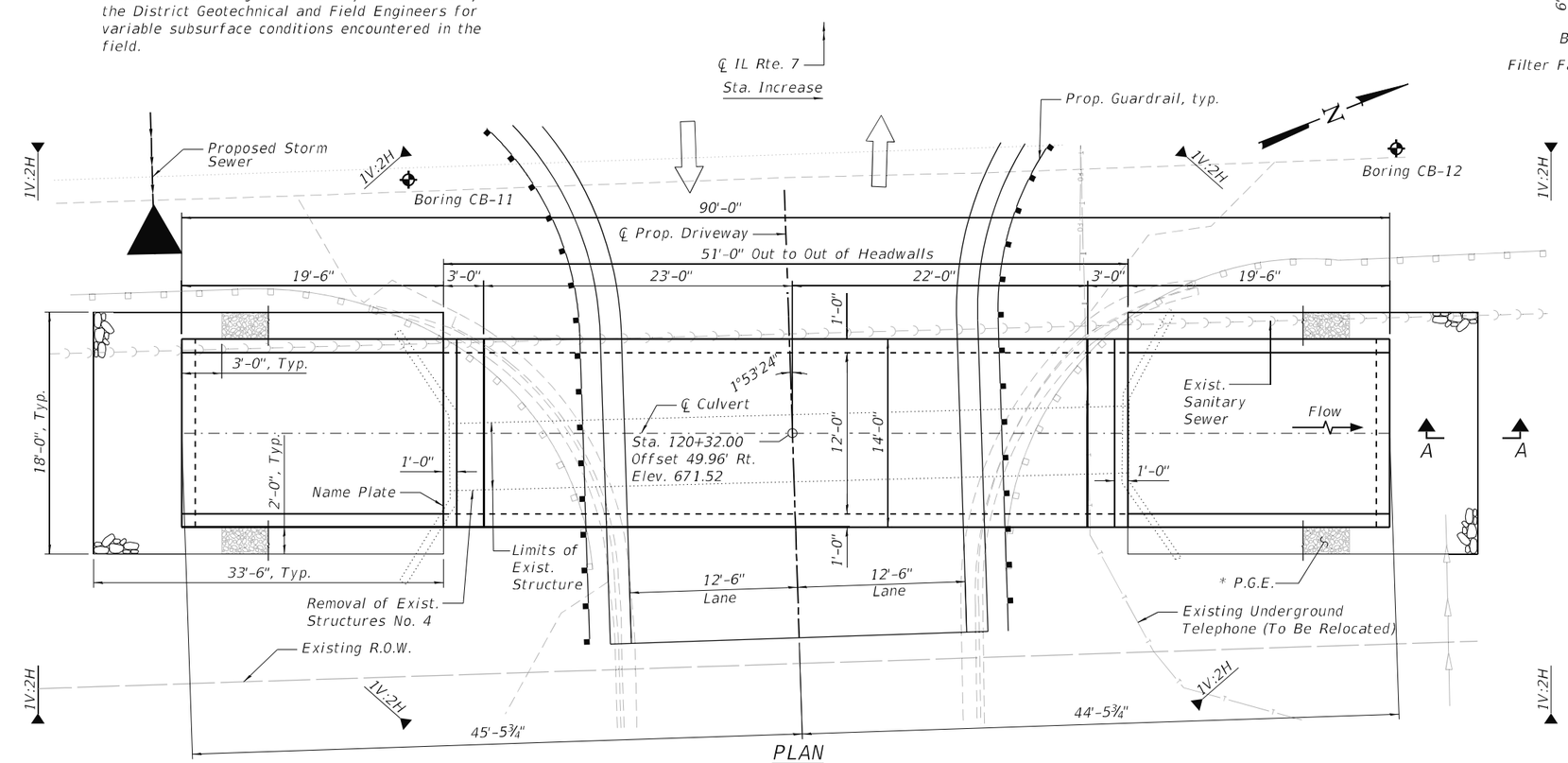

PLAN

*2'-0" width of P.G.E. to be installed full length of proposed culvert, to 3'-0" from the end of the proposed wingwalls. Adjacent to culvert, vertical limits are from bottom of bottom slab to top of top slab. Along wingwalls, vertical limits are from bottom of culvert bottom slab to 1'-0" below top of wingwall. See pay limits for Porous Granular Embankment detail on sheet 2 of 5. P.G.E. behind wingwalls shall be capped with a 12" thick layer of impervious material. Cost of impervious material shall be included in the cost of Porous Granular Embankment.

DESIGN SPECIFICATIONS

2020 AASHTO LRFD Bridge Design Specifications, 9th Edition

LOADING HL-93

Allow 50#/sq. ft. for future wearing surface.

DESIGN STRESSES

PRECAST UNITS (New Construction)
f'c = 5,000 psi
fy = 65,000 psi (Welded Wire Reinforcement)

FIELD UNITS (New Construction)
f'c = 3,500 psi
fy = 60,000 psi (Reinforcement)

INDEX OF SHEETS

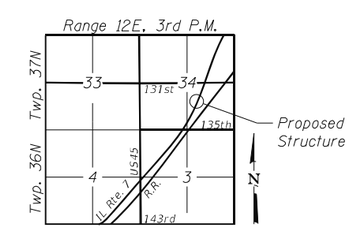

LOCATION SKETCH

GENERAL PLAN AND ELEVATION
DRIVEWAY OVER MILL CREEK
F.A.U. RTE. 3578 SEC. 2019-001-R
COOK COUNTY
STATION 120+32.00
S.N. 016-8352

MODEL: Default
FILE NAME: E:\1902\Struct\Final Design\Design Plans\CADD_Sheets\0168352-D162H82-001-GPE.dgn

LIN ENGINEERING, LTD. Consulting Engineers Springfield, Illinois	USER NAME = Mike Haley	DESIGNED - AGJ	REVISED -	STATE OF ILLINOIS DEPARTMENT OF TRANSPORTATION	GENERAL PLAN AND ELEVATION STRUCTURE NO. 016-8352
		CHECKED - VPT	REVISED -		
	PLOT TIME = 11:15:21 AM	DRAWN - AGJ	REVISED -		
	PLOT DATE = 12/23/2022	CHECKED - VPT	REVISED -		SHEET 1 OF 5 SHEETS

F.A.U. RTE.	SECTION	COUNTY	TOTAL SHEETS	SHEET NO.
3578	2019-001-R	COOK	255	170
		CONTRACT NO. 62H82		
		ILLINOIS FED. AID PROJECT		

12/23/2022 11:15:21 AM

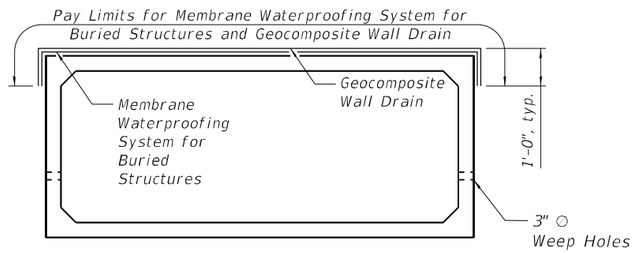

LIMITS OF MEMBRANE WATERPROOFING

Longitudinal limits of membrane waterproofing for the precast concrete culvert are along the full length between the headwalls.

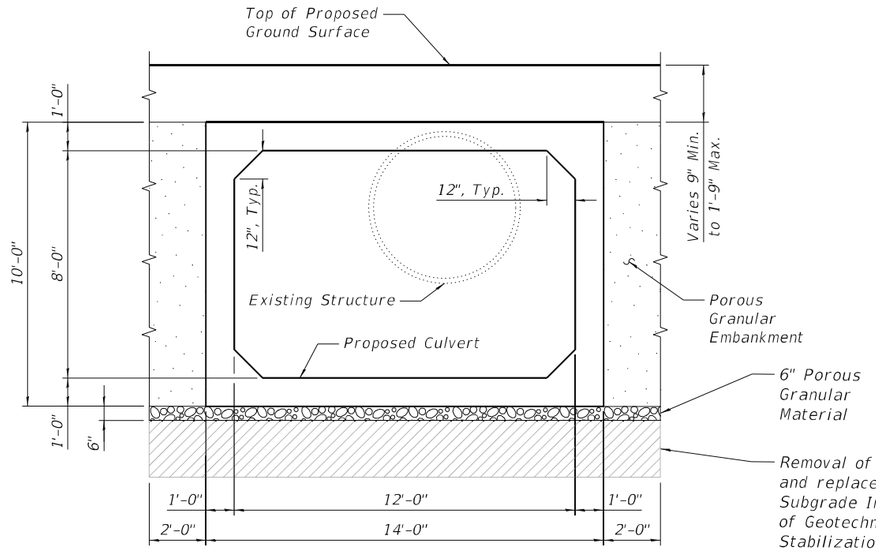

SECTION THRU PRECAST BOX CULVERT

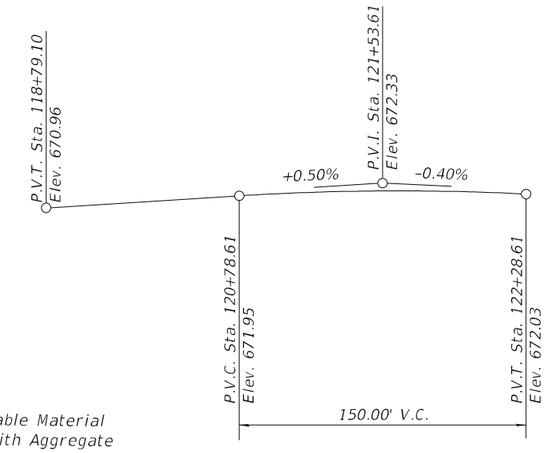

PROFILE GRADE

Along ℄ Proposed IL Rte. 7

STATION 120+32.00
BUILT 202_ BY
STATE OF ILLINOIS
F.A.U. RT. 3578 SEC. 2019-001-R
LOADING HL-93
STR. NO. 016-8352

NAME PLATE

See Std. 515001

WATERWAY INFORMATION

Drainage Area = 5.92 sq. mi. Low Grade Elev. = 671.56 @ Sta. 120+00

Flood	Freq. Yr.	Q C.F.S.	Opening Sq. Ft. Exist.	Opening Sq. Ft. Prop.	Nat. H.W.E.	Head - Ft. Exist.	Head - Ft. Prop.	Headwater El. Exist.	Headwater El. Prop.
	10	152	19.6	72.3	670.0	1.5	0	671.5	667.9
Design	50	330	19.6	84.0	671.5	0.9	0	672.4	669.4
Base	100	387	19.6	84.0	672.1	0.8	0	672.9	670.0
Overtopping									
Max. Calc.	100	387	19.6	84.0	672.1	0.8	0	672.9	670.0

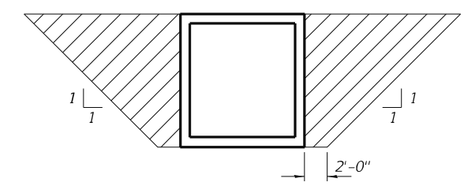

PAY LIMITS FOR POROUS GRANULAR EMBANKMENT

(Hatched area)

GENERAL NOTES

The precast box culvert sections shall conform to the requirements of ASTM C 1577.

Drain holes shall be provided on exterior culvert walls for each precast box segment with a clear rise greater than 3 ft. The drain hole shall be located within 1/3 of the clear rise of the box culvert, shall not intercept the haunch, and shall conform to the requirements of Article 503.11 of the Standard Specifications.

Nonwoven geotextile fabric shall conform to the requirements of Art. 1080.01 of the Standard Specifications. The minimum weight of the fabric shall be 6 ounces per square yard, unless noted otherwise.

Precast concrete box culverts and box culvert end sections shall be backfilled with Porous Granular Embankment in the required excavation areas on the sides of the box culvert from the top of the box culvert to the bottom of the box culvert. This area of P.G.E. is included in the Porous Granular Embankment pay item. The 6-inch thick layer of porous granular material required under the precast concrete box culvert, according to Section 540.06 of the Standard Specifications, shall also apply to the end sections. Cost of this porous granular material will not be paid for separately but shall be included in the unit price of the work for which it is required.

Plan dimensions and details relative to existing plans are subject to nominal construction variations. The Contractor shall field verify existing dimensions and details affecting new construction and make necessary approved adjustments prior to construction or ordering of materials. Such variations shall not be cause for additional compensation for a change in scope of the work, however, the Contractor will be paid for the quantity actually furnished at the unit price bid for the work.

See Special Provisions and Roadway and Maintenance of Traffic plans for time restrictions relative to installation of the structure.

CULVERT CONSTRUCTION SEQUENCE

1. Close driveway to all traffic.
2. Divert water from construction area.
3. Perform removal of existing structure.
4. Perform construction of replacement structure.
5. Open driveway to traffic.
6. Remove water diversion measures.

PRECAST BOX CULVERT SCHEDULE (ASTM C1577)

Station	Size (Span x Height)	Skew	Design Fill Min.	Design Fill Max.
120+32.00	12'-0" x 8'-0"	1°53'24"	1'-4"	1'-9"

The Design Fill heights shown in the culvert schedule are located between the curb and gutter flow lines.

TOTAL BILL OF MATERIAL

ITEM	UNIT	TOTAL
Porous Granular Embankment	Cu. Yd.	301
Geotechnical Fabric for Ground Stabilization	Sq. Yd.	93
Stone Riprap, Class A4	Sq. Yd.	103
Filter Fabric	Sq. Yd.	76
Aggregate Subgrade Improvement	Cu. Yd.	62
Removal of Existing Structures No. 4	Each	1
Removal and Disposal of Unsuitable Material for Structures	Cu. Yd.	62
Name Plates	Each	1
Box Culvert End Sections, Culvert No. 4	Each	2
Precast Concrete Box Culverts 12'x8'	Foot	45
Geocomposite Wall Drain	Sq. Yd.	91
Membrane Waterproofing System for Buried Structures	Sq. Yd.	91

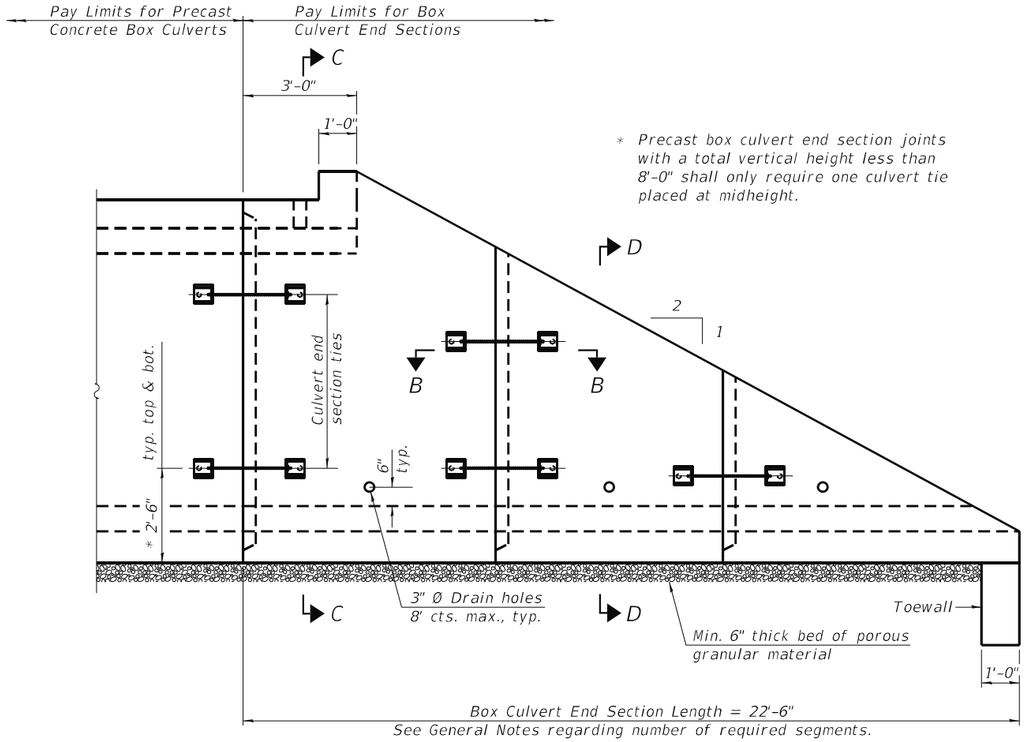

ELEVATION

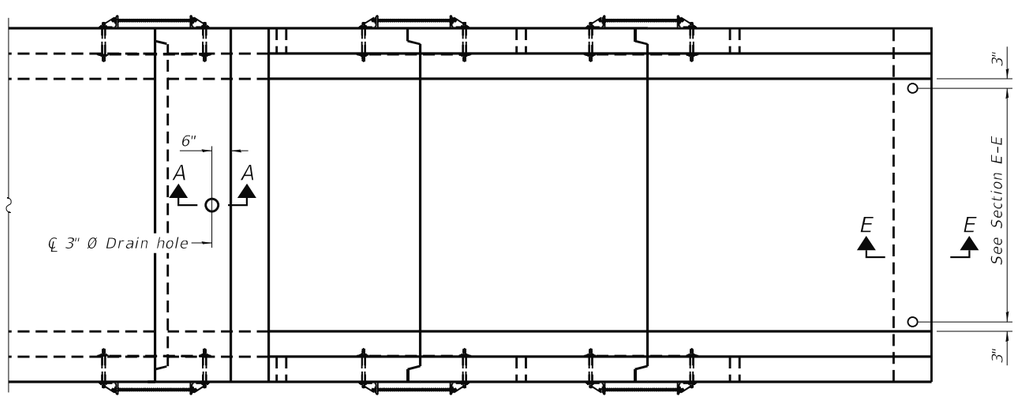

PLAN

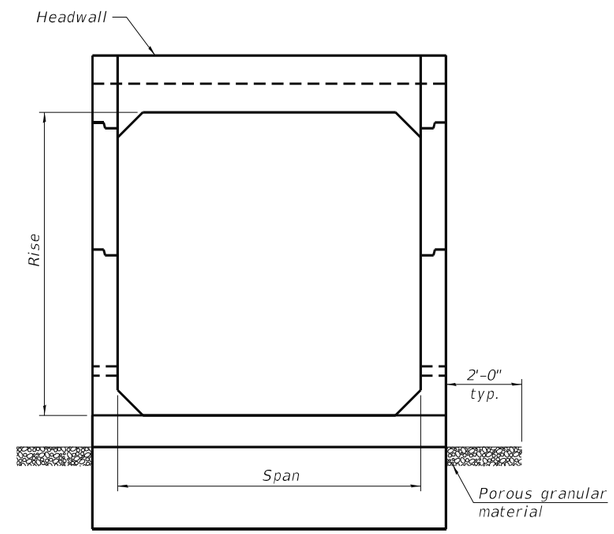

END VIEW

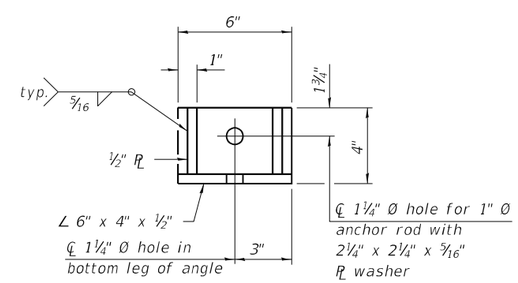

RESTRAINT ANGLE DETAIL

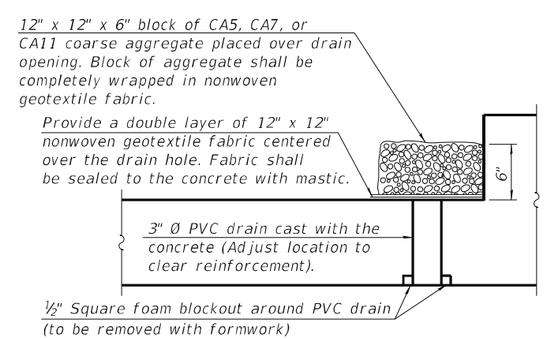

SECTION A-A

(All costs associated with furnishing and constructing the above drain detail will not be measured for payment but shall be included in the contract unit price for the associated work.)

GENERAL NOTES

Box Culvert End Sections shall be constructed according to the requirements of Section 540 of the Standard Specifications except as modified herein. This work will be measured for payment as each, with each end of each culvert being one each. End sections will be paid for at the contract unit price per each for Box Culvert End Sections of the culvert number specified.

Typical box section dimensions, materials, and reinforcement details for Box Culvert End Sections shall be according to the requirements of ASTM C 1577 as required for the design of the portion of the culvert within the limits of Precast Concrete Box Culverts except as modified herein.

Number of segments shown in Elevation is for example only. Length and number of precast box sections required to construct Box Culvert End Sections shall be determined by the Contractor.

1" Ø anchor rods for the culvert ties shall conform to the requirements of ASTM F1554, Grade 105. Structural steel for tie plate and restraint angle shall conform to the requirements of Article 1006.04 of the Standard Specifications. All components of the culvert tie detail shall be galvanized according to the requirements of AASHTO M 111 or M 232 as applicable. 2¼" x 2¼" x 5/16" plate washers shall be provided under each nut required for the anchor rods. Anchor rods connecting precast sections shall be brought to a snug tight condition followed by an additional ½ turn on one of the nuts for anchor rods installed in the walls. Match marks shall be provided on the bolt and nut to verify relative rotation between the bolt and the nut. Holes in the walls for the culvert tie assembly may be drilled using core bits in lieu of using formed holes.

All costs associated with furnishing and installing or constructing the toewall and culvert ties will not be measured for payment but shall be included in the contract unit price for Box Culvert End Sections of the culvert number specified.

Drain holes shall conform to the requirements of Article 503.11 of the Standard Specifications unless noted otherwise.

Nonwoven geotextile fabric shall conform to the requirements of Article 1080.01. The minimum weight of the fabric shall be 6 oz. / sq. yd..

For end sections with traversable pipe grate systems, see grate detail sheet for required modifications.

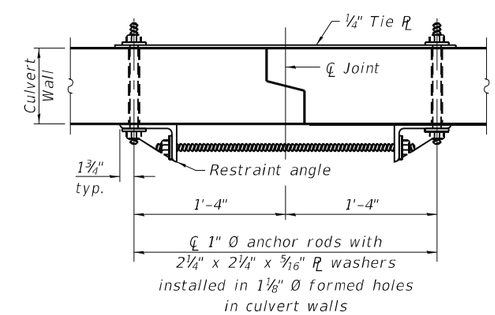

SECTION B-B

(Showing end section tie details)

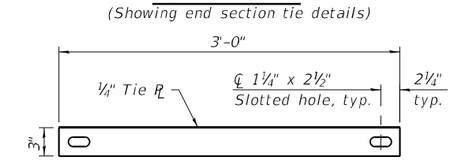

TIE PLATE DETAIL

(Sheet 1 of 2)

LIN ENGINEERING, LTD. Consulting Engineers Springfield, Illinois	USER NAME = Mike Haley	DESIGNED - AGJ	REVISED -	STATE OF ILLINOIS DEPARTMENT OF TRANSPORTATION	SINGLE CELL PRECAST BOX CULVERT TAPERED END SECTIONS STRUCTURE NO. 016-8352	F.A.U. RTE.	SECTION	COUNTY	TOTAL SHEETS / SHEET NO.
		CHECKED - VPT	REVISED -			3578	2019-001-R	COOK	255 / 172
	PLOT TIME = 11:15:23 AM	DRAWN - AGJ	REVISED -					CONTRACT NO. 62H82	
	PLOT DATE = 12/23/2022	CHECKED - VPT	REVISED -		SHEET 3 OF 5 SHEETS		ILLINOIS	FED. AID PROJECT	

MODEL: Default
FILE NAME: E:\1902\Struct\Final Design\Design Plans\CADD_Sheets\0168352-D162H82-003-End Section 1.dgn
12/23/2022 11:15:23 AM

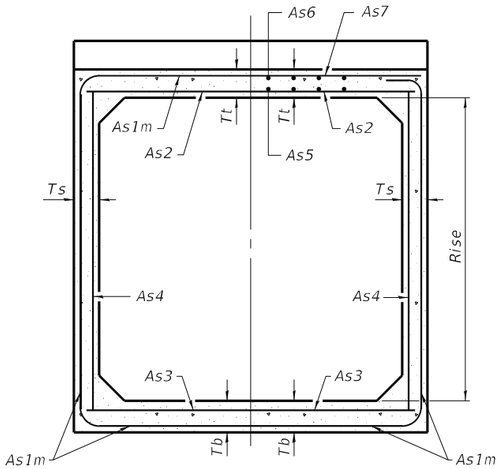

(Design Earth Cover ≥ 2 ft) (Design Earth Cover < 2 ft)

SECTION C-C

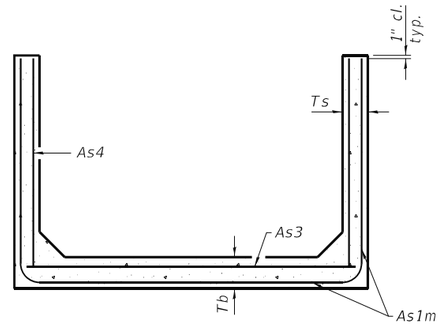

SECTION D-D

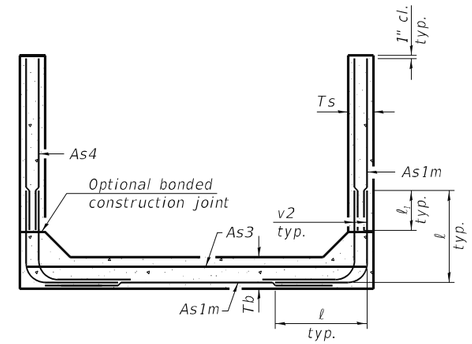

ALTERNATE SECTION D-D

As1m REINFORCEMENT

(in.²/ ft)

Ts (in.) \ Rise (ft)	2	3	4	5	6	7	8	9	10	11	12
4	0.19	0.17									
5	0.26	0.21	0.18								
6	0.22	0.26	0.23	0.22							
7	0.25	0.33	0.59	0.27	0.28						
8	0.40	0.35	0.43	0.39	0.36	0.34	0.40				
9	0.44	0.39	0.35	0.43	0.40	0.37	0.36	0.48			
10	0.48	0.42	0.38	0.47	0.44	0.41	0.38	0.42	0.56		
11	0.52	0.45	0.54	0.50	0.46	0.44	0.41	0.46	0.50	0.65	
12	0.55	0.49	0.58	0.54	0.50	0.48	0.45	0.46	0.46	0.61	0.75

(As1m reinforcement based upon welded wire reinforcement conforming to AASHTO M 55 or M 221).

ℓ1 DIMENSION

#3 bar = 2'-0"
#4 bar = 2'-8"
#5 bar = 3'-4"
#6 bar = 3'-11"

Notes:

Alternate Section D-D is provided to allow the Contractor the option of casting the bottom slab of the end section first followed by construction of the sidewalls using conventional forming methods. Shop drawings that detail slab thickness and reinforcement layout shall be submitted to the Engineer for review and approval when using Alternate Section D-D.

The size and spacing of the v2 bars shall provide a minimum reinforcement area along each face of the walls (in.²/ft.) equal to 1.10*(As1m). v2 bars may consist of #3 thru #6 size reinforcement bars and the longitudinal spacing shall not exceed the lesser of the wall thickness or 8 inches.

Bonded construction joints shall be prepared according to Article 503.09 of the Standard Specifications.

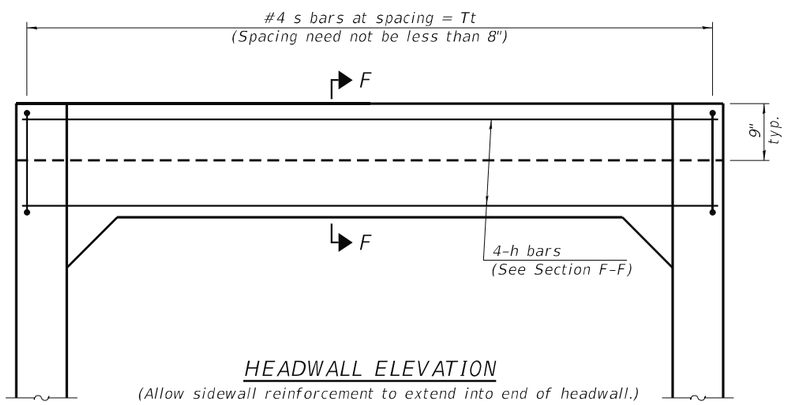

HEADWALL ELEVATION

(Allow sidewall reinforcement to extend into end of headwall.)

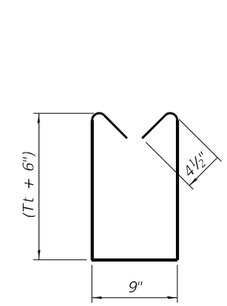

BAR s

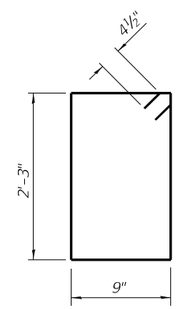

BAR s1

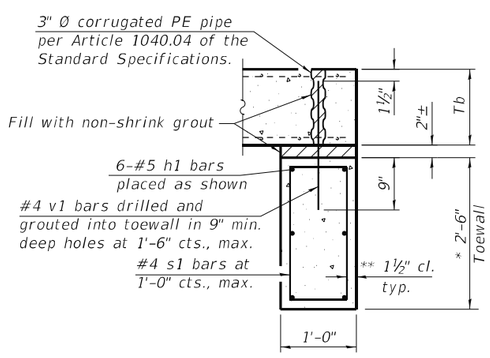

SECTION E-E

TOEWALL CONSTRUCTION SEQUENCE

1. Perform excavation and construct toewall.
2. Backfill according to the applicable paragraphs of Article 502.10 of the Standard Specifications and place bedding for precast box culvert end sections.
3. Set precast box culvert end section.
4. Drill and epoxy grout reinforcement in toewall in accordance with Section 584 of the Standard Specifications.
5. Pressure grout voids using non-shrink grout conforming to Section 1024 of the Standard Specifications.

* The Contractor may furnish a precast or cast-in-place toewall. The Contractor shall be responsible for the strength and stability of the precast toewall during handling. Additional lifting points may be required depending upon the length of the toewall or the Contractor may need to modify the design of the toewall for the proposed handling the method.

** If soil conditions permit, the sides of the toewall may be poured directly against the soil. The clear cover on the sides of the toewall shall be increased to 3" by increasing the thickness of the toewall.

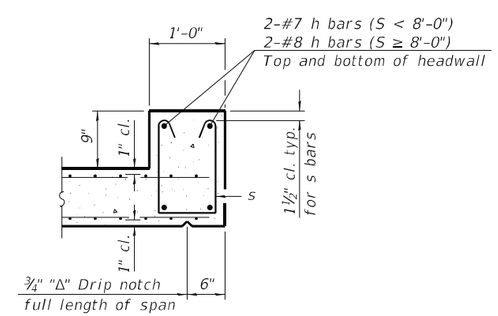

SECTION F-F

SCB-TES 2-17-2017

(Sheet 2 of 2)

LIN ENGINEERING, LTD. Consulting Engineers Springfield, Illinois	USER NAME = Mike Haley	DESIGNED - AGJ	REVISED -	STATE OF ILLINOIS DEPARTMENT OF TRANSPORTATION	SINGLE CELL PRECAST BOX CULVERT TAPERED END SECTIONS STRUCTURE NO. 016-8352	F.A.U. RTE. 3578	SECTION 2019-001-R	COUNTY COOK	TOTAL SHEETS 255 / SHEET NO. 173
		CHECKED - VPT	REVISED -						
	PLOT TIME = 11:15:23 AM	DRAWN - AGJ	REVISED -		SHEET 4 OF 5 SHEETS			CONTRACT NO. 62H82	
	PLOT DATE = 12/23/2022	CHECKED - VPT	REVISED -					ILLINOIS FED. AID PROJECT	

MODEL: Default
FILE NAME: E:\1902\Struct\Final Design\Design Plans\CADD_Sheets\0168352-D162H82-004-End Section 2.dgn
12/23/2022 11:15:23 AM

Wang Engineering
wangeng@wangeng.com
1145 N. Main Stree
Lombard/IL/60148
Telephone: 6309539928
Fax: 6309539938

BORING LOG CB-11

WEI Job No.: 411-05-01

Client: James J. Benes & Associates
Project: IL Route 7 from 131st Street to 135th Street
Location: Cook County, IL

Daum: NAVD 88
Elevation: 670.44 ft
North: 1815336.00 ft
East: 1118473.62 ft
Station: 120+02.2
Offset: 29.0' RT

Elevation (ft)	SOIL AND ROCK DESCRIPTION	Depth (ft)	Sample No.	SPT Values (blw/6 in)	Qu (tsf)	Moisture Content (%)
	12-inch thick, ASPHALT --PAVEMENT--					
669.4	Medium stiff to very stiff, black and brown SILTY CLAY, some gravel; damp --FILL-- --RDR 2--		1	3 5 5 3	2.50 P	19
			2	2 4 3 4	0.50 B	22
666.2 / 665.8	Brown, medium SAND; saturated	5				
	Very soft to medium stiff, black and brown SILTY CLAY, trace to some organic matter; damp --RDR 1--		3	2 1 2 3	0.82 B	44
			4	0 0 1 1	0.16 B	48
660.9 / 660.7	Brown, medium SAND; saturated	10				
	Medium stiff, gray CLAY to SILTY CLAY; damp --RDR 2--		5	0 2 3 2	< 0.25 P	53
			6	2 3 4	0.50 P	32
657.4	Stiff, gray SILTY CLAY, little gravel; damp --RDR 2--	15	7	3 4 6	1.43 B	20
653.7	Medium dense, brown SAND; saturated		8	3 5 6	1.39 B	19
652.4	Stiff, gray SILTY CLAY, trace gravel; damp --RDR 2--		9	2 3 4	1.15 B	19
650.4	Boring terminated at 20.00 ft	20				

GENERAL NOTES

Begin Drilling: 09-25-2019 Complete Drilling: 09-25-2019
Drilling Contractor: Wang Testing Services Drill Rig:
Driller: R&J Logger: I. Nenn Checked by: C. Marin
Drilling Method: 2.25" HSA, boring backfilled upon completion

WATER LEVEL DATA

While Drilling: 9.50 ft
At Completion of Drilling: DRY
Time After Drilling: NA
Depth to Water: NA

The stratification lines represent the approximate boundary between soil types; the actual transition may be gradual.

Wang Engineering
wangerg@wangeng.com
1145 N. Main Street
Lombard/IL/60148
Telephone: 6309539928
Fax: 6309539938

BORING LOG CB-12

WEI Job No.: 411-05-01

Client: James J. Benes & Associates
Project: IL Route 7 from 131st Street to 135th Street
Location: Cook County, IL

Datum: NAVD 88
Elevation: 670.59 ft
North: 1815409.20 ft
East: 1118490.90 ft
Station: 120+77.6
Offset: 25.0' RT

Elevation (ft)	SOIL AND ROCK DESCRIPTION	Depth (ft)	Sample No.	SPT Values (blw/6 in)	Qu (tsf)	Moisture Content (%)
	10-inch ASPHALT over 12-inch CONCRETE --PAVEMENT--					
668.8 / 668.3 / 667.8	Very stiff, brown and black SILTY CLAY LOAM, trace gravel; damp --FILL--		1	5 5 7 6	3.77 B	24
	Very stiff, black SILTY CLAY LOAM; damp to moist --BURIED TOPSOIL-- --RDR 2--	5				
	Stiff to hard, brown to gray SILTY CLAY, trace gravel; damp to moist --RDR 2--		2	3 3 5 6	NA	21
			3	2 3 6 8	7.38 B	19
			4	4 5 6 5	4.02 B	19
	--silt and sand lamiantion; wet--	10				
659.7	Gray GRAVELLY SAND; saturated		5	4 6 6 5	1.60 B	20
657.8	Stiff, gray SILTY CLAY LOAM, trace gravel; damp to saturated --saturated sand lenses-- --RDR 2--	15	6	3 5 5	1.97 B	14
655.1	Very stiff, gray CLAY to SILTY CLAY, trace gravel; moist --RDR 2--		7	3 4 5	2.05 B	21
652.6	Soft, gray CLAY LOAM; wet --saturated sand lenses-- --RDR 2--	20	8	2 2 3	0.49 B	16
650.1	Medium stiff to stiff, gray SILTY CLAY LOAM, trace gravel; moist to wet --RDR 2--		9	3 4 7	0.57 B	27
			10	4 6 9	1.07 B	17
646.3 / 645.6	Gray SAND; saturated	25				
	Boring terminated at 25.00 ft					
		30				
		35				
		40				

GENERAL NOTES

Begin Drilling: 09-25-2019 Complete Drilling: 09-25-2019
Drilling Contractor: Wang Testing Services Drill Rig:
Driller: K&A Logger: E. Yim Checked by: C. Marin
Drilling Method: 2.25" HSA, boring backfilled upon completion

WATER LEVEL DATA

While Drilling: 11.90 ft
At Completion of Drilling: DRY
Time After Drilling: NA
Depth to Water: NA

The stratification lines represent the approximate boundary between soil types; the actual transition may be gradual.

The boring logs represent point information. Presentation of this information in no way implies that subsurface conditions are the same at locations other than the exact location of the boring.

WANGENGINC 411050L.GPJ WANGENG.GDT 8/19/20

MODEL: Default
FILE NAME: E:\1902\Struct\Final Design\Design Plans\CADD_Sheets\0168352-D162H82-005-Boring Logs.dgn

LIN ENGINEERING, LTD.
Consulting Engineers
Springfield, Illinois

USER NAME = Mike Haley	DESIGNED - AGJ	REVISED -	
	CHECKED - VPT	REVISED -	
PLOT TIME = 11:15:25 AM	DRAWN - AGJ	REVISED -	
PLOT DATE = 12/23/2022	CHECKED - VPT	REVISED -	

STATE OF ILLINOIS
DEPARTMENT OF TRANSPORTATION

SOIL BORING LOGS
STRUCTURE NO. 016-8352
SHEET 5 OF 5 SHEETS

F.A.U. RTE.	SECTION	COUNTY	TOTAL SHEETS	SHEET NO.
3578	2019-001-R	COOK	255	174

CONTRACT NO. 62H82
ILLINOIS FED. AID PROJECT

12/23/2022 11:15:25 AM

Bench Mark: BM #8: Cut "□" in top NE corner of concrete traffic signal post foundation located at the SW corner of IL Rte. 7 and 131st St., near IL Rte. 7 Sta. 130+40 Lt. Elevation = 672.36 (NAVD88).

Exist. Str.: Existing S.N. 016-0898 is a C.I.P. concrete box culvert built in 1930, and extended in 1958 under Section 3113-15D-I. Existing structure is a 62'-10" long, 6'x5.7' & 12'x6' double box culvert. The existing structure will be partially removed, or abandoned in place and filled, and replaced with a C.I.P. triple box culvert. Stage construction will be utilized to maintain one lane of traffic in each direction and a left turn lane during construction. No Salvage.

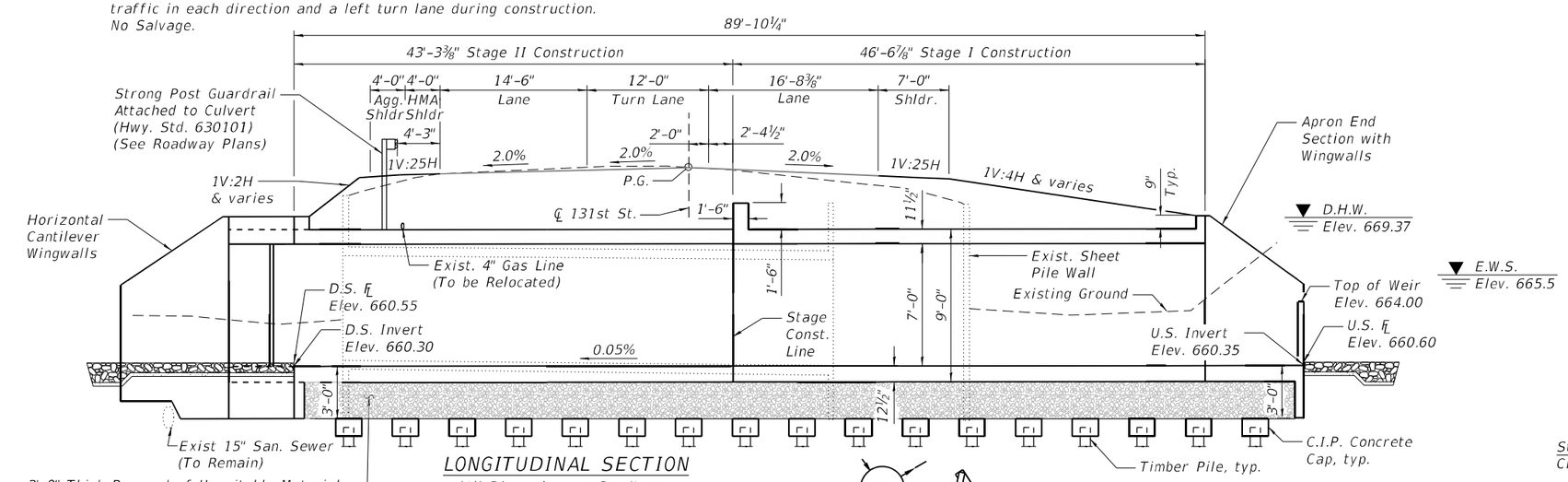

LONGITUDINAL SECTION

(All Dimensions at Rt. ∠'s to ℄ Roadway, at ℄ Structure)

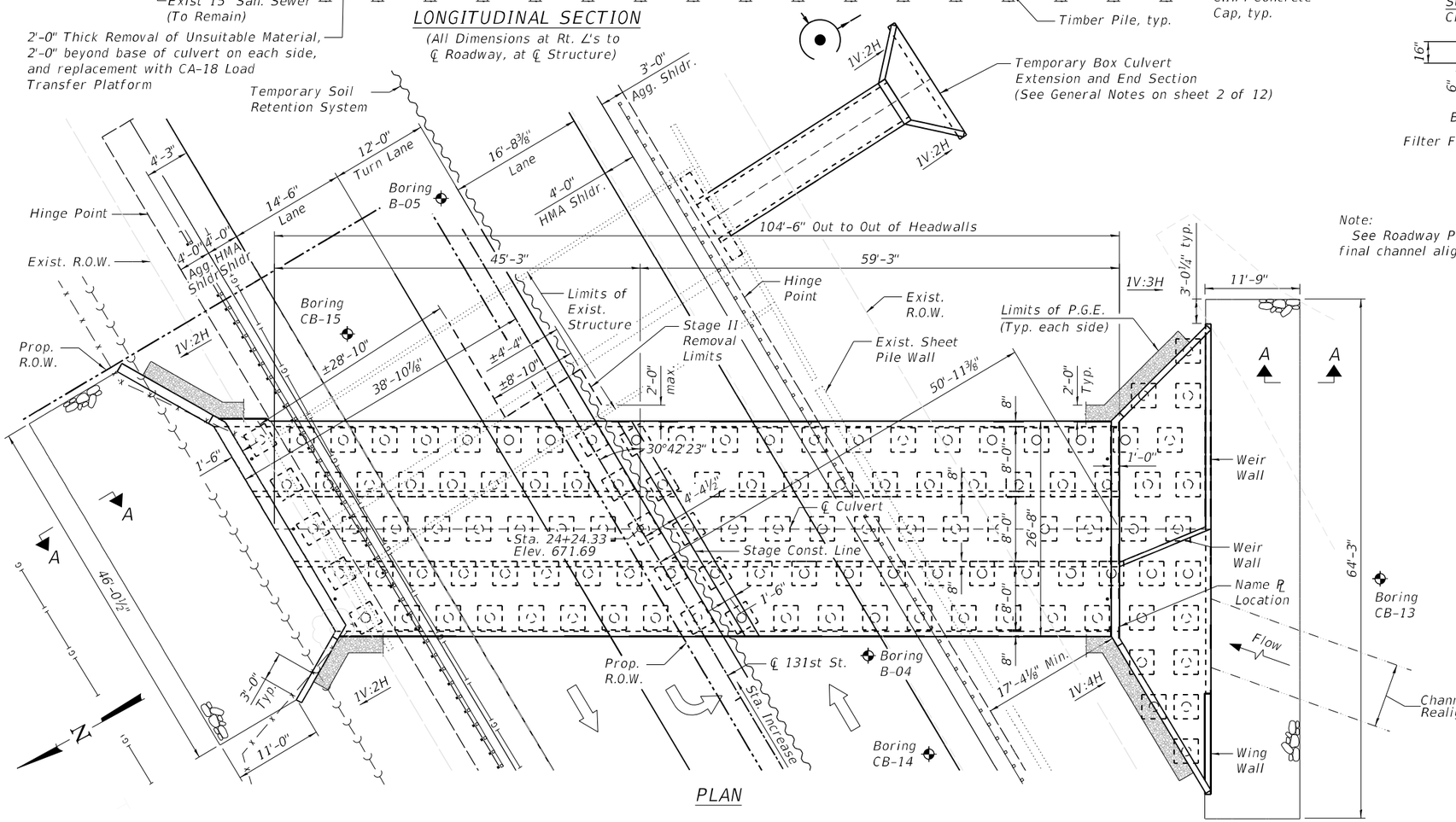

PLAN

Note:
See Roadway Plans for temporary and final channel alignment.

INDEX OF SHEETS

DESIGN SPECIFICATIONS

2020 AASHTO LRFD Bridge Design Specifications, 9th Edition

LOADING HL-93

Allow 50#/sq. ft. for future wearing surface.

DESIGN STRESSES

FIELD UNITS

f'c = 3,500 psi
fy = 60,000 psi (Reinforcement)

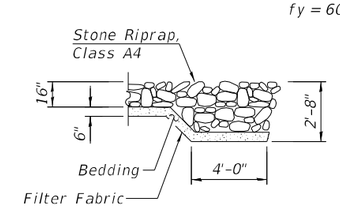

SECTION A-A

LICENSED STRUCTURAL ENGINEER
MICHAEL T. HALEY
081-005991
CHATHAM
STATE OF ILLINOIS

Michael T. Haley 12/22/2022
Michael T. Haley Date
Licensed Structural Engineer
State of Illinois No. 081-005991
Expires 11/30/2024

APPROVED
For Structural Adequacy Only
Engineer of Bridges & Structures

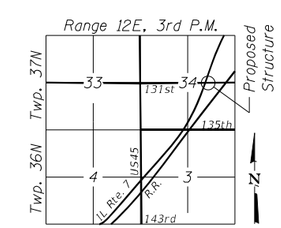

LOCATION SKETCH

GENERAL PLAN AND ELEVATION
131st ST. OVER MILL CREEK
F.A.U. RTE. 3578 SEC. 2019-001-R
COOK COUNTY
STATION 24+24.33
S.N. 016-0933

LIN ENGINEERING, LTD. Consulting Engineers Springfield, Illinois	USER NAME = $USER$	DESIGNED - NB	REVISED -	STATE OF ILLINOIS DEPARTMENT OF TRANSPORTATION	
		CHECKED - MTH	REVISED -		
	PLOT TIME = 2:52:08 PM	DRAWN - AJF	REVISED -		
	PLOT DATE = 5/5/2023	CHECKED - MTH	REVISED -		

SHEET 1 OF 12 SHEETS

F.A.U. RTE.	SECTION	COUNTY	TOTAL SHEETS	SHEET NO.
3578	2019-001-R	COOK	255	175
		CONTRACT NO. 62H82		
		ILLINOIS FED. AID PROJECT		

MODEL: Default
FILE NAME: E:\1902\Struct\SN 016-0933\Final Design\CADD_Sheets\0160933-62H82-001-GPE.dgn
5/5/2023 2:52:08 PM

GENERAL NOTES

Layout of the slope protection system may be varied to suit ground conditions in the field as directed by the Engineer.

Precast alternate is not allowed.

The limits and quantities of removal and replacement of unsuitable material for structures shown are based on boring data and may be modified by the District Geotechnical and Field Engineers for variable subsurface conditions encountered in the field.

Temporary Box Culvert Extension and End Section shown are one option that may be used for water diversion during construction to provide a minimum opening area of 19.6 sq. ft. in order to accommodate a flow rate of 127 cfs. Water diversion is the responsibility of the Contractor and shall be submitted to the Engineer for approval prior to construction.

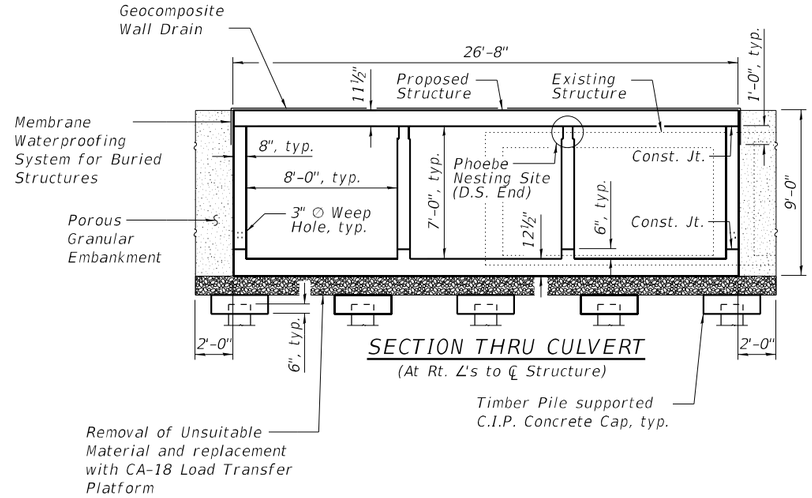

SECTION THRU CULVERT

(At Rt. ∠'s to ℄ Structure)

WATERWAY INFORMATION

Drainage Area = 5.92 sq. mi. Low Grade Elev. = 671.1 @ Sta. 23+34									
Flood	Freq. Yr.	Q C.F.S.	Opening Sq. Ft. Exist.	Opening Sq. Ft. Prop.	Nat. H.W.E.	Head - Ft. Exist.	Head - Ft. Prop.	Headwater El. Exist.	Headwater El. Prop.
	10	280	106	168	668.17	0	0	668.07	667.99
Design	50	516	106	168	669.37	0.5	0	669.87	669.40
Base	100	706	106	168	670.25	1.0	0.2	671.26	670.47
Max. Calc.	100	706	106	168	670.11	0.9	0.4	671.06	670.47

10-Yr. Outlet Velocity from Exist. Struct. = 2.72 fps
10-Yr. Outlet Velocity from Prop. Struct. = 1.67 fps

Note:
Geocomposite Wall Drain shall be according to Section 591 of the Standard Specifications, except that concrete nails shall not be used in areas where it overlaps Membrane Waterproofing System for Buried Structures.

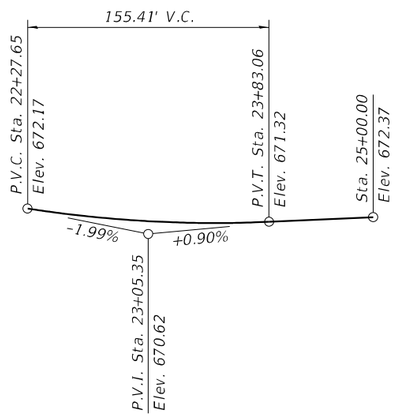

PROFILE GRADE

Along ℄ Proposed 131st St.

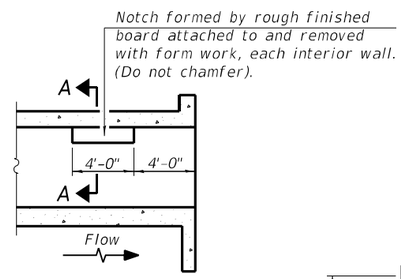

LONGITUDINAL SECTION

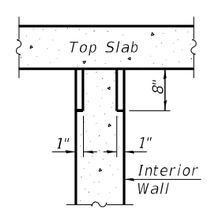

SECTION A-A

PHOEBE NESTING SITE DETAILS

(Downstream End Only)

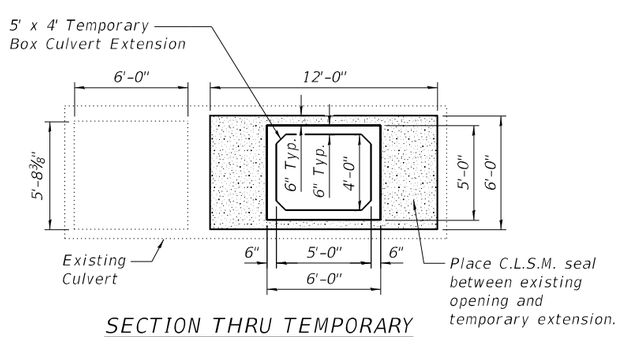

SECTION THRU TEMPORARY CULVERT EXTENSION

(At Rt. ∠'s to ℄ Structure)

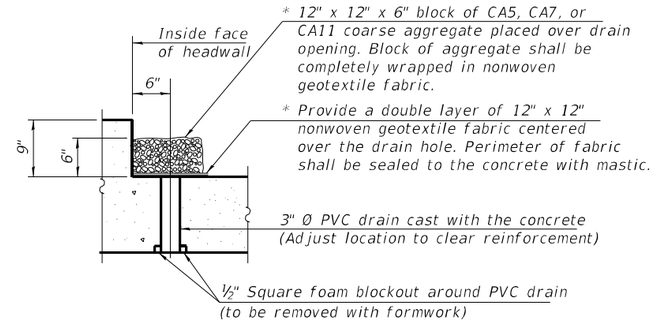

DRAIN DETAIL

(All costs associated with furnishing and constructing the above drain detail will not be measured for payment but shall be included in the contract unit price for the associated work.)

* Nonwoven geotextile fabric shall conform to the requirements of Article 1080.01 of the Standard Specifications. The minimum weight of the fabric shall be 6 ounces per square yard.

TOTAL BILL OF MATERIAL

ITEM	UNIT	TOTAL
Porous Granular Embankment	Cu. Yd.	171
Stone Riprap, Class A4	Sq. Yd.	176
Filter Fabric	Sq. Yd.	176
Removal of Existing Structures No. 5	Each	1
Removal and Disposal of Unsuitable Material for Structures	Cu. Yd.	280
Concrete Structures	Cu. Yd.	38.0
Reinforcement Bars	Pound	71,170
Bar Splicers	Each	136
Furnishing Untreated Piles up to 30 feet	Foot	2,938
Driving Piles	Foot	2,938
Test Pile Timber	Each	1
Name Plates	Each	1
Temporary Soil Retention System	Sq. Ft.	980
Concrete Box Culverts	Cu. Yd.	320.9
Membrane Waterproofing System for Buried Structures	Sq. Yd.	346
Geocomposite Wall Drain	Sq. Yd.	346
Rock Fill - Foundation	Cu. Yd.	280

STATION 24+24.33
BUILT 202_ BY
STATE OF ILLINOIS
F.A.U. RT. 3578 SEC. 2019-001-R
LOADING HL-93
STR. NO. 016-0933

NAME PLATE

See Std. 515001

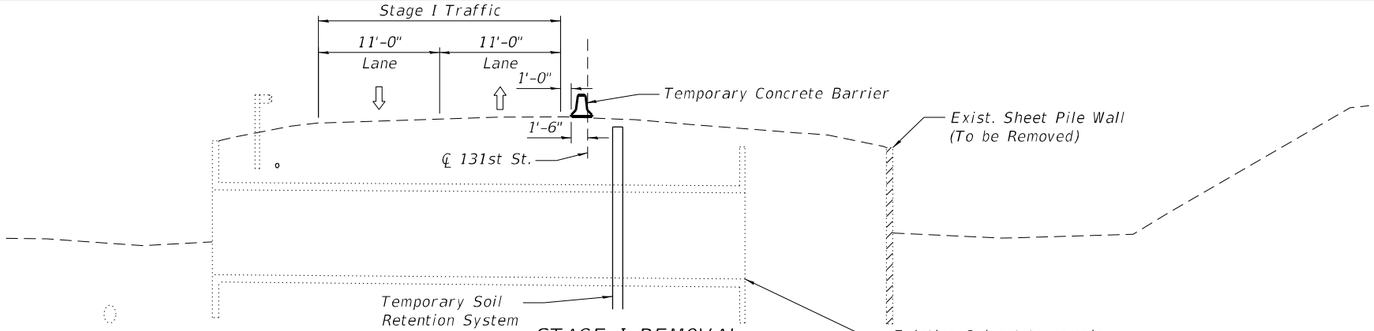

STAGE I REMOVAL

(Dimensions at Rt. ∠'s to ℄ Roadway, at ℄ Structure)

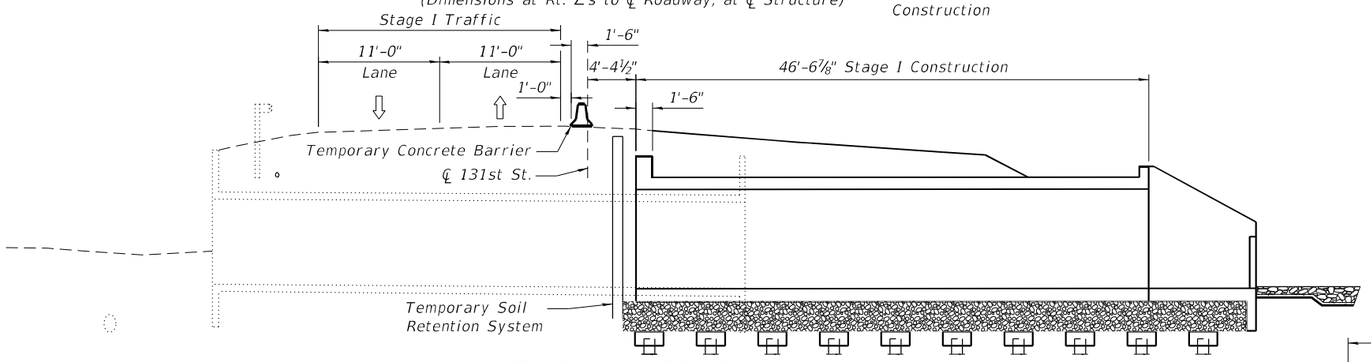

STAGE I CONSTRUCTION

(Dimensions at Rt. ∠'s to ℄ Roadway, at ℄ Structure)

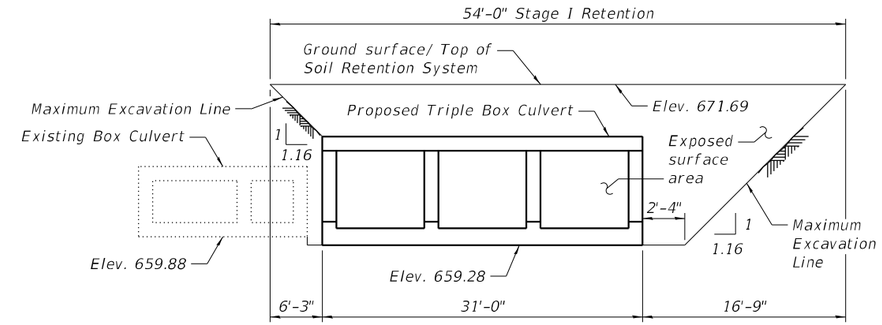

STAGE I TEMPORARY SOIL RETENTION SYSTEM

(Looking South)

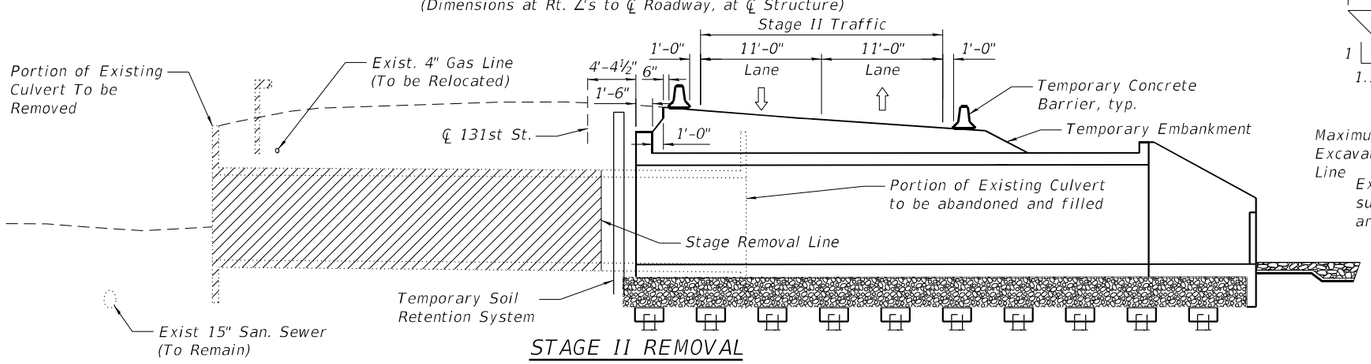

STAGE II REMOVAL

(Dimensions at Rt. ∠'s to ℄ Roadway, at ℄ Structure)

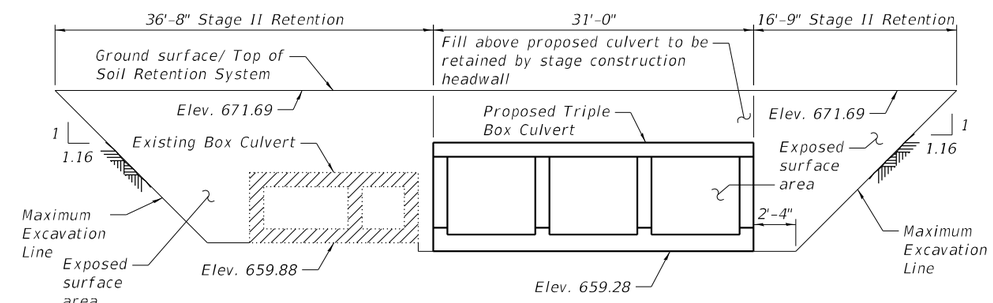

STAGE II TEMPORARY SOIL RETENTION SYSTEM

(Looking South)

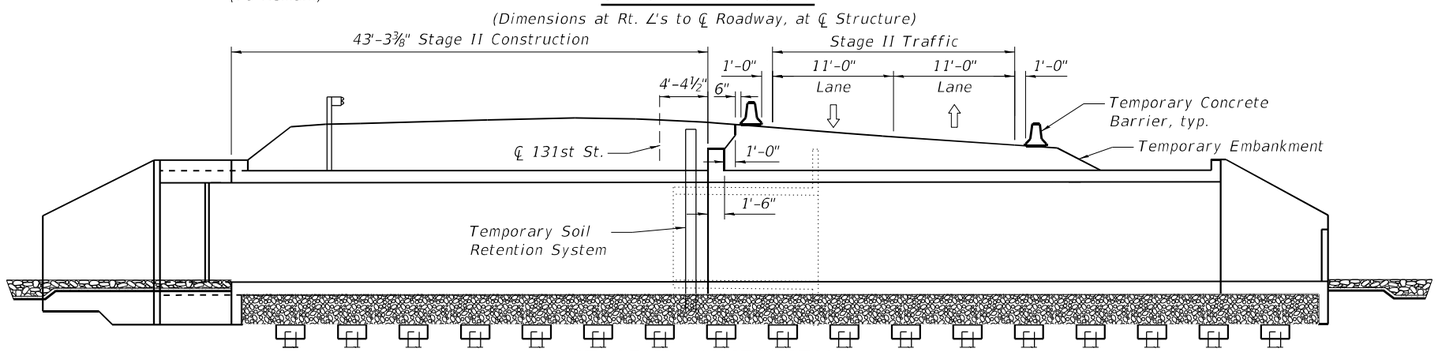

STAGE II CONSTRUCTION

(Dimensions at Rt. ∠'s to ℄ Roadway, at ℄ Structure)

Notes:

A cantilevered sheet piling design does not appear feasible and additional members or other retention systems may be necessary. The Contractor shall submit a temporary soil retention system design including plan details and calculations for review and acceptance by the Engineer.

Hatched areas indicate Removal of Existing Structures.

All staging sections are looking East.

See roadway plans for quantity of Temporary Concrete Barrier.

During Stage II Removal, the portion of the existing culvert to be removed near the stage line shall be limited to 2'-0" from the limits of the proposed culvert to ensure the structural adequacy of the existing structure to support Stage II Traffic.

MODEL: Default
FILE NAME: E:\1902\Struct\SN 016-0933\Final Design\CADD_Sheets\0160933-62H82-003-StageConstructionDetails.dgn
5/5/2023 2:52:47 PM

LIN ENGINEERING, LTD. Consulting Engineers Springfield, Illinois	USER NAME = $USER$	DESIGNED - NB	REVISED -	STATE OF ILLINOIS DEPARTMENT OF TRANSPORTATION
		CHECKED - MTH	REVISED -	
	PLOT TIME = 2:52:47 PM	DRAWN - AJF	REVISED -	
	PLOT DATE = 5/5/2023	CHECKED - MTH	REVISED -	

STAGE CONSTRUCTION DETAILS
STRUCTURE NO. 016–0933

SHEET 3 OF 12 SHEETS

F.A.U. RTE.	SECTION	COUNTY	TOTAL SHEETS	SHEET NO.
3578	2019-001-R	COOK	255	177
		CONTRACT NO. 62H82		
		ILLINOIS FED. AID PROJECT		

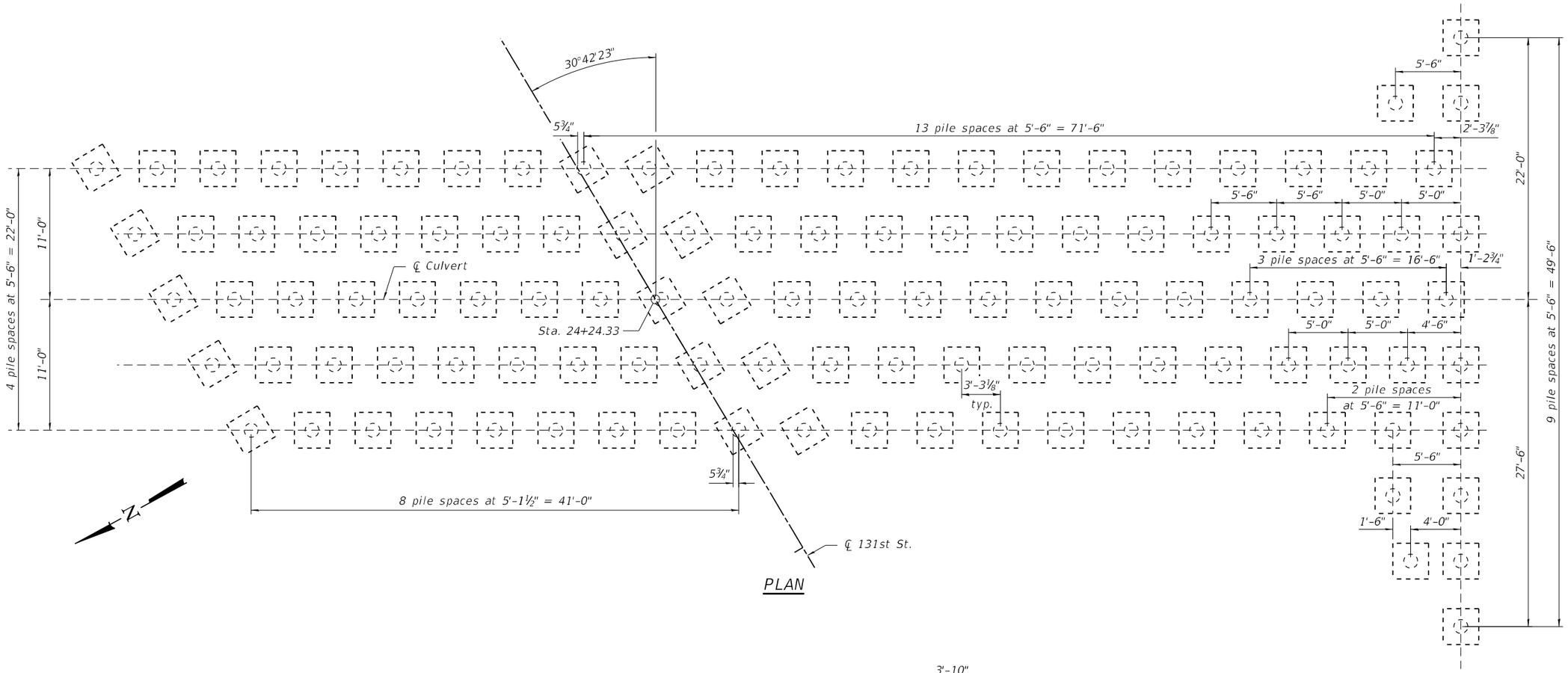

PLAN

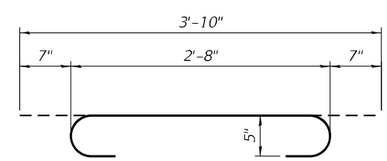

BAR t

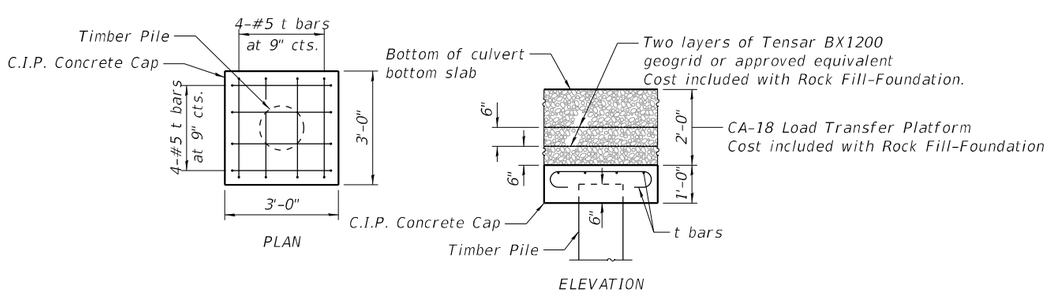

LOAD TRANSFER PLATFORM DETAIL

PILE DATA

Type: Untreated Timber
Nominal Required Bearing: 120 kips
Factored Resistance Available: 66 kips
Est. Length: 26 feet
No. Production Piles: 113
No. Test Piles: 1

LOAD TRANSFER PLATFORM BILL OF MATERIAL

Bar	No.	Size	Length	Shape
t	912	#5	3'-10"	
Furnishing Untreated Piles up to 30 feet			Foot	2,938
Driving Piles			Foot	2,938
Test Pile Timber			Each	1
Concrete Structures			Cu. Yd.	38.0
Reinforcement Bars			Pound	3,650
Rock Fill-Foundation			Cu. Yd.	280

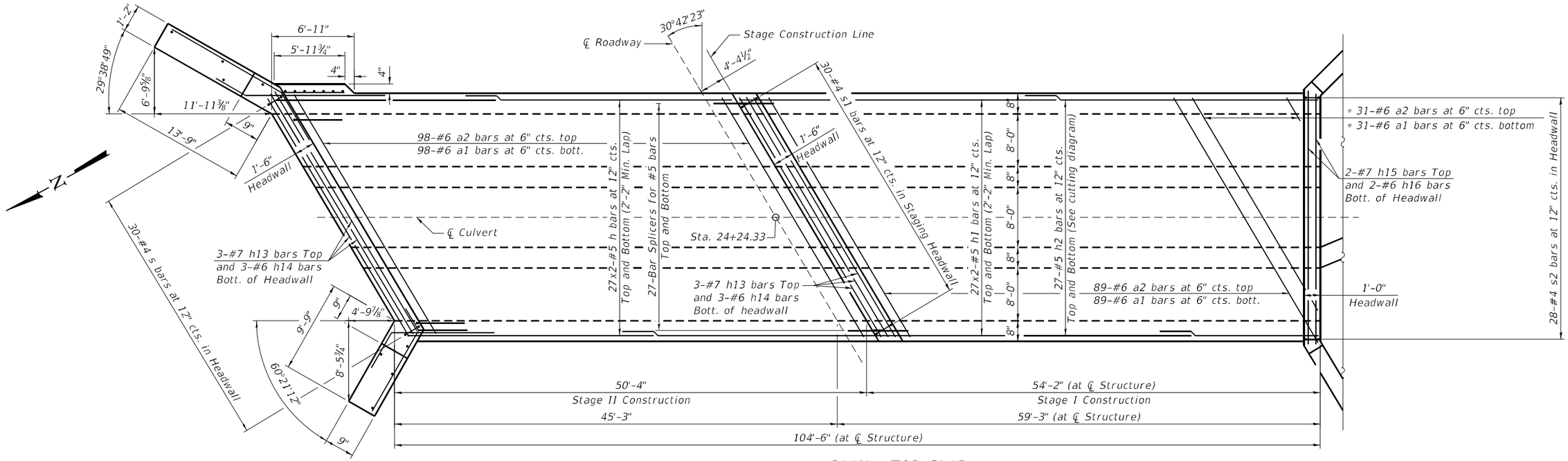

PLAN - TOP SLAB

* Order a1 and a2 bars full length.
Cut bars for top slab and use
remainder in bottom slab.

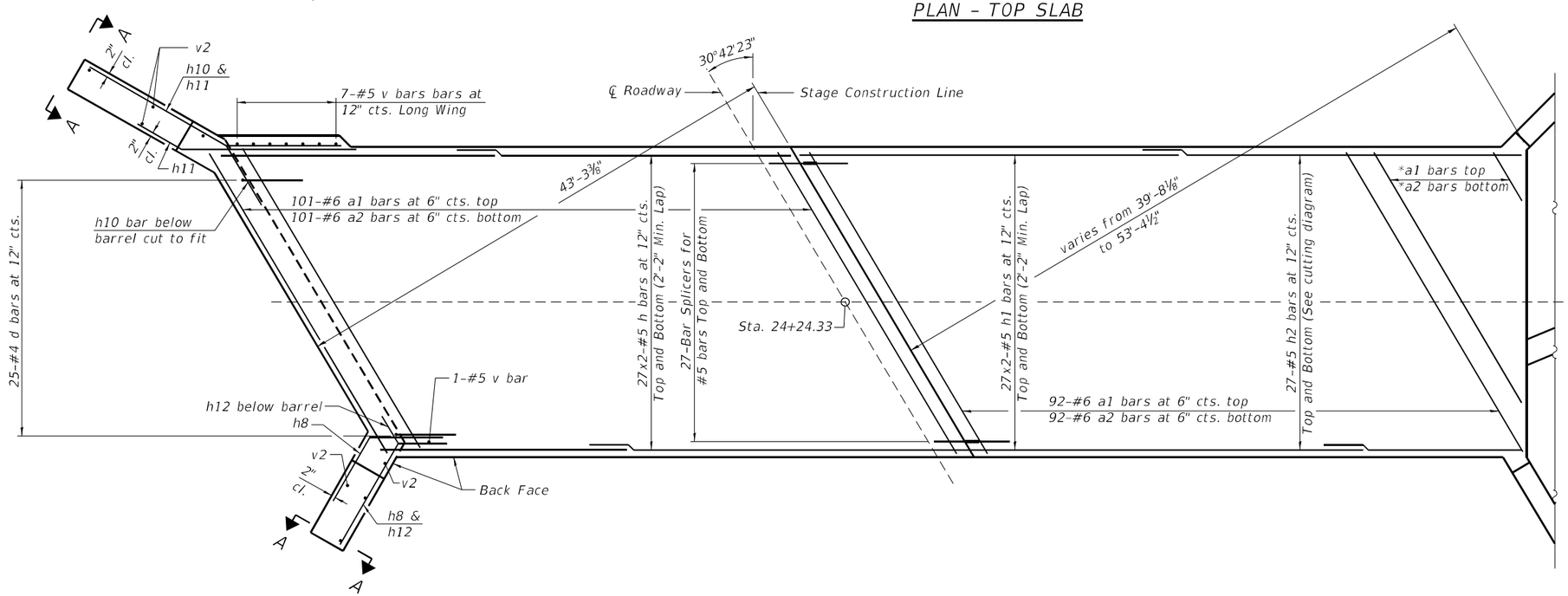

PLAN - BOTTOM SLAB

Notes:
A distance of half the length of the wingwall but not less than six feet of the barrel shall be poured monolithically with the wingwalls.
Bars indicated thus 12 x 4-#5 etc. indicates 12 lines of bars with 4 lengths per line.
See Sheet 6 of 12 for Section A-A.

(Sheet 1 of 4)

MODEL: Default
FILE NAME: E:\1902\Struct\SN 016-0933\Final Design\CADD_Sheets\0160933-62H82-005-CulvertDetails.dgn
5/5/2023 2:53:22 PM

LIN ENGINEERING, LTD. Consulting Engineers Springfield, Illinois	USER NAME = $USER$	DESIGNED - NB	REVISED -	STATE OF ILLINOIS DEPARTMENT OF TRANSPORTATION	CULVERT DETAILS STRUCTURE NO. 016-0933
		CHECKED - MTH	REVISED -		
	PLOT TIME = 2:53:22 PM	DRAWN - AJF	REVISED -		
	PLOT DATE = 5/5/2023	CHECKED - MTH	REVISED -		SHEET 5 OF 12 SHEETS

F.A.U. RTE.	SECTION	COUNTY	TOTAL SHEETS	SHEET NO.
3578	2019-001-R	COOK	255	179
		CONTRACT NO. 62H82		
		ILLINOIS FED. AID PROJECT		

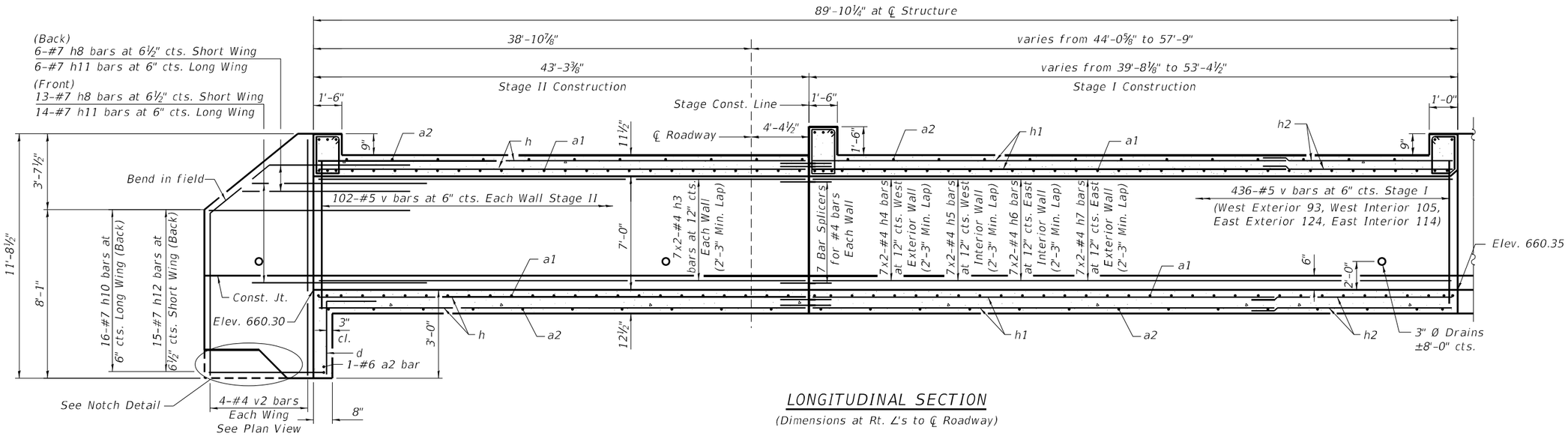

LONGITUDINAL SECTION

(Dimensions at Rt. ∠'s to ℄ Roadway)

*Measured along wingwall

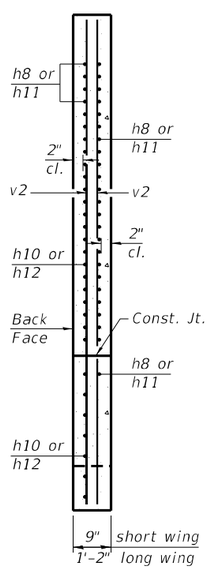

SECTION A-A

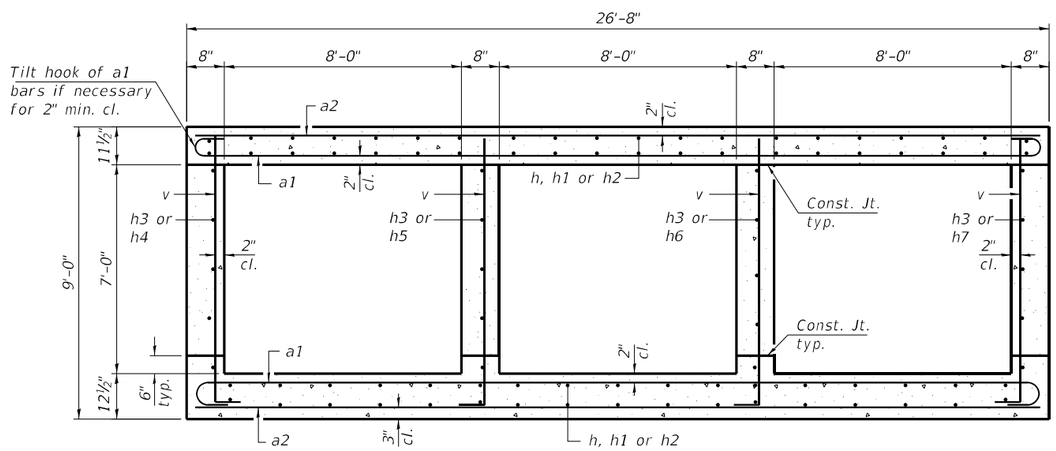

SECTION THRU BARREL

(Looking North)

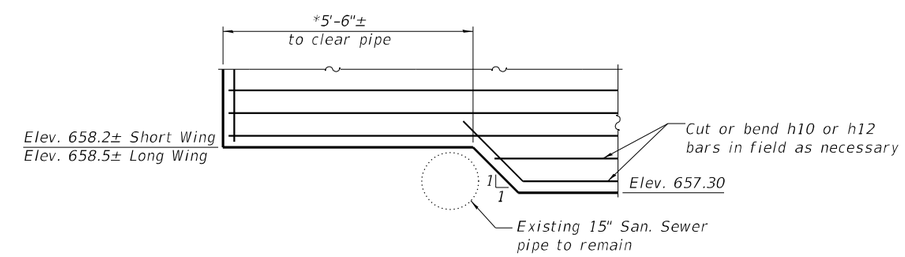

NOTCH DETAIL

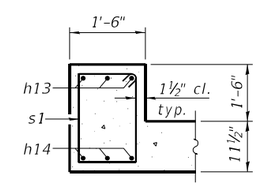

SECTION THRU STAGING HEADWALL

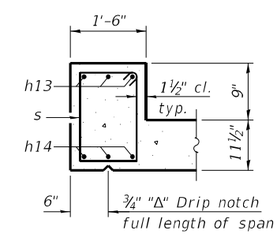

DOWNSTREAM

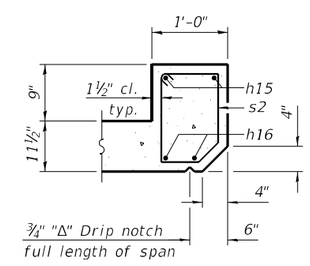

UPSTREAM

SECTION THRU HEADWALL

(Sheet 2 of 4)

MODEL: Default
FILE NAME: E:\1902\Struct\SN 016-0933\Final Design\CADD_Sheets\0160933-62H82-006-CulvertDetails.dgn

LIN ENGINEERING, LTD. Consulting Engineers Springfield, Illinois	USER NAME = $USER$	DESIGNED - NB	REVISED -	STATE OF ILLINOIS DEPARTMENT OF TRANSPORTATION	CULVERT DETAILS STRUCTURE NO. 016–0933
		CHECKED - MTH	REVISED -		
	PLOT TIME = 2:53:38 PM	DRAWN - AJF	REVISED -		
	PLOT DATE = 5/5/2023	CHECKED - MTH	REVISED -		SHEET 6 OF 12 SHEETS

F.A.U. RTE.	SECTION	COUNTY	TOTAL SHEETS	SHEET NO.
3578	2019-001-R	COOK	255	180
		CONTRACT NO. 62H82		
		ILLINOIS FED. AID PROJECT		

5/5/2023 2:53:38 PM

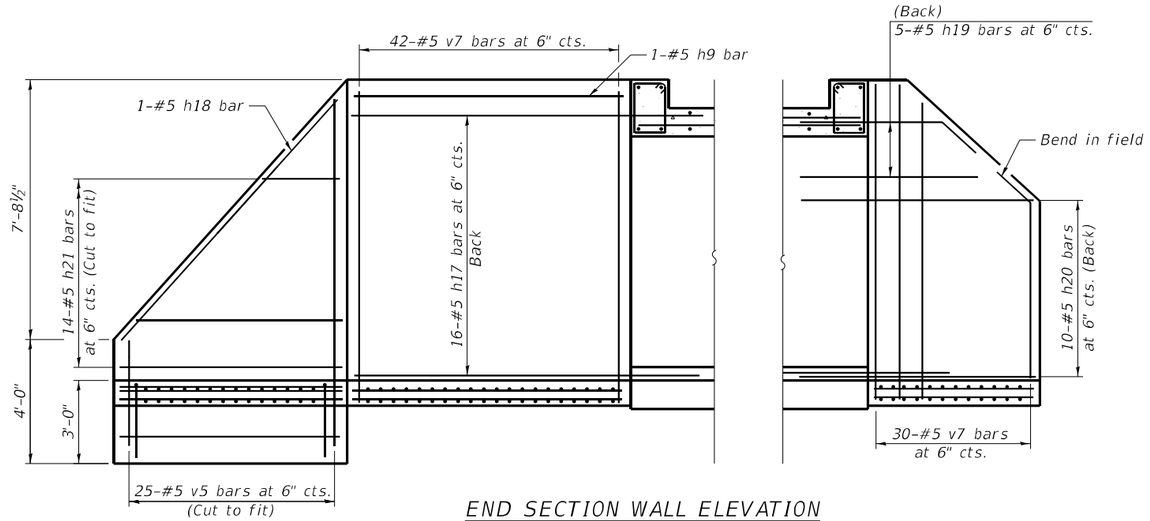

END SECTION WALL ELEVATION
(Unfolded view)

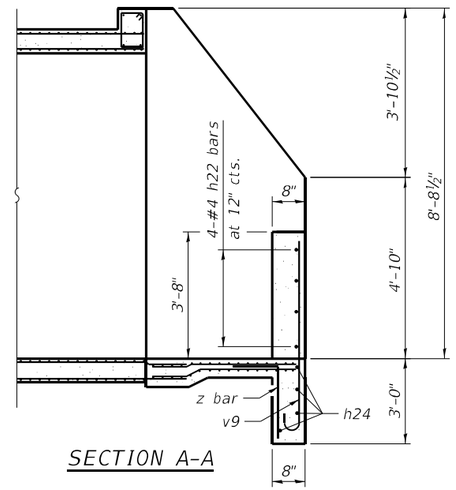

SECTION A-A

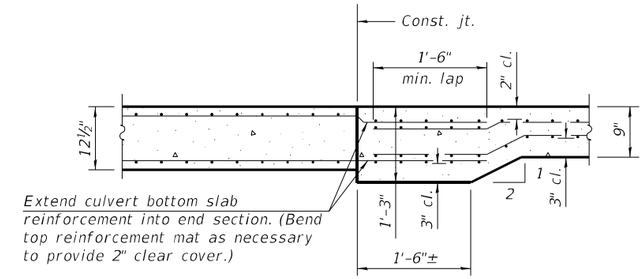

SECTION B-B
(Bottom slab)

MINIMUM BAR LAP
#4 bar = 1'-9"
#5 bar = 2'-2"

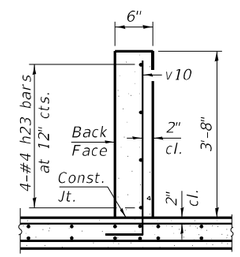

SECTION D-D

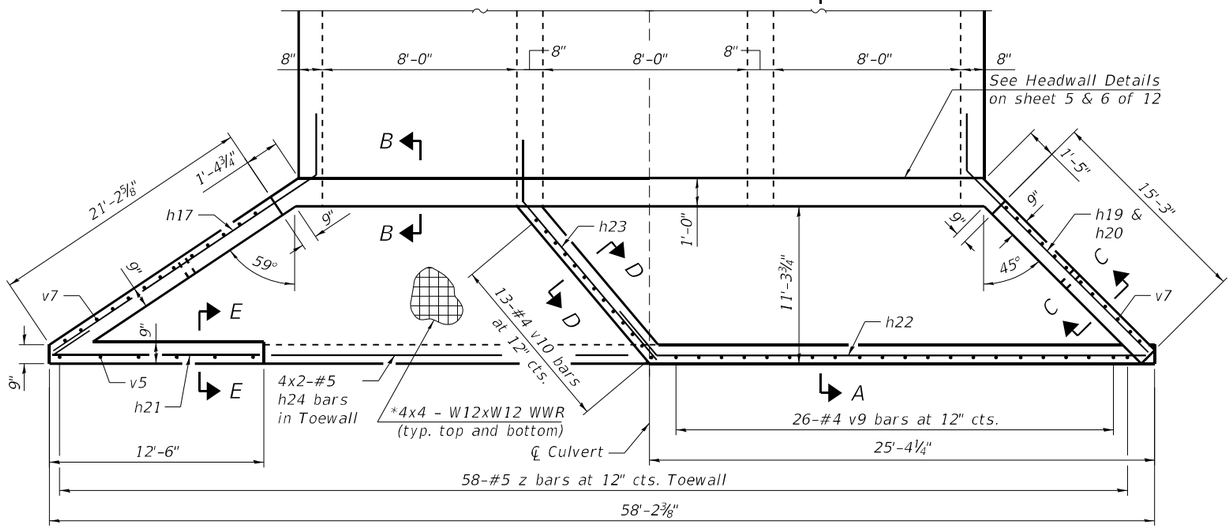

PLAN

*Cost included with Concrete Box Culvert

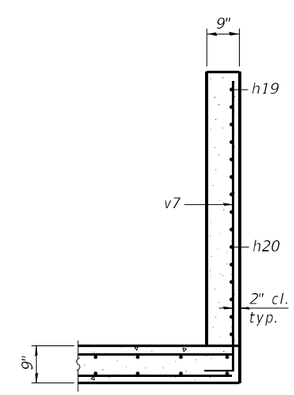

SECTION C-C

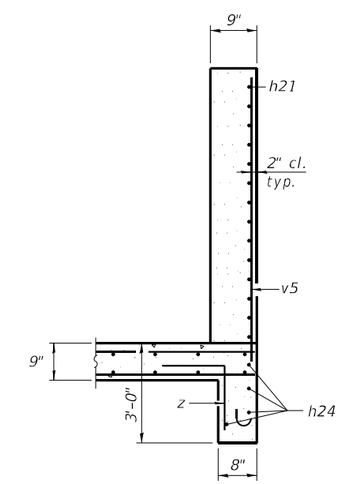

SECTION E-E

(Sheet 3 of 4)

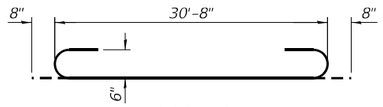

BAR a1

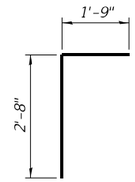

BAR d

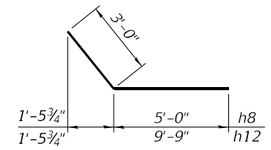

BARS h8 & h12

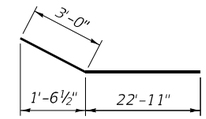

BAR h17

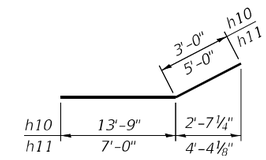

BARS h10 & h11

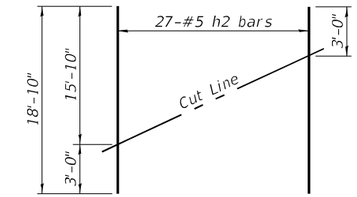

FIELD CUTTING DIAGRAM

Order h2 full length. Cut as shown and use remainder of bars in opposite face of slab.

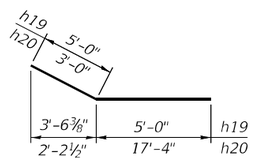

BARS h19 & h20

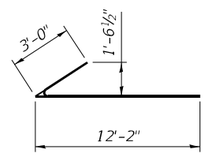

BAR h21

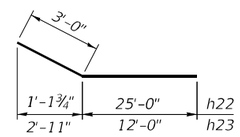

BARS h22 & h23

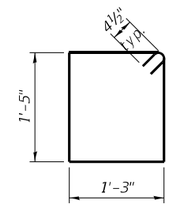

BAR s

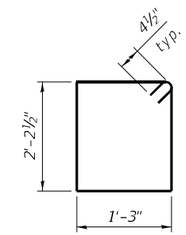

BAR s1

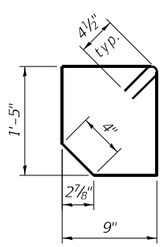

BAR s2

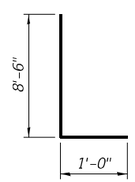

BAR v

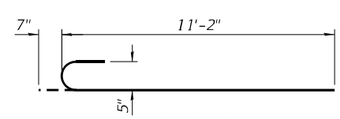

BAR v5

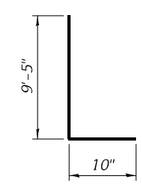

BAR v7

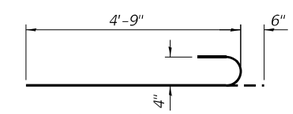

BAR v9

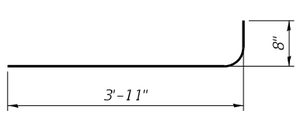

BAR v10

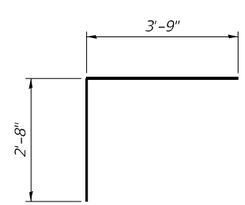

BAR z

BILL OF MATERIAL

Bar	No.	Size	Length	Shape
a1	411	#6	32'-0"	
a2	412	#6	30'-8"	
d	25	#4	4'-5"	
h	216	#5	26'-3"	
h1	216	#5	23'-9"	
h2	54	#5	18'-10"	
h3	56	#4	26'-3"	
h4	14	#4	24'-3"	
h5	14	#4	26'-10"	
h6	14	#4	29'-5"	
h7	14	#4	32'-0"	
h8	19	#7	8'-0"	
h9	1	#5	21'-0"	
h10	16	#7	16'-9"	
h11	20	#7	12'-0"	
h12	15	#7	12'-9"	
h13	6	#7	30'-8"	
h14	6	#6	30'-8"	
h15	2	#7	26'-4"	
h16	2	#6	26'-4"	
h17	16	#5	25'-11"	
h18	1	#5	7'-4"	
h19	5	#5	10'-0"	
h20	10	#5	20'-4"	
h21	14	#5	15'-2"	
h22	4	#4	28'-0"	
h23	4	#4	15'-0"	
h24	8	#5	30'-2"	
s	30	#4	6'-1"	
s1	30	#4	7'-8"	
s2	28	#4	4'-8"	
v	852	#5	9'-6"	
v2	8	#4	11'-4"	
v5	25	#5	11'-9"	
v7	72	#5	10'-3"	
v9	26	#4	5'-3"	
v10	13	#4	4'-7"	
z	58	#5	6'-5"	
Concrete Box Culverts			Cu. Yd.	320.9
Reinforcement Bars			Pound	67,520

(Sheet 4 of 4)

MODEL: Default
FILE NAME: E:\1902\Struct\SN 016-0933\Final Design\CADD_Sheets\0160933-62H82-008-WeirWallDetails2.dgn

5/5/2023 2:54:08 PM

LIN ENGINEERING, LTD.
Consulting Engineers
Springfield, Illinois

USER NAME = $USER$	DESIGNED - NB	REVISED -	
	CHECKED - MTH	REVISED -	
PLOT TIME = 2:54:08 PM	DRAWN - AJF	REVISED -	
PLOT DATE = 5/5/2023	CHECKED - MTH	REVISED -	

STATE OF ILLINOIS
DEPARTMENT OF TRANSPORTATION

CULVERT DETAILS
STRUCTURE NO. 016-0933

SHEET 8 OF 12 SHEETS

F.A.U. RTE.	SECTION	COUNTY	TOTAL SHEETS	SHEET NO.
3578	2019-001-R	COOK	255	182
		CONTRACT NO. 62H82		
		ILLINOIS FED. AID PROJECT		

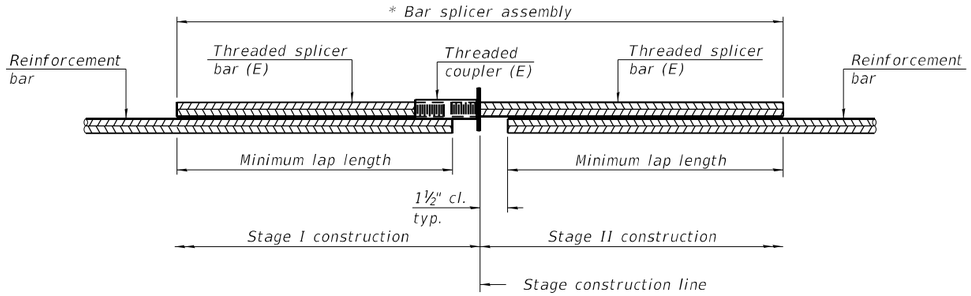

STANDARD BAR SPLICER ASSEMBLY PLAN

(All components shall be provided from one supplier)

Threaded splicer bar length = min. lap length + 1½" + thread length

* Epoxy not required on Bar Splicer Assembly components used in conjunction with black bars.

Location	Bar size	No. assemblies required	Minimum lap length
Top Slab	#5	54	2'-2"
Walls	#4	28	2'-3"
Bottom Slab	#5	54	2'-2"

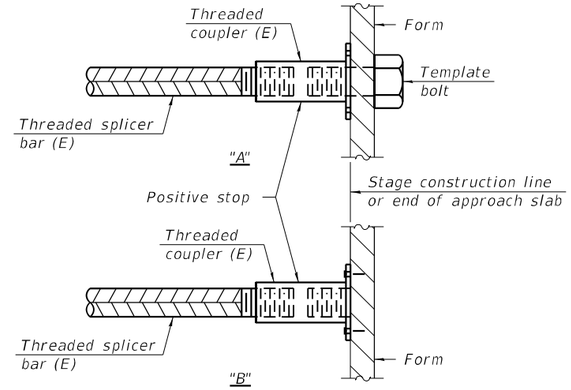

INSTALLATION AND SETTING METHODS

"A" : Set bar splicer assembly by means of a template bolt.
"B" : Set bar splicer assembly by nailing to wood forms or cementing to steel forms.
(E) : Indicates epoxy coating.

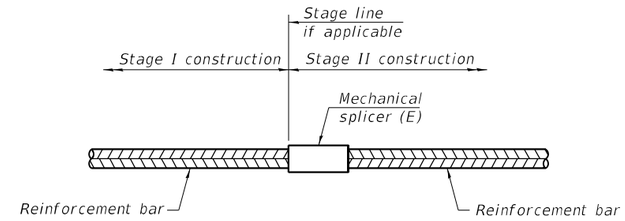

STANDARD MECHANICAL SPLICER

Location	Bar size	No. assemblies required

Notes:
Splicer bars shall be deformed with threaded ends and have a minimum 60 ksi yield strength.
All reinforcement shall be lapped and tied to the splicer bars.
Bar splicer assemblies shall be epoxy coated according to the requirements for reinforcement bars. See Section 508 of the Standard Specifications.
See approved list of bar splicer assemblies and mechanical splicers for alternatives.

BSD-1 1-1-2020

BORING LOG B-04

Wang Engineering
wangeng@wangeng.com
1145 N. Main Street
Lombard/IL/60148
Telephone: 6309539928
Fax: 6309539938

WEI Job No.: 411-05-02

Client: James J. Benes & Associates
Project: IL Route 7 from 131st Street to 135th Street
Location: Cook County, Illinois

Datum: NAVD 88
Elevation: 670.59 ft
North: 1816356.32 ft
East: 1119018.40 ft
Station: 131+53.67
Offset: 189.17 RT

Elevation (ft)	SOIL AND ROCK DESCRIPTION	Sample No.	SPT Values (blw/6 in)	Qu (tsf)	Moisture Content (%)
	13-inch thick ASPHALT --PAVEMENT--				
669.5 / 668.9	7-inch thick CONCRETE --PAVEMENT--				
	Very stiff, brown, black and gray SILTY CLAY to SILTY CLAY LOAM, trace gravel; damp --FILL-- --RDR 2--	1	5 5 6	3.00 P	16
		2	4 2 3	2.50 P	21
665.1 / 664.5	Gray SANDY GRAVEL; damp				
	Soft, gray SILTY CLAY LOAM; wet --RDR 2--	3	2 1 1	0.40 B	24
662.6	Stiff, black Organic SILTY CLAY LOAM; wet				
		4	1 1 1	1.00 P	55
660.1	Medium stiff, brown PEAT, few organic silt lenses; moist --RDR 2--	5	0 0 0	0.90 B	161
656.8	Very soft to medium stiff, black and gray Organic SILTY CLAY; wet --RDR 2--	6	0 0 0	0.49 B	57
		7	PUSH	< 0.25 P	52
		8	0 0 0	0.33 B	49
645.1	--L_L(%)=42, P_L(%)=19-- --%Gravel=0.0-- --%Sand=0.2-- --%Silt=58.7-- --%Clay=41.0-- --%Organics=3.8--				
		9	PUSH	< 0.25 P	41
		10	0 0 0	0.50 P	29
644.3	Brown SANDY LOAM, trace gravel; saturated				
	Stiff to very stiff, brown to gray SILTY CLAY to SILTY CLAY LOAM, trace gravel; damp to moist --RDR 2--	11	4 3 4	1.80 B	17
		12	2 3 5	1.80 B	19
		13	5 7 10	3.36 B	16
		14	5 7 10	2.71 B	19
		15	5 7 9	1.80 B	20
632.6	Very stiff, brown SILTY LOAM to SILTY CLAY LOAM, trace gravel; moist				
		16	4 5 7	3.12 B	16

GENERAL NOTES

Begin Drilling: 02-23-2021 Complete Drilling: 02-23-2021
Drilling Contractor: Wang Testing Services Drill Rig: 17D50A [87%]
Driller: KS&MG Logger: E. Yim Checked by: C. Marin
Drilling Method: 3.25" ID HSA; boring backfilled upon completion

WATER LEVEL DATA

While Drilling: 8.00 ft
At Completion of Drilling: 33.00 ft
Time After Drilling: NA
Depth to Water: NA

The stratification lines represent the approximate boundary between soil types; the actual transition may be gradual.

WANGENGINC 411-05-02.GPJ WANGENG.GDT 5/27/21

BORING LOG B-04

Wang Engineering
wangeng@wangeng.com
1145 N. Main Street
Lombard/IL/60148
Telephone: 6309539928
Fax: 6309539938

WEI Job No.: 411-05-02

Client: James J. Benes & Associates
Project: IL Route 7 from 131st Street to 135th Street
Location: Cook County, Illinois

Datum: NAVD 88
Elevation: 670.59 ft
North: 1816356.32 ft
East: 1119018.40 ft
Station: 131+53.67
Offset: 189.17 RT

Elevation (ft)	SOIL AND ROCK DESCRIPTION	Sample No.	SPT Values (blw/6 in)	Qu (tsf)	Moisture Content (%)
628.6	Very stiff, brown SILTY CLAY LOAM, trace gravel; damp --RDR 2--	17	7 8 10	3.28 B	18
		18	3 6 8	2.05 B	16
625.6	Boring terminated at 45.00 ft				

GENERAL NOTES

Begin Drilling: 02-23-2021 Complete Drilling: 02-23-2021
Drilling Contractor: Wang Testing Services Drill Rig: 17D50A [87%]
Driller: KS&MG Logger: E. Yim Checked by: C. Marin
Drilling Method: 3.25" ID HSA; boring backfilled upon completion

WATER LEVEL DATA

While Drilling: 8.00 ft
At Completion of Drilling: 33.00 ft
Time After Drilling: NA
Depth to Water: NA

The stratification lines represent the approximate boundary between soil types; the actual transition may be gradual.

WANGENGINC 411-05-02.GPJ WANGENG.GDT 5/27/21

BORING LOG B-05

Wang Engineering
wangeng@wangeng.com
1145 N. Main Street
Lombard/IL/60148
Telephone: 6309539928
Fax: 6309539938

WEI Job No.: 411-05-02

Client: James J. Benes & Associates
Project: IL Route 7 from 131st Street to 135th Street
Location: Cook County, Illinois

Datum: NAVD 88
Elevation: 672.17 ft
North: 1816376.05 ft
East: 1119090.62 ft
Station: 131+97.17
Offset: 249.41 RT

Elevation (ft)	SOIL AND ROCK DESCRIPTION	Sample No.	SPT Values (blw/6 in)	Qu (tsf)	Moisture Content (%)
	14-inch thick ASPHALT				
671.0	Very stiff, brown and gray CLAY LOAM, trace gravel; damp --FILL-- --RDR 2--	1	7 7 6	3.50 P	16
		2	3 3 5	3.00 P	20
666.7	Soft to stiff (1.0P), gray SILTY CLAY; moist to wet	3	3 2 3	0.49 B	25
664.2	Stiff, black SILTY CLAY LOAM, some organic matter; moist --RDR 2--	4	1 2 2	1.07 B	91
661.7	Medium stiff, brown PEAT, some clay				
660.7	Very soft to medium stiff, black and gray Organic SILTY CLAY; wet --RDR 2--	5	1 2 2	0.90 B	98
		6	0 0 0	0.14 B	41
		7	0 0 0	< 0.25 P	33
654.2	Loose, gray SANDY LOAM, trace gravel; saturated --RDR 2--	8	0 4 2	NP	18
651.7	Medium stiff, pinkish gray CLAY LOAM, trace gravel; moist --RDR 2--	9	0 0 0	0.66 B	15
649.2	Stiff to very stiff, gray SILTY CLAY LOAM, trace gravel; damp --RDR 2--	10	3 5 6	2.87 B	17
		11	PUSH	3.00 P	20
		12	3 5 8	2.62 B	17
		13	3 4 6	1.97 B	14
639.2	Gray SILT; saturated				
638.2	Stiff to very stiff, gray SILTY CLAY LOAM, trace gravel; damp to moist --RDR 2--	14	2 4 5	1.48 B	17
		15	3 5 6	1.89 B	16
		16	4 5 6	1.39 B	15

GENERAL NOTES

Begin Drilling: 02-23-2021 Complete Drilling: 02-23-2021
Drilling Contractor: Wang Testing Services Drill Rig: 17D50A [87%]
Driller: KS&MG Logger: E. Yim Checked by: C. Marin
Drilling Method: 3.25" ID HSA; boring backfilled upon completion

WATER LEVEL DATA

While Drilling: 18.50 ft
At Completion of Drilling: DRY
Time After Drilling: NA
Depth to Water: NA

The stratification lines represent the approximate boundary between soil types; the actual transition may be gradual.

WANGENGINC 411-05-02.GPJ WANGENG.GDT 5/27/21

(Sheet 1 of 3)

MODEL: Default
FILE NAME: E:\1902\Struct\SN 016-0933\Final Design\CADD_Sheets\0160933-62H82-010-SoilBoringLogs.dgn

LIN ENGINEERING, LTD.
Consulting Engineers
Springfield, Illinois

USER NAME = $USER$	DESIGNED - NB	REVISED -	
	CHECKED - MTH	REVISED -	
PLOT TIME = 2:54:36 PM	DRAWN - AJF	REVISED -	
PLOT DATE = 5/5/2023	CHECKED - MTH	REVISED -	

STATE OF ILLINOIS
DEPARTMENT OF TRANSPORTATION

SOIL BORING LOGS
STRUCTURE NO. 016-0933

SHEET 10 OF 12 SHEETS

F.A.U. RTE.	SECTION	COUNTY	TOTAL SHEETS	SHEET NO.
3578	2019-001-R	COOK	255	184

CONTRACT NO. 62H82

ILLINOIS FED. AID PROJECT

5/5/2023 2:54:36 PM

BORING LOG B-05

Wang Engineering
wangeng@wangeng.com
1145 N. Main Street
Lombard/IL/60148
Telephone: 6309539928
Fax: 6309539938

WEI Job No.: 411-05-02

Client: James J. Benes & Associates
Project: IL Route 7 from 131st Street to 135th Street
Location: Cook County, Illinois

Datum: NAVD 88
Elevation: 672.17 ft
North: 1816376.05 ft
East: 1119090.62 ft
Station: 131+97.17
Offset: 249.41 RT

Profile	Elevation (ft)	SOIL AND ROCK DESCRIPTION	Depth (ft)	Sample Type / recovery	Sample No.	SPT Values (blw/6 in)	Qu (tsf)	Moisture Content (%)
					17	4 5 8	1.80 B	15
	629.2	Brownish gray SILTY LOAM, few silt and clay laminations; damp						
	628.2	Very stiff, gray SILTY CLAY LOAM to SILTY LOAM, trace gravel; damp			18	7 6 8	2.46 B	13
	627.2	Boring terminated at 45.00 ft	45					
			50					
			55					
			60					

GENERAL NOTES

Begin Drilling: 02-23-2021 Complete Drilling: 02-23-2021
Drilling Contractor: Wang Testing Services Drill Rig: 17D50A [87%]
Driller: KS&MG Logger: E. Yim Checked by: C. Marin
Drilling Method: 3.25" ID HSA; boring backfilled upon completion

WATER LEVEL DATA

While Drilling: 18.50 ft
At Completion of Drilling: DRY
Time After Drilling: NA
Depth to Water: NA

The stratification lines represent the approximate boundary between soil types; the actual transition may be gradual.

WANGENGINC 411050.GPJ WANGENG.GDT 5/27/21

BORING LOG CB-13

Wang Engineering
wangeng@wangeng.com
1145 N. Main Street
Lombard/IL/60148
Telephone: 6309539928
Fax: 6309539938

WEI Job No.: 411-05-01

Client: James J. Benes & Associates
Project: IL Route 7 from 131st Street to 135th Street
Location: Cook County, IL

Datum: NAVD 88
Elevation: 673.36 ft
North: 1816295.07 ft
East: 1118992.69 ft
Station: 130+86.4
Offset: 160.4' RT

Profile	Elevation (ft)	SOIL AND ROCK DESCRIPTION	Depth (ft)	Sample Type / recovery	Sample No.	SPT Values (blw/6 in)	Qu (tsf)	Moisture Content (%)
		15-inch thick dense, brown SANDY GRAVEL; damp --RDR 2--			1	12 17 14 8	4.50 P	15
	672.1	Very stiff, brown and black SILTY CLAY, some gravel, fragments of asphalt and brick-- --FILL-- --RDR 2--			2	7 7 10 10	2.30 B	15
			5		3	3 5 5 7	2.62 B	18
	667.4	Medium stiff, black SILTY CLAY LOAM, some gravel; moist --BURIED TOPSOIL-- --RDR 2--			4	2 2 3 3	0.66 B	31
	665.9	Soft to medium stiff, black and brown CLAY to SILTY CLAY, trace to little organic matter; moist --RDR 2--			5	2 2 2 4	0.41 B	54
			10		6	2 2 2	0.82 B	49
			15		7	3 2 2	0.41 B	56
	657.9	Very soft, gray and black organic SILT; wet --RDR 1--			8	2 1 1	0.08 B	88
	655.4	Very soft to soft, gray CLAY to SILTY CLAY, trace organic matter; moist --RDR 1--	20		9	0 0 0	0.08 B	39

Profile	Elevation (ft)	SOIL AND ROCK DESCRIPTION	Depth (ft)	Sample Type / recovery	Sample No.	SPT Values (blw/6 in)	Qu (tsf)	Moisture Content (%)
	651.9	Loose, gray SILT, few sand and clay lamination; wet --RDR 2--			10	0 4 4	0.25 B	35
	650.4	Gray SAND; saturated --RDR 2--						
	649.4	Very stiff, brown SILTY CLAY, trace gravel; damp --RDR 2--			11	7 5 6	2.00 P	27
	648.4	Boring terminated at 25.00 ft	25					
			30					
			35					
			40					

GENERAL NOTES

Begin Drilling: 09-19-2019 Complete Drilling: 09-19-2019
Drilling Contractor: Wang Testing Services Drill Rig:
Driller: KS Logger: I. Nenn Checked by: C. Marin
Drilling Method: 2.25" HSA; boring backfilled upon completion

WATER LEVEL DATA

While Drilling: 21.00 ft
At Completion of Drilling: 18.00 ft
Time After Drilling: NA
Depth to Water: NA

The stratification lines represent the approximate boundary between soil types; the actual transition may be gradual.

WANGENGINC 411050.GPJ WANGENG.GDT 9/19/20

(Sheet 2 of 3)

MODEL: Default
FILE NAME: E:\1902\Struct\SN 016-0933\Final Design\CADD_Sheets\0160933-62H82-011-SoilBoringLogs.dgn

LIN ENGINEERING, LTD. Consulting Engineers Springfield, Illinois	USER NAME = $USER$	DESIGNED - NB	REVISED -	STATE OF ILLINOIS DEPARTMENT OF TRANSPORTATION	SOIL BORING LOGS STRUCTURE NO. 016–0933
		CHECKED - MTH	REVISED -		
	PLOT TIME = 2:54:52 PM	DRAWN - AJF	REVISED -		
	PLOT DATE = 5/5/2023	CHECKED - MTH	REVISED -		SHEET 11 OF 12 SHEETS

F.A.U. RTE.	SECTION	COUNTY	TOTAL SHEETS	SHEET NO.
3578	2019-001-R	COOK	255	185
		CONTRACT NO. 62H82		
		ILLINOIS FED. AID PROJECT		

5/5/2023 2:54:52 PM

Wang Engineering
wangeng@wangeng.com
1145 N. Main Street
Lombard/IL/60148
Telephone: 6309539928
Fax: 6309539938

BORING LOG CB-14

WEI Job No.: 411-05-01

Client: James J. Benes & Associates
Project: IL Route 7 from 131st Street to 135th Street
Location: Cook County, IL

Datum: NAVD 88
Elevation: 670.35 ft
North: 1816356.10 ft
East: 1119001.35 ft
Station: 131+47.4
Offset: 173.8' RT

Elevation (ft)	SOIL AND ROCK DESCRIPTION	Sample Type	Sample No.	SPT Values (blw/6 in)	Qu (tsf)	Moisture Content (%)
	13-inch thick, ASPHALT over 7-inch thick, CONCRETE --PAVEMENT--					
668.7 / 668.4	Brown SANDY GRAVEL --BASE COURSE--					
	Stiff, brown and gray SILTY CLAY; damp --RDR 2--		1	2 2 3 2	1.64 B	20
665.4 (5)	Soft to medium stiff, brown, gray and black SILTY CLAY, trace to some organic matter; damp to wet --RDR 1--		2	3 2 1 2	NR	20
			3	0 0 2 3	0.41 B	53
(10)			4	0 0 2 2	0.82 B	51
			5	0 0 0	0.66 B	51
657.4	Soft, blak and gray Organic CLAY and PEAT; wet --RDR 1--					
(15)			6	0 0 2	0.33 B	98
654.9	Soft, black and dark gray SILTY CLAY, some organic matter; moist --RDR 1-- --L_L(%)=55, P_I(%)=24-- --%Gravel=0.2-- --%Sand=0.8-- --%Silt=66.4-- --%Clay=32.6-- --Organic Content = 6.9%--		7	0 0 1	0.41 B	59
(20)			8	0 0 2	0.25 P	54

Elevation (ft)	SOIL AND ROCK DESCRIPTION	Sample Type	Sample No.	SPT Values (blw/6 in)	Qu (tsf)	Moisture Content (%)
			9	0 2 1	0.41 B	68
			10	1 1 1	0.25 B	43
645.4 (25)	Boring terminated at 25.00 ft					
(30)						
(35)						
(40)						

GENERAL NOTES

Begin Drilling: 09-26-2019 Complete Drilling: 09-26-2019
Drilling Contractor: Wang Testing Services Drill Rig:
Driller: R&J Logger: I. Nenn Checked by: C. Marin
Drilling Method: 2.25" HSA, boring backfilled upon completion

WATER LEVEL DATA

While Drilling: DRY
At Completion of Drilling: DRY
Time After Drilling: NA
Depth to Water: NA

The stratification lines represent the approximate boundary between soil types; the actual transition may be gradual.

WANGENGINC 411050.GPJ WANGENG.GDT 8/19/20

Wang Engineering
wangeng@wangeng.com
1145 N. Main Street
Lombard/IL/60148
Telephone: 6309539928
Fax: 6309539938

BORING LOG CB-15

WEI Job No.: 411-05-01

Client: James J. Benes & Associates
Project: IL Route 7 from 131st Street to 135th Street
Location: Cook County, IL

Datum: NAVD 88
Elevation: 671.73 ft
North: 1816394.26 ft
East: 1119081.48 ft
Station: 132+10.5
Offset: 234.3' RT

Elevation (ft)	SOIL AND ROCK DESCRIPTION	Sample Type	Sample No.	SPT Values (blw/6 in)	Qu (tsf)	Moisture Content (%)
	20-inch thick, ASPHALT --PAVEMENT--					
670.1	Stiff, brown and gray SILTY CLAY; damp --FILL-- --RDR 2--		1	3 3 4 3	1.64 B	22
666.1 (5)	Medium stiff, brown and gray CLAY to SILTY CLAY; damp --RDR 2--		2	5 3 3 2	1.50 P	20
664.9	Medium stiff, black SILTY CLAY, trace to some organic matter; moist --RDR 1--		3	3 2 2 2	0.82 B	33
(10)			4	0 2 2 1	0.74 B	66
660.0	Medium stiff, dark brown Organic SILTY CLAY to PEAT; moist --RDR 1--		5	1 2 1	0.82 B	95
658.0	Soft, gray and black SILTY CLAY, some organic matter; moist to saturated --RDR 1--		6	0 0 2	0.25 P	52
656.2	Very soft, gray CLAY to SILTY CLAY; wet --RDR 1-- --L_L(%)=36, P_I(%)=19-- --%Gravel=6.5-- --%Sand=15.2-- --%Silt=46.0-- --%Clay=32.3--		7	2 2 3	0.16 B	35
653.7	Medium stiff to very stiff, brown SILTY CLAY to SILTY CLAY		8	2 2 3	0.57 B	13

Elevation (ft)	SOIL AND ROCK DESCRIPTION	Sample Type	Sample No.	SPT Values (blw/6 in)	Qu (tsf)	Moisture Content (%)
	LOAM, trace to little gravel; damp --RDR 2--		9	3 4 6	0.74 B	18
646.7 (25)	Boring terminated at 25.00 ft		10	4 5 8	2.30 B	20
(30)						
(35)						
(40)						

GENERAL NOTES

Begin Drilling: 09-26-2019 Complete Drilling: 09-26-2019
Drilling Contractor: Wang Testing Services Drill Rig:
Driller: R&J Logger: I. Nenn Checked by: C. Marin
Drilling Method: 2.25" HSA, boring backfilled upon completion

WATER LEVEL DATA

While Drilling: 17.50 ft
At Completion of Drilling: DRY
Time After Drilling: NA
Depth to Water: NA

The stratification lines represent the approximate boundary between soil types; the actual transition may be gradual.

WANGENGINC 411050.GPJ WANGENG.GDT 8/19/20

(Sheet 3 of 3)

MODEL: Default
FILE NAME: E:\1902\Struct\SN 016-0933\Final Design\CADD_Sheets\0160933-62H82-012-SoilBoringLogs.dgn

LIN ENGINEERING, LTD.
Consulting Engineers
Springfield, Illinois

USER NAME = $USER$	DESIGNED - NB	REVISED -	
	CHECKED - MTH	REVISED -	
PLOT TIME = 2:55:12 PM	DRAWN - AJF	REVISED -	
PLOT DATE = 5/5/2023	CHECKED - MTH	REVISED -	

STATE OF ILLINOIS
DEPARTMENT OF TRANSPORTATION

SOIL BORING LOGS
STRUCTURE NO. 016–0933

SHEET 12 OF 12 SHEETS

F.A.U. RTE.	SECTION	COUNTY	TOTAL SHEETS	SHEET NO.
3578	2019-001-R	COOK	255	186

CONTRACT NO. 62H82

ILLINOIS FED. AID PROJECT

5/5/2023 2:55:12 PM

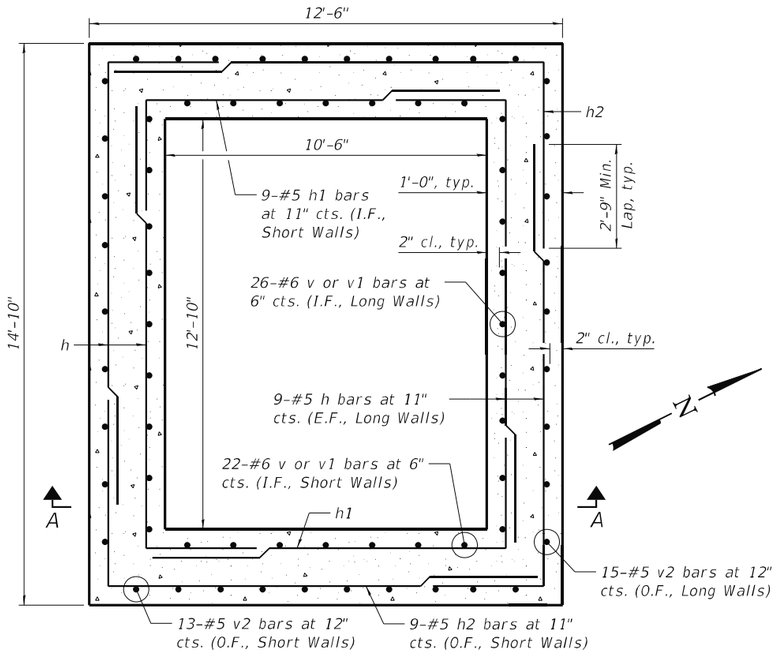

PLAN VIEW SHOWING WALL REINFORCEMENT

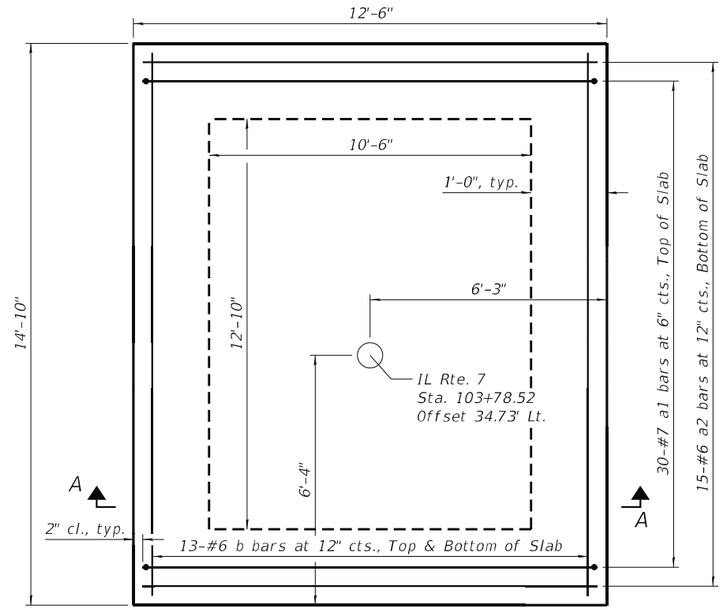

PLAN VIEW SHOWING FOOTING REINFORCEMENT

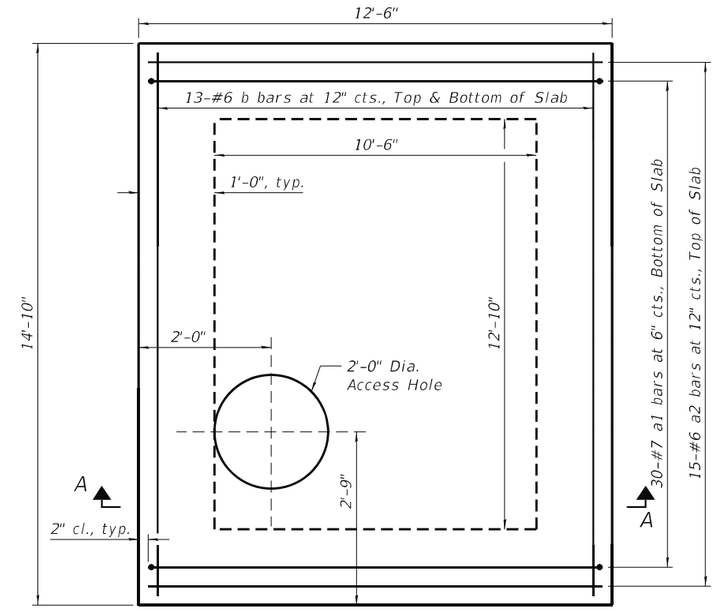

PLAN VIEW SHOWING TOP SLAB REINFORCEMENT

Notes:

f'c = 3,500 psi

fy = 60,000 psi (Reinforcement)

Cover from the face of concrete to face of reinforcement bars shall be 3" for surfaces formed against earth and 2" for all other surfaces unless otherwise shown.

See Standard 602701 for details of steps.

See Drainage Plans and Drainage Structures Tables for additional information.

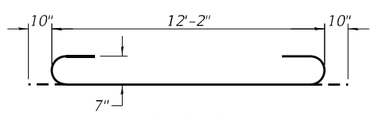

BAR a1

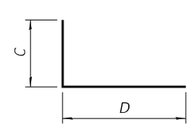

Bar	C	D
h	2'-9"	13'-1"
h1	2'-9"	10'-11"
h2	4'-1"	12'-0"
v	3'-6"	1'-0"

BARS h, h1, h2, & v

Pipe No.	I.D.	W	X	Y	Z
P-18	72"	h4	5'-0"	5'-0"	4'-5½"
P-19	72"	h3	5'-0"	4'-0"	4'-1⅞"
P-20	12"	h5	1'-9"	1'-0"	1'-4¾"
P-21	72"	h3	5'-0"	4'-0"	4'-1⅞"

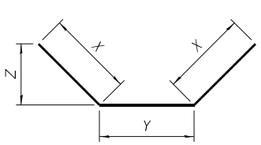

BARS h3, h4, & h5

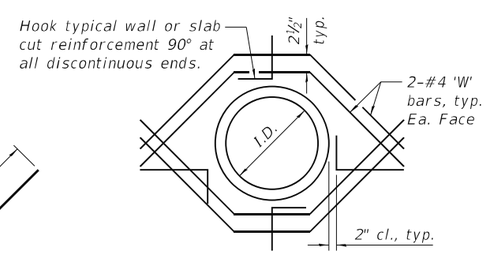

ADDITIONAL REINFORCEMENT FOR OPENINGS

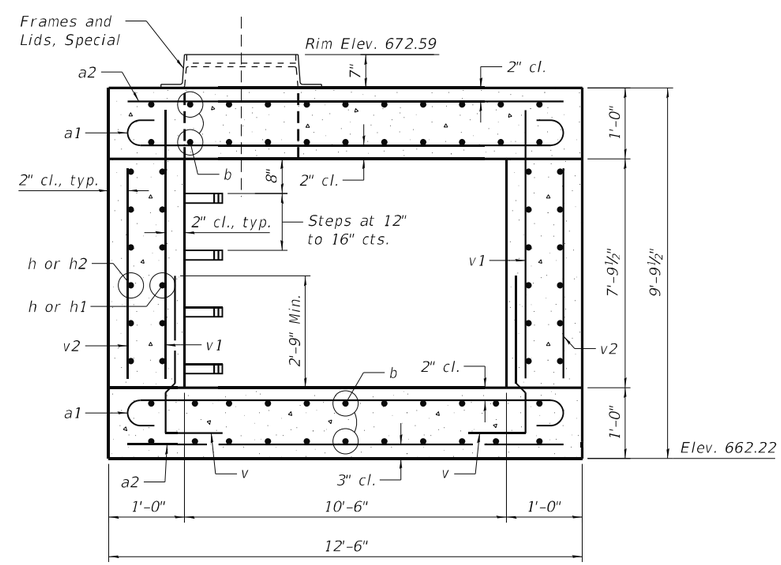

SECTION A-A

BILL OF MATERIAL

Bar	No.	Size	Length	Shape
a1	60	#7	13'-10"	
a2	30	#6	12'-2"	
b	52	#6	14'-6"	
h	36	#5	15'-10"	
h1	18	#5	13'-8"	
h2	18	#5	16'-1"	
h3	16	#4	14'-0"	
h4	8	#4	15'-0"	
h5	8	#4	4'-6"	
v	96	#6	4'-6"	
v1	96	#6	8'-4"	
v2	56	#5	7'-5"	
Concrete Structures			Cu. Yd.	25.1
Reinforcement Bars			Pound	7,080
Frames and Lids, Special			Each	1

MODEL: Default
FILE NAME: E:\1902\Struct\Final Design\Design Plans\CADD_Sheets\C01-D162H82-001-IC Details.dgn

LIN ENGINEERING, LTD.
Consulting Engineers
Springfield, Illinois

USER NAME = Mike Haley	DESIGNED - AGJ	REVISED -	
	CHECKED - VPT	REVISED -	
PLOT TIME = 9:02:24 AM	DRAWN - AGJ	REVISED -	
PLOT DATE = 12/23/2022	CHECKED - VPT	REVISED -	

STATE OF ILLINOIS
DEPARTMENT OF TRANSPORTATION

JUNCTION CHAMBER DETAILS
STRUCTURE NO. S-20, STATION 103+78.52

SHEET 1 OF 1 SHEETS

F.A.U. RTE.	SECTION	COUNTY	TOTAL SHEETS	SHEET NO.
3578	2019-001-R	COOK	255	187

CONTRACT NO. 62H82

ILLINOIS FED. AID PROJECT

12/23/2022 9:02:24 AM

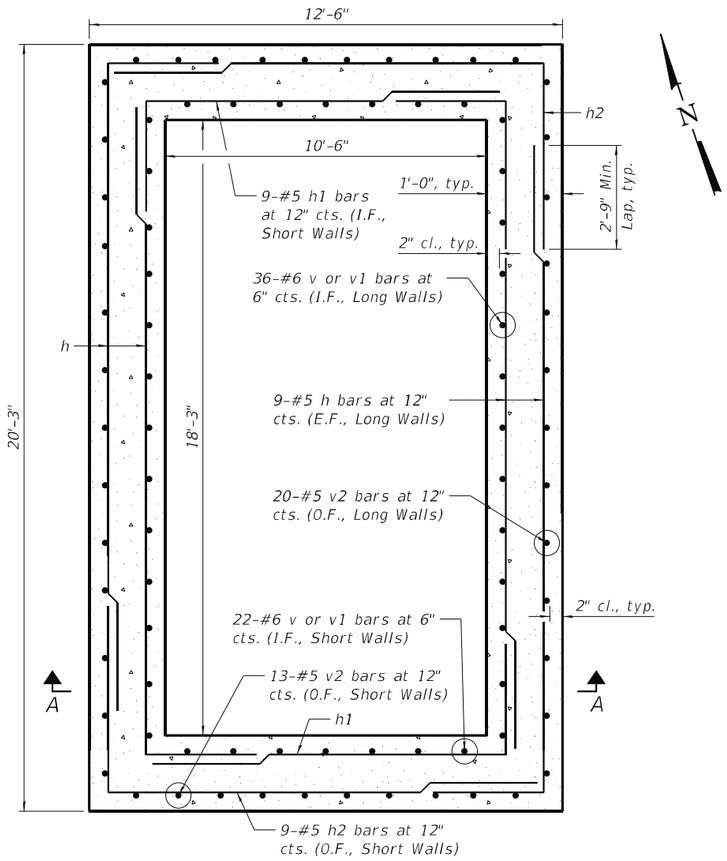

PLAN VIEW SHOWING WALL REINFORCEMENT

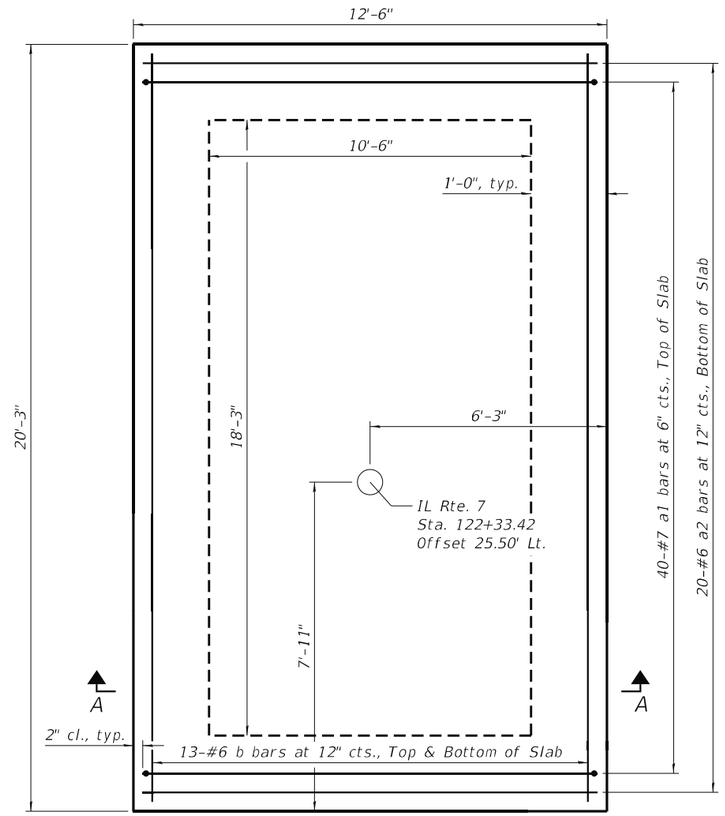

PLAN VIEW SHOWING FOOTING REINFORCEMENT

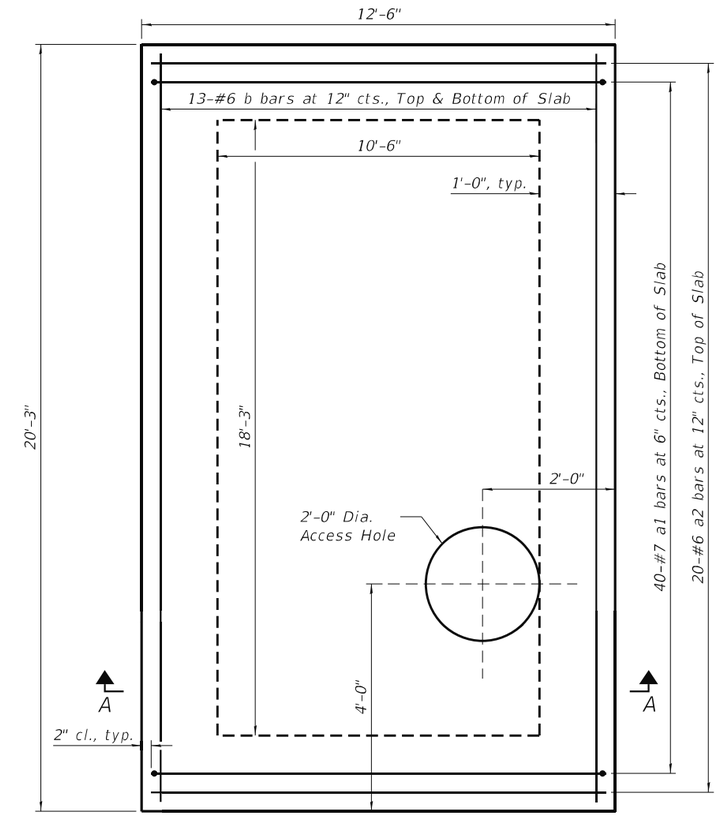

PLAN VIEW SHOWING TOP SLAB REINFORCEMENT

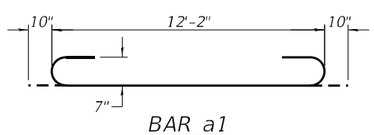

BAR a1

Notes:
f'c = 3,500 psi
fy = 60,000 psi (Reinforcement)
Cover from the face of concrete to face of reinforcement bars shall be 3" for surfaces formed against earth and 2" for all other surfaces unless otherwise shown.
See Standard 602701 for details of steps.
See Drainage Plans and Drainage Structures Tables for additional information.

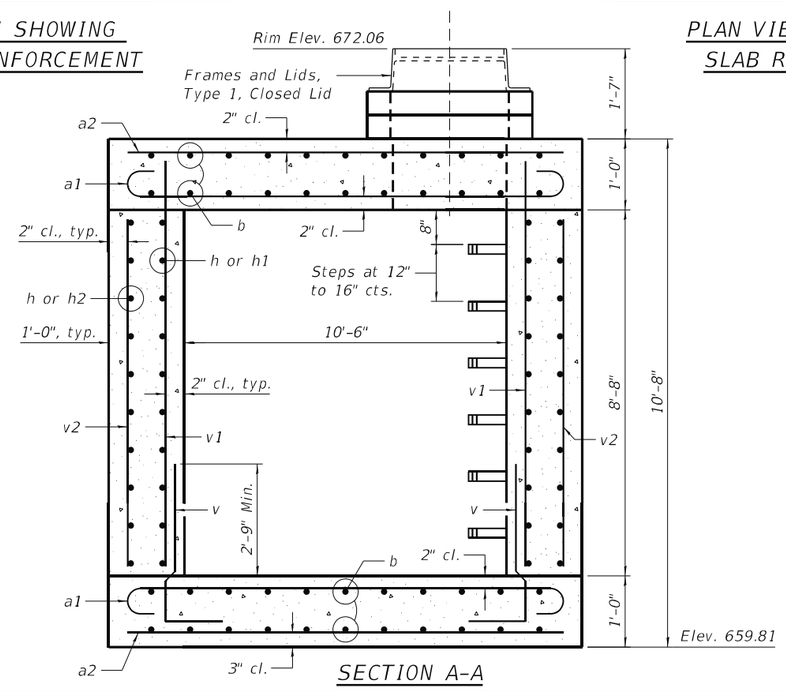

SECTION A-A

BILL OF MATERIAL

Bar	No.	Size	Length	Shape
a1	80	#7	13'-10"	
a2	40	#6	12'-2"	
b	52	#6	19'-11"	
h	36	#5	21'-3"	
h1	18	#5	13'-8"	
h2	18	#5	16'-1"	
h3	16	#4	14'-0"	
h4	8	#4	15'-0"	
h5	24	#4	4'-6"	
v	116	#6	4'-6"	
v1	116	#6	9'-2"	
v2	66	#5	8'-4"	
Concrete Structures			Cu. Yd.	35.4
Reinforcement Bars			Pound	9,180
Frames and Lids, Type 1, Closed Lid			Each	1

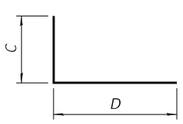

Bar	C	D
h	2'-9"	18'-6"
h1	2'-9"	10'-11"
h2	4'-1"	12'-0"
v	3'-6"	1'-0"

BARS h, h1, h2, & v

Pipe No.	I.D.	W	X	Y	Z
P-48	72"	h3	5'-0"	4'-0"	4'-1⅞"
P-52	72"	h3	5'-0"	4'-0"	4'-1⅞"
P-53	60"	h4	5'-0"	5'-0"	4'-0⅝"
P-54	12"	h5	1'-9"	1'-0"	1'-4¾"
P-55	15"	h5	1'-9"	1'-0"	1'-4¾"
P-56	12"	h5	1'-9"	1'-0"	1'-4¾"

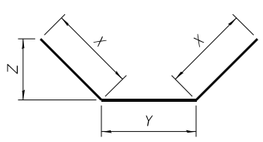

BARS h3, h4, & h5

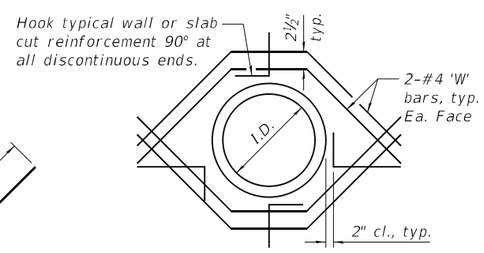

ADDITIONAL REINFORCEMENT FOR OPENINGS

MODEL: Default
FILE NAME: E:\1902\Struct\Final Design\Design Plans\CADD_Sheets\C02-D162H82-001-IC Details.dgn

LIN ENGINEERING, LTD.
Consulting Engineers
Springfield, Illinois

USER NAME = Mike Haley	DESIGNED - AGJ	REVISED -	
	CHECKED - VPT	REVISED -	
PLOT TIME = 9:02:25 AM	DRAWN - AGJ	REVISED -	
PLOT DATE = 12/23/2022	CHECKED - VPT	REVISED -	

STATE OF ILLINOIS
DEPARTMENT OF TRANSPORTATION

JUNCTION CHAMBER DETAILS
STRUCTURE NO. S-56, STATION 122+33.42
SHEET 1 OF 1 SHEETS

F.A.U. RTE.	SECTION	COUNTY	TOTAL SHEETS	SHEET NO.
3578	2019-001-R	COOK	255	188

CONTRACT NO. 62H82
ILLINOIS FED. AID PROJECT

12/23/2022 9:02:25 AM

Benchmark: BM #6: Cut " □ " in East end of headwall of concrete structure north of commercial entrance located along IL Rte. 7, near Sta. 110+34 Rt. Elevation = 690.28 (NAVD88).

Existing Structure: None.

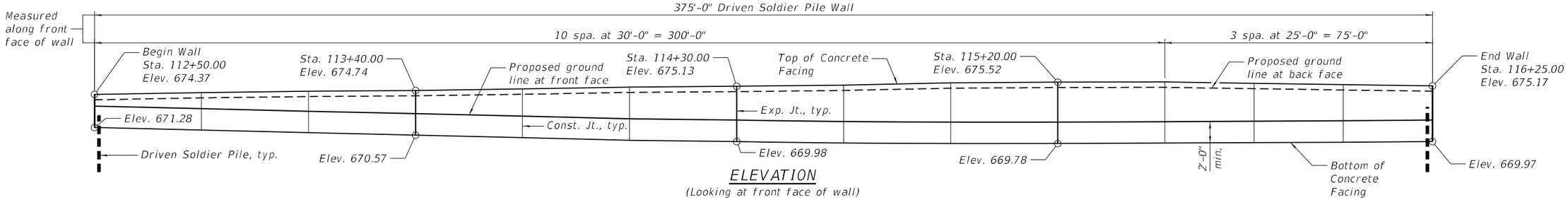

ELEVATION
(Looking at front face of wall)

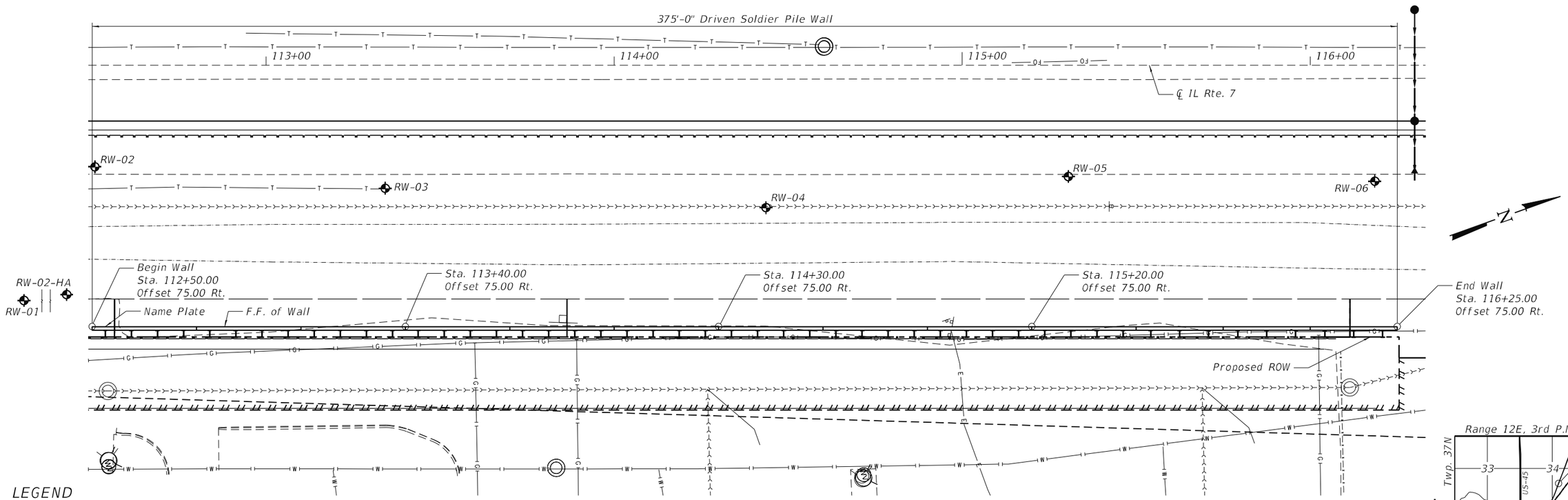

PLAN

Stations and offsets are measured from proposed ℄ IL Rte. 7 to front face of wall

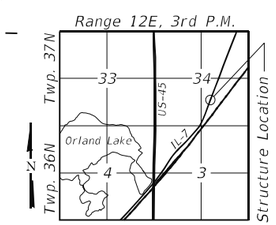

LOCATION SKETCH

LEGEND

- Boring Logs
- Guardrail
- Right of Way
- Ex. Right of Way
- Temp. Easement
- Ex. Underground Gasline
- Ex. Underground Water
- Ex. Underground Telephone
- Ex. Underground Sanitary Sewer
- Ex. Underground Electric
- Water Edge

DESIGN SPECIFICATIONS

2020 AASHTO LRFD Bridge Design Specifications, 9th Edition

DESIGN STRESSES

FIELD UNITS

f'c = 3,500 psi
fy = 60,000 psi (Reinforcement)
fy = 50,000 psi (Structural Steel)

INDEX OF SHEETS

GENERAL PLAN & ELEVATION
IL ROUTE 7
F.A.U. RTE. 3578 - SEC 2019-001-R
COOK COUNTY
STATION 112+50.00 TO 116+25.00
STRUCTURE NO. 016-Z062

LIN ENGINEERING, LTD.
Consulting Engineers
Springfield, Illinois

USER NAME =	DESIGNED - CL	REVISED -	
	CHECKED - NB	REVISED -	
PLOT SCALE =	DRAWN - AJF	REVISED -	
PLOT DATE = 12/23/2022	CHECKED - MTH	REVISED -	

STATE OF ILLINOIS
DEPARTMENT OF TRANSPORTATION

SHEET 1 OF 11 SHEETS

F.A.U. RTE.	SECTION	COUNTY	TOTAL SHEETS	SHEET NO.
3578	2019-001-R	COOK	255	189

CONTRACT NO. 62H82

ILLINOIS | FED. AID PROJECT

MODEL: Default
FILE NAME: E:\1902\Struct\Retaining Wall\Final design\CADD\CADD_Sheets\0162062-62H82-001-GPE.dgn

12/23/2022 10:14:54 AM

SUGGESTED SEQUENCE OF CONSTRUCTION

1. Drive soldier pile to required tip elevation indicated in the Soldier Pile Data Table on sheet 5 of 11.
2. Excavate in front of wall in stages removing only the soil necessary to place each timber lagging and the Geocomposite Wall Drain.
3. Continue the excavation for construction of French Drains and line trench with Geotechnical Filter Fabric.
4. Place the Pipe Underdrains for Structures 4" and connect the vertical Geocomposite Wall Drain to the longitudinal French Drain and backfill as shown on the plans.
5. Construct wall panels, and provide guardrail.

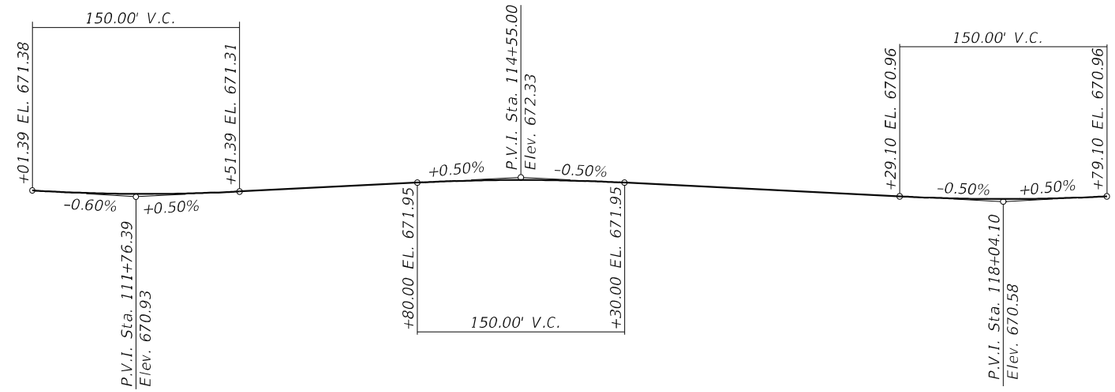

PROFILE GRADE

(Along Proposed ℄ IL Rte. 7)

STATION 112+50.00 TO 116+25.00
BUILT BY
STATE OF ILLINOIS
FAU RT. 3578 SEC. 2019-001-R
STRUCTURE NO. 016-Z062

NAME PLATE

See Std. 515001

TOTAL BILL OF MATERIAL

ITEM	UNIT	TOTAL
Structure Excavation	Cu. Yd.	205
Form Liner Textured Surface	Sq. Ft.	1,458
Stud Shear Connectors	Each	127
Reinforcement Bars, Epoxy Coated	Pound	5,280
Name Plates	Each	1
Furnishing Soldier Piles (HP Section)	Foot	1,189
Driving Soldier Piles	Foot	1,189
Untreated Timber Lagging	Sq. Ft.	1,128
Concrete Structures (Retaining Wall)	Cu. Yd.	67.8
Concrete Sealer	Sq. Ft.	2,389
Geocomposite Wall Drain	Sq. Yd.	90
Pipe Underdrains for Structures 4"	Foot	375

GENERAL NOTES

1. Reinforcement Bars designated (E) shall be Epoxy Coated.
2. All exposed concrete edges shall have a ¾" X 45° chamfer, except where shown otherwise. Chamfer on vertical edges shall be continued a minimum of one foot below finished ground level.
3. Reinforcement Bar bending dimensions are out to out.
4. Cover from the face of concrete to face of reinforcement bars shall be 3" for surfaces formed against earth and 2" for all other surfaces unless otherwise shown.
5. No construction joints except those shown on the plans will be allowed unless approved by the engineer.
6. Protective Concrete Sealer shall be applied to all exposed surfaces of the Retaining Wall facing.
7. The Contractor shall use care when excavating around existing foundations, retaining walls, and other structures. Any damage to the existing structure and/or supporting foundation shall be repaired or replaced at the Contractor's expense.
8. The Contractor is responsible for the design and performance of the lagging using no less than a 3 in. nominal rough-sawn thickness and timber with a minimum allowable bending stress of 1000 psi.
9. The soil boring logs represent point information. Presentation of this information in no way implies that subsurface conditions are the same at locations other than the exact locations of the boring.
10. Bars noted thus, 3x2-#5 indicates 3 lines of bars with 2 lengths of bars per line.
11. Reinforcement bar bending details shall be in accordance with the latest "Manual of Standard Practice for Detailing Reinforced Concrete Structures", ACI 315.
12. Contractor shall not scale dimensions from the contract plans for construction purposes.

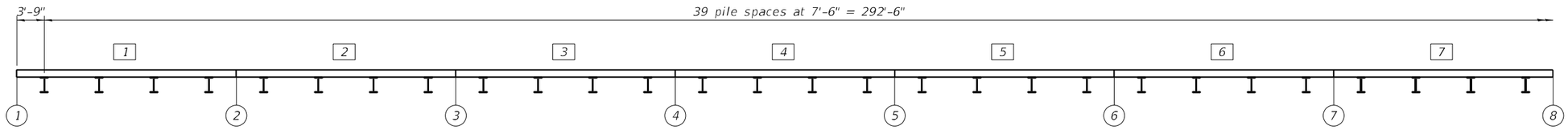

PLAN

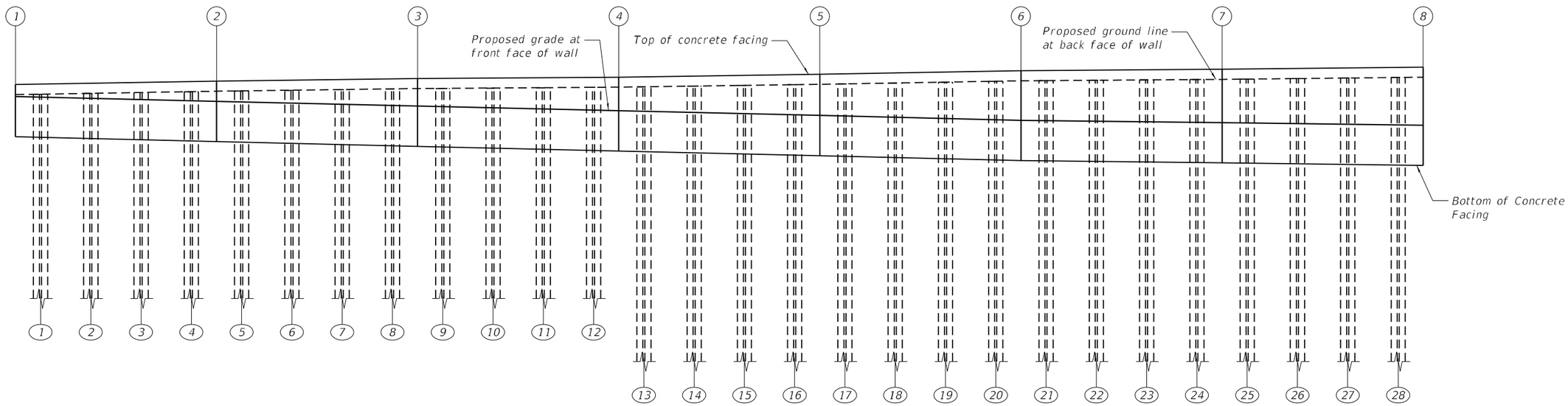

ELEVATION

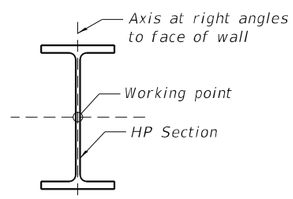

TYPICAL PILE SECTION

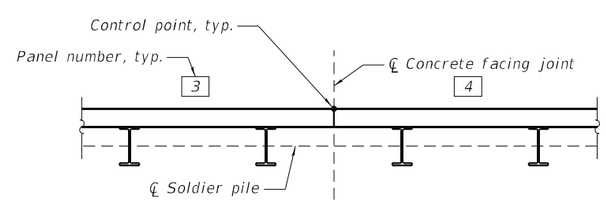

LEGEND

Control Point (X)

Panel Number [X]

Pile Number (XX)

TYPICAL CONTROL POINT SECTION

Panel	C.P. No.	Station	Offset (ft)
	1	112+50.00	75.00
1	2	112+80.00	75.00
2	3	113+10.00	75.00
3	4	113+40.00	75.00
4	5	113+70.00	75.00
5	6	114+00.00	75.00
6	7	114+30.00	75.00
7	8	114+60.00	75.00

Offset measured to front face of panel.

(Sheet 1 of 2)

MODEL: Default
FILE NAME: E:\1902\Struct\Retaining Wall\Final design\CADD\CADD_Sheets\0162062-62H82-003-Soldier Piles 1.dgn

LIN ENGINEERING, LTD.
Consulting Engineers
Springfield, Illinois

USER NAME =	DESIGNED - CL	REVISED -	
	CHECKED - NB	REVISED -	
PLOT SCALE =	DRAWN - AJF	REVISED -	
PLOT DATE = 12/23/2022	CHECKED - MTH	REVISED -	

STATE OF ILLINOIS
DEPARTMENT OF TRANSPORTATION

SOLDIER PILES
STRUCTURE NO. 016-Z062

SHEET 3 OF 11 SHEETS

F.A.U. RTE.	SECTION	COUNTY	TOTAL SHEETS	SHEET NO.
3578	2019-001-R	COOK	255	191

CONTRACT NO. 62H82

ILLINOIS FED. AID PROJECT

12/23/2022 10:14:55 AM

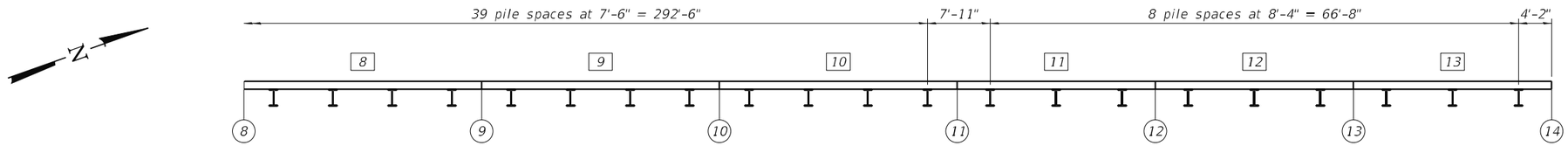

PLAN

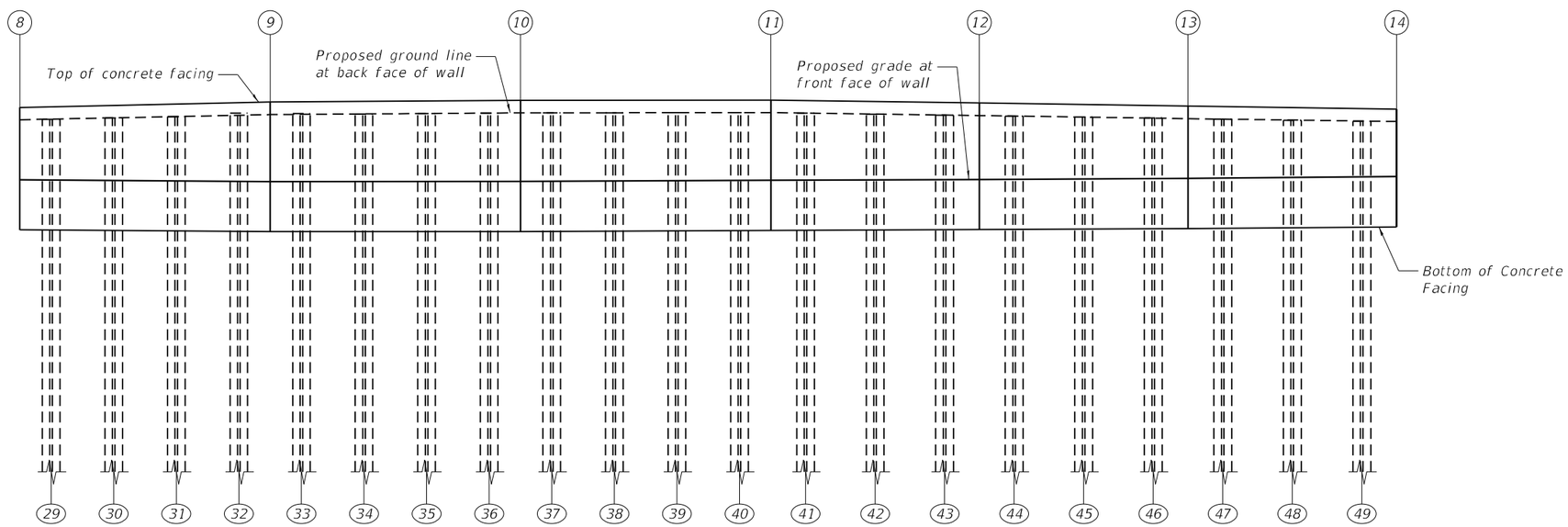

ELEVATION

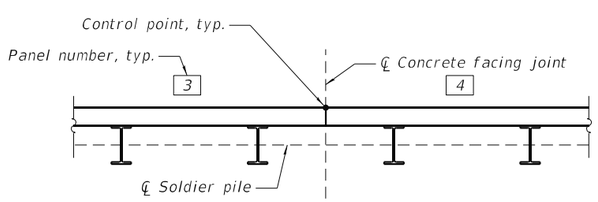

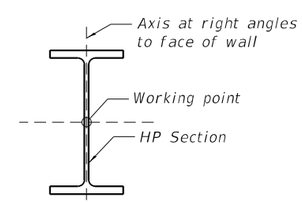

TYPICAL PILE SECTION

TYPICAL CONTROL POINT SECTION

Panel	C.P. No.	Station	Offset (ft)
	8	114+60.00	75.00
8	9	114+90.00	75.00
9	10	115+20.00	75.00
10	11	115+50.00	75.00
11	12	115+75.00	75.00
12	13	116+00.00	75.00
13	14	116+25.00	75.00

Offset measured to front face of panel.

LEGEND

Control Point (X)

Panel Number [X]

Pile Number (XX)

(Sheet 2 of 2)

LIN ENGINEERING, LTD.
Consulting Engineers
Springfield, Illinois

USER NAME =	DESIGNED - CL	REVISED -	
	CHECKED - NB	REVISED -	
PLOT SCALE =	DRAWN - AJF	REVISED -	
PLOT DATE = 12/23/2022	CHECKED - MTH	REVISED -	

STATE OF ILLINOIS
DEPARTMENT OF TRANSPORTATION

SOLDIER PILES
STRUCTURE NO. 016-Z062

SHEET 4 OF 11 SHEETS

F.A.U. RTE.	SECTION	COUNTY	TOTAL SHEETS	SHEET NO.
3578	2019-001-R	COOK	255	192

CONTRACT NO. 62H82

ILLINOIS | FED. AID PROJECT

MODEL: Default
FILE NAME: E:\1902\Struct\Retaining Wall\Final design\CADD\CADD_Sheets\0162062-62H82-004-Soldier Piles 2.dgn

12/23/2022 10:14:55 AM

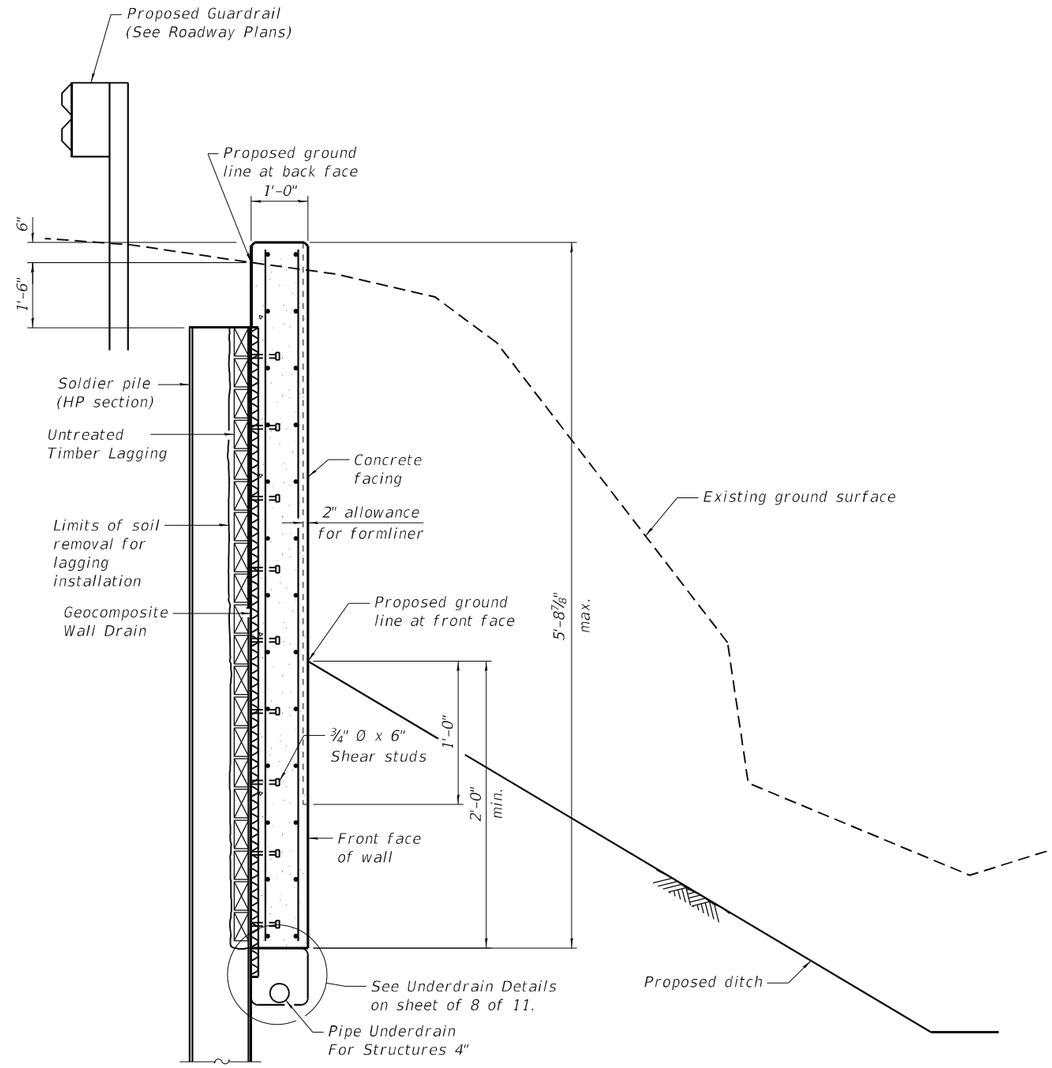

TYPICAL SECTION THRU
SOLDIER PILE WALL

SOLDIER PILE DATA TABLE

Pile Number	Pile Size	Station at F.F. of Wall	Offset at F.F. of Wall (ft)	Top of Facing Elev.	Top of Pile Elev.	Finished Grade Elev. at F.F. of Wall	Bottom of Facing Elev.	Pile Tip Elev.	Length of Pile (ft)	No. of Shear Studs
1	HP12x53	112+53.75	75.00	674.39	672.39	673.25	671.25	650.39	22	1
2	HP12x53	112+61.25	75.00	674.43	672.43	673.19	671.19	650.43	22	1
3	HP12x53	112+68.75	75.00	674.48	672.48	673.13	671.13	650.48	22	1
4	HP12x53	112+76.25	75.00	674.52	672.52	673.07	671.07	650.52	22	1
5	HP12x53	112+83.75	75.00	674.56	672.56	673.01	671.01	650.56	22	2
6	HP12x53	112+91.25	75.00	674.59	672.59	672.95	670.95	650.59	22	2
7	HP12x53	112+98.75	75.00	674.62	672.62	672.89	670.89	650.62	22	2
8	HP12x53	113+06.25	75.00	674.65	672.65	672.83	670.83	650.65	22	2
9	HP12x53	113+13.75	75.00	674.68	672.68	672.77	670.77	650.68	22	2
10	HP12x53	113+21.75	75.00	674.70	672.70	672.71	670.71	650.70	22	2
11	HP12x53	113+28.75	75.00	674.71	672.71	672.66	670.66	650.71	22	2
12	HP12x53	113+36.25	75.00	674.73	672.73	672.60	670.60	650.73	22	2
13	HP12x53	113+43.75	75.00	674.76	672.76	672.54	670.54	647.76	25	2
14	HP12x53	113+51.25	75.00	674.79	672.79	672.48	670.48	647.79	25	2
15	HP12x53	113+58.75	75.00	674.83	672.83	672.43	670.43	647.83	25	2
16	HP12x53	113+66.25	75.00	674.86	672.86	672.37	670.37	647.86	25	2
17	HP12x53	113+73.75	75.00	674.90	672.90	672.31	670.31	647.90	25	3
18	HP12x53	113+81.25	75.00	674.95	672.95	672.25	670.25	647.95	25	3
19	HP12x53	113+88.75	75.00	674.99	672.99	672.18	670.18	647.99	25	3
20	HP12x53	113+96.25	75.00	675.04	673.04	672.12	670.12	648.04	25	3
21	HP12x53	114+03.75	75.00	675.07	673.07	672.08	670.08	648.07	25	3
22	HP12x53	114+11.25	75.00	675.09	673.09	672.05	670.05	648.09	25	3
23	HP12x53	114+18.75	75.00	675.10	673.10	672.02	670.02	648.10	25	3
24	HP12x53	114+26.25	75.00	675.12	673.12	671.99	669.99	648.12	25	3
25	HP12x53	114+33.75	75.00	675.14	673.14	671.96	669.96	648.14	25	3
26	HP12x53	114+41.25	75.00	675.17	673.17	671.93	669.93	648.17	25	3
27	HP12x53	114+48.75	75.00	675.20	673.20	671.90	669.90	648.20	25	3
28	HP12x53	114+56.25	75.00	675.23	673.23	671.87	669.87	648.23	25	3
29	HP12x53	114+63.75	75.00	675.27	673.27	671.84	669.84	648.27	25	3
30	HP12x53	114+71.25	75.00	675.32	673.32	671.82	669.82	648.32	25	3
31	HP12x53	114+78.75	75.00	675.37	673.37	671.80	669.80	648.37	25	3
32	HP12x53	114+86.25	75.00	675.42	673.42	671.78	669.78	648.42	25	3
33	HP12x53	114+93.75	75.00	675.46	673.46	671.77	669.77	648.46	25	3
34	HP12x53	115+01.25	75.00	675.48	673.48	671.77	669.77	648.48	25	3
35	HP12x53	115+08.75	75.00	675.49	673.49	671.78	669.78	648.49	25	3
36	HP12x53	115+16.25	75.00	675.51	673.51	671.78	669.78	648.51	25	3
37	HP12x53	115+23.75	75.00	675.52	673.52	671.79	669.79	648.52	25	3
38	HP12x53	115+31.25	75.00	675.52	673.52	671.80	669.80	648.52	25	3
39	HP12x53	115+38.75	75.00	675.53	673.53	671.81	669.81	648.53	25	3
40	HP12x53	115+46.25	75.00	675.53	673.53	671.82	669.82	648.53	25	3
41	HP12x53	115+54.17	75.00	675.51	673.51	671.84	669.84	648.51	25	3
42	HP12x53	115+62.50	75.00	675.47	673.47	671.85	669.85	648.47	25	3
43	HP12x53	115+70.83	75.00	675.43	673.43	671.85	669.85	648.43	25	3
44	HP12x53	115+79.17	75.00	675.39	673.39	671.87	669.87	648.39	25	3
45	HP12x53	115+87.50	75.00	675.35	673.35	671.88	669.88	648.35	25	3
46	HP12x53	115+95.83	75.00	675.31	673.31	671.89	669.89	648.31	25	3
47	HP12x53	116+04.17	75.00	675.27	673.27	671.91	669.91	648.27	25	3
48	HP12x53	116+12.50	75.00	675.23	673.23	671.93	669.93	648.23	25	3
49	HP12x53	116+20.83	75.00	675.19	673.19	671.96	669.96	648.19	25	3

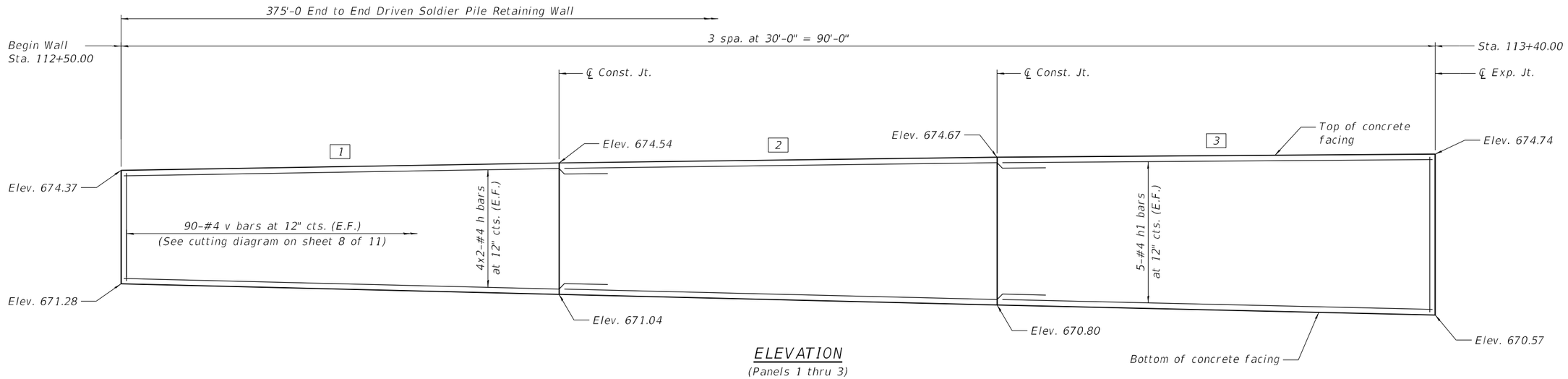

ELEVATION
(Panels 1 thru 3)

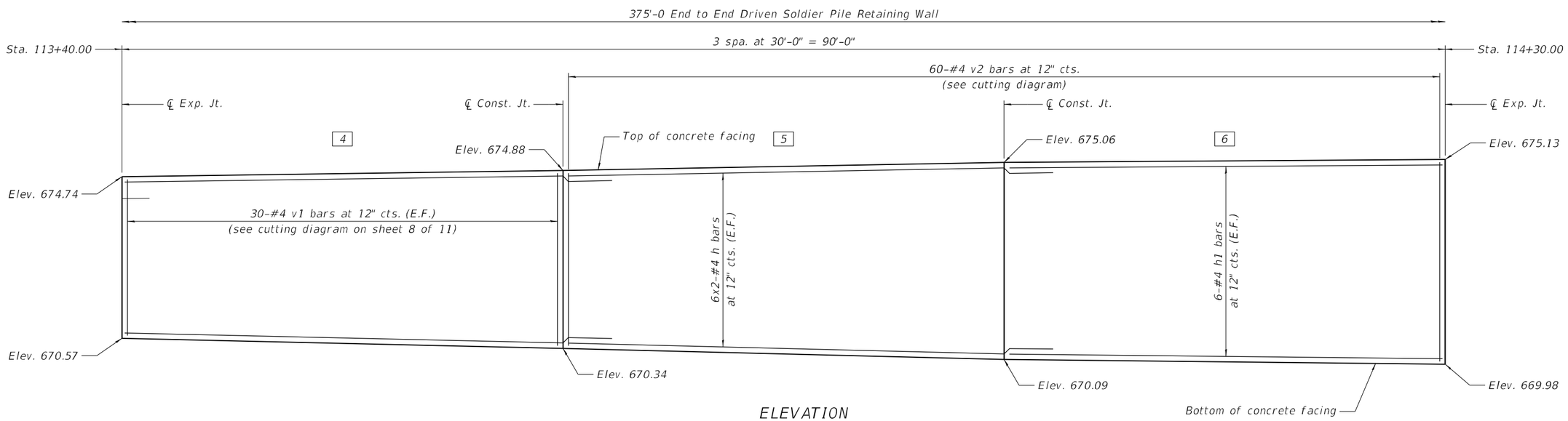

ELEVATION
(Panels 4 thru 6)

MIN. BAR LAP
#4 bar = 2'-11"

LEGEND
Panel Number X

(Sheet 1 of 2)

MODEL: Default
FILE NAME: E:\1902\Struct\Retaining Wall\Final design\CADD\CADD_Sheets\0162062-62H82-006-Concrete Facing 1.dgn

LIN ENGINEERING, LTD. Consulting Engineers Springfield, Illinois	USER NAME =	DESIGNED - CL	REVISED -	STATE OF ILLINOIS DEPARTMENT OF TRANSPORTATION	CONCRETE FACING STRUCTURE NO. 016-Z062	F.A.U. RTE.	SECTION	COUNTY	TOTAL SHEETS / SHEET NO.
		CHECKED - NB	REVISED -			3578	2019-001-R	COOK	255 / 194
	PLOT SCALE =	DRAWN - AJF	REVISED -					CONTRACT NO. 62H82	
	PLOT DATE = 12/23/2022	CHECKED - MTH	REVISED -		SHEET 6 OF 11 SHEETS		ILLINOIS	FED. AID PROJECT	

12/23/2022 10:14:56 AM

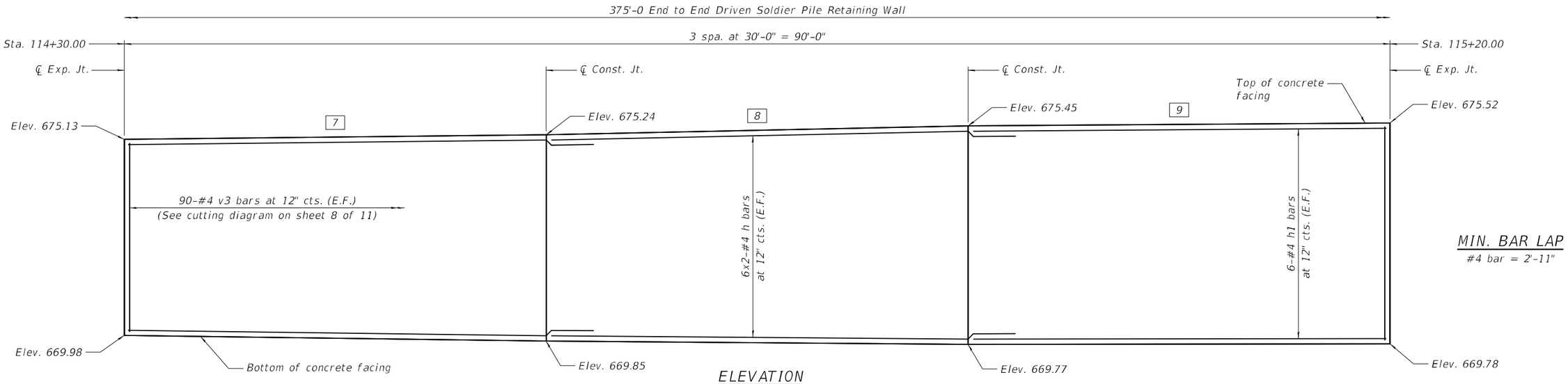

MIN. BAR LAP

#4 bar = 2'-11"

ELEVATION

(Panels 7 thru 9)

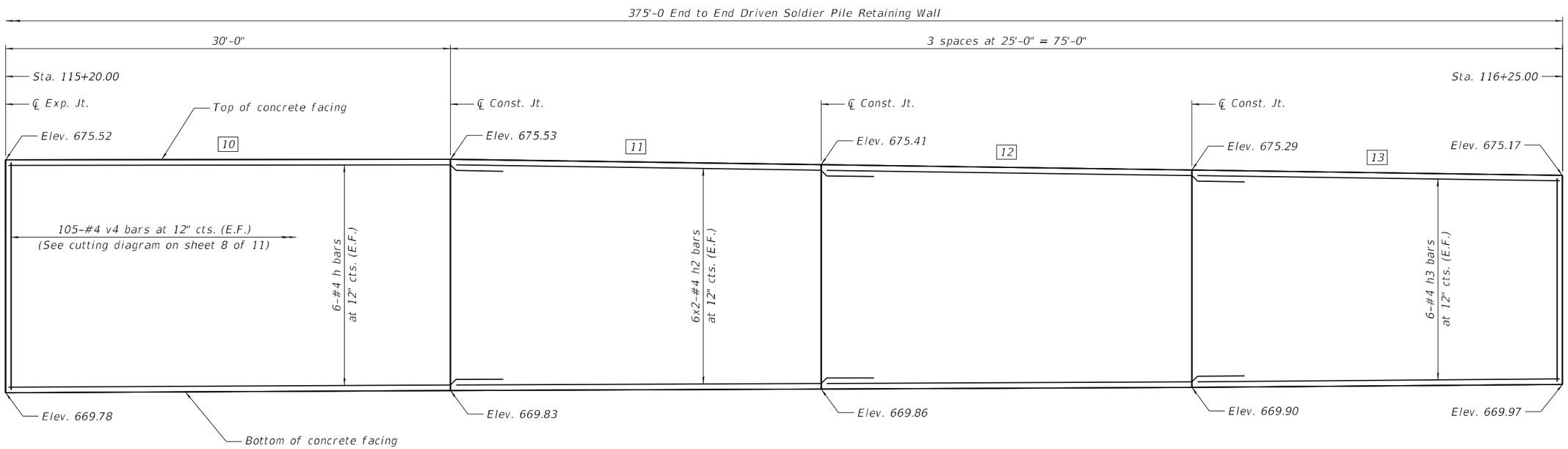

ELEVATION

(Panels 10 thru 13)

LEGEND

Panel Number [X]

(Sheet 2 of 2)

LIN ENGINEERING, LTD. Consulting Engineers Springfield, Illinois	USER NAME =	DESIGNED - CL	REVISED -	STATE OF ILLINOIS DEPARTMENT OF TRANSPORTATION	CONCRETE FACING STRUCTURE NO. 016-Z062	F.A.U. RTE.	SECTION	COUNTY	TOTAL SHEETS	SHEET NO.
		CHECKED - NB	REVISED -			3578	2019-001-R	COOK	255	195
	PLOT SCALE =	DRAWN - AJF	REVISED -					CONTRACT NO. 62H82		
	PLOT DATE = 12/23/2022	CHECKED - MTH	REVISED -		SHEET 7 OF 11 SHEETS		ILLINOIS	FED. AID PROJECT		

MODEL: Default
FILE NAME: E:\1902\Struct\Retaining Wall\Final design\CADD\CADD_Sheets\0162062-62H82-007-Concrete Facing 2.dgn

12/23/2022 10:14:57 AM

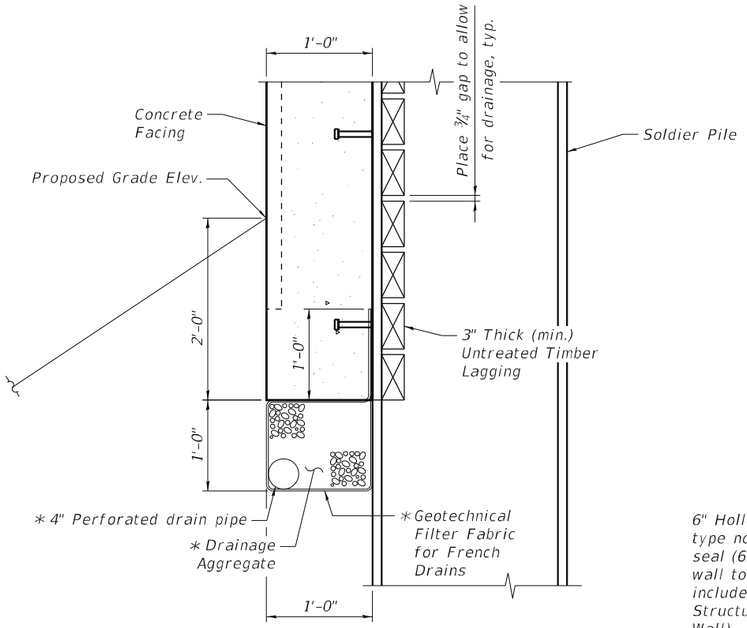

PIPE UNDERDRAIN DETAIL AT SOLDIER PILES

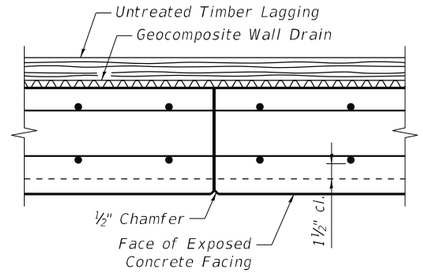

CONSTRUCTION JOINT

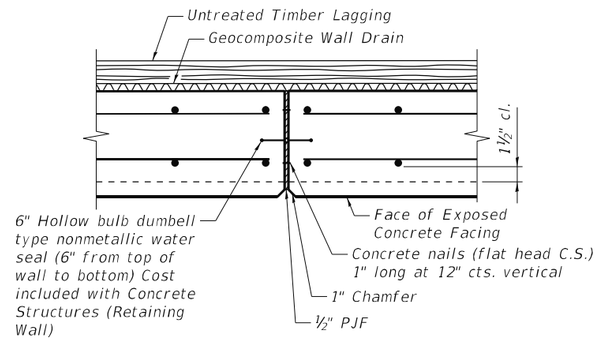

EXPANSION JOINT

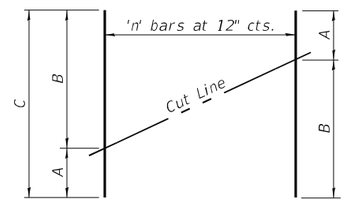

FIELD CUTTING DIAGRAM

Order bars full length. Cut as shown and use remainder of bars in other face of wall.

Bar	'n'	A	B	C
v	90	2'-9"	3'-10"	6'-7"
v1	30	3'-10"	4'-2"	8'-0"
v2	60	4'-3"	4'-10"	9'-1"
v3	90	4'-11"	5'-5"	10'-4"
v4	105	5'-0"	5'-6"	10'-6"

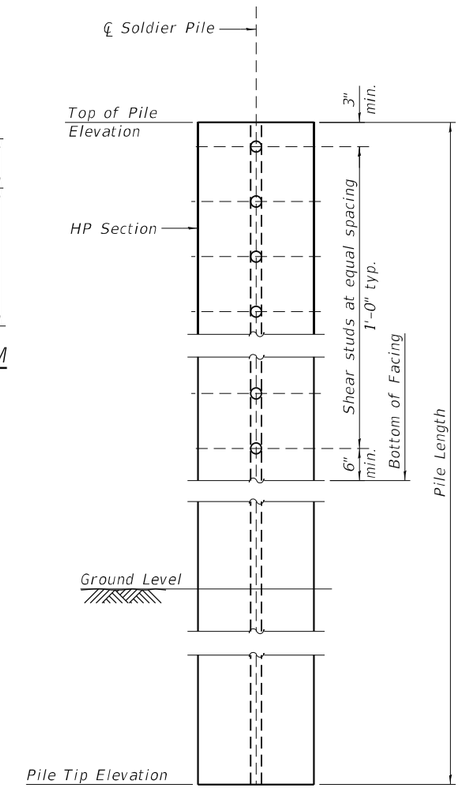

TYPICAL SOLDIER PILE ELEVATION AND SHEAR STUD CONNECTION DETAILS

* Included in the cost of Pipe Underdrains for Structures 4"

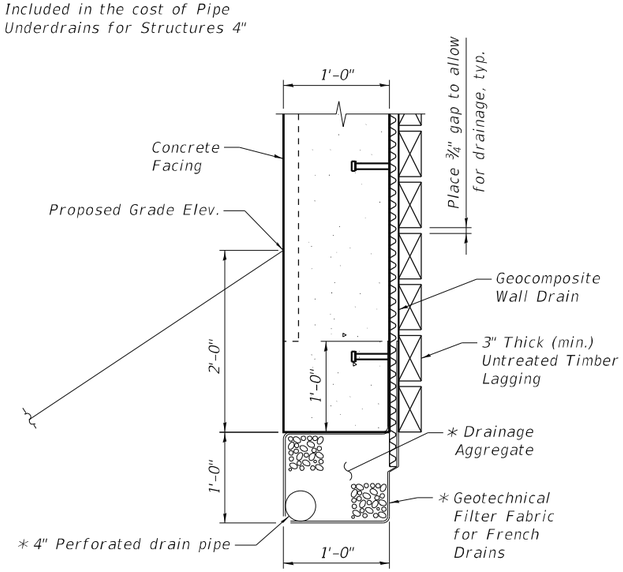

PIPE UNDERDRAIN DETAIL BETWEEN SOLDIER PILES

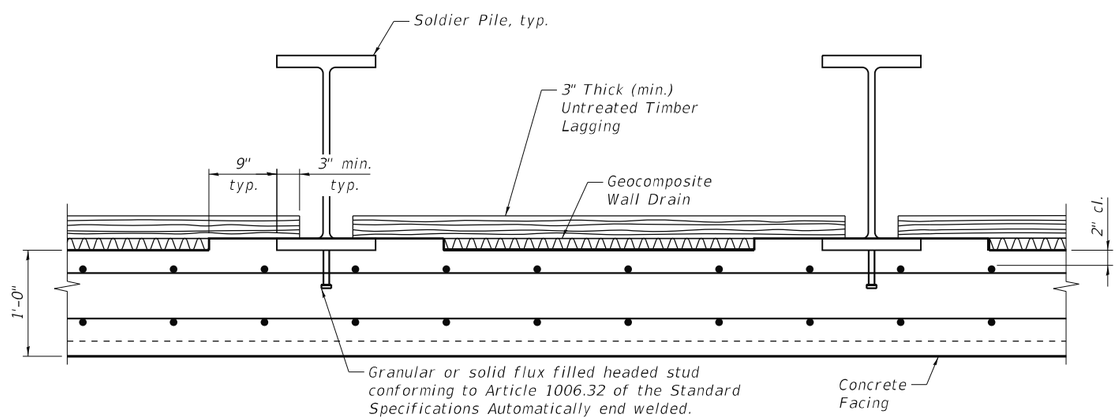

SECTION THRU DRIVEN SOLDIER PILE WALL

BILL OF MATERIAL

Bar	No.	Size	Length	Shape
h(E)	76	#4	33'-0"	
h1(E)	34	#4	29'-8"	
h2(E)	24	#4	28'-0"	
h3(E)	12	#4	24'-8"	
v(E)	90	#4	6'-7"	
v1(E)	30	#4	8'-0"	
v2(E)	60	#4	9'-1"	
v3(E)	90	#4	10'-4"	
v4(E)	105	#4	10'-6"	
Concrete Structures (Retaining Wall)			Cu. Yd.	67.8
Reinforcement Bars, Epoxy Coated			Pound	5,050

MODEL: Default
FILE NAME: E:\1902\Struct\Retaining Wall\Final design\CADD\CADD_Sheets\0162062-62H82-008-Underdrain Details.dgn

LIN ENGINEERING, LTD.
Consulting Engineers
Springfield, Illinois

USER NAME =	DESIGNED - CL	REVISED -	
	CHECKED - NB	REVISED -	
PLOT SCALE =	DRAWN - AJF	REVISED -	
PLOT DATE = 12/23/2022	CHECKED - MTH	REVISED -	

STATE OF ILLINOIS
DEPARTMENT OF TRANSPORTATION

DRIVEN SOLDIER PILE WALL DETAILS
STRUCTURE NO. 016-Z062

SHEET 8 OF 11 SHEETS

F.A.U. RTE.	SECTION	COUNTY	TOTAL SHEETS	SHEET NO.
3578	2019-001-R	COOK	255	196
		CONTRACT NO. 62H82		
		ILLINOIS	FED. AID PROJECT	

12/23/2022 10:14:57 AM

Page 1 of 1

Wang Engineering

wangeng@wangeng.com

Telephone:
Fax:

BORING LOG RW-01

WEI Job No.: 411-05-03

Client: James J. Benes & Associates
Project: IL Route 7 from 131st Street to 135th Street
Location: Cook County, IL

Datum: NAVD 88
Elevation: 673.12 ft
North: 1814539.34 ft
East: 1118229.75 ft
Station: 111+71.72
Offset: 67.52' RT

Elevation (ft)	SOIL AND ROCK DESCRIPTION	Depth (ft)	Sample No.	SPT Values (blw/6 in)	Qu (tsf)	Moisture Content (%)
672.8	Very soft, black organic SILTY CLAY LOAM; damp --TOPSOIL--		1	PUSH	2.75 P	19
	Stiff to hard, brown and gray SILTY CLAY; damp		2	PUSH	4.50 P	17
	--wet tube--	5	3	PUSH	3.75 P	22
			4	PUSH	4.50 P	15
			5	PUSH	1.25 P	20
663.3	Gray coarse SAND; wet to saturated	10	6	PUSH	NP	25
661.1	Boring terminated at 12.00 ft					
		15				
		20				

GENERAL NOTES

Begin Drilling: 02-23-2022 Complete Drilling: 02-23-2022
Drilling Contractor: Wang Testing Services Drill Rig: Geoprobe HA
Driller: A&T Logger: M. Sadowski Checked by: C. Marin
Drilling Method: 1.0" ID pneumatic hammer; Boring backfilled upon completion

WATER LEVEL DATA

While Drilling: 9.75 ft
At Completion of Drilling: 10.00 ft
Time After Drilling: NA
Depth to Water: NA

The stratification lines represent the approximate boundary between soil types; the actual transition may be gradual.

WANGENGINC 411050.GPJ WANGENG.GDT 5/1/22

Page 1 of 1

Wang Engineering

wangeng@wangeng.com

Telephone:
Fax:

BORING LOG RW-02

WEI Job No.: 411-05-03

Client: James J. Benes & Associates
Project: IL Route 7 from 131st Street to 135th Street
Location: Cook County, IL

Datum: NAVD 88
Elevation: 670.90 ft
North: 1814626.70 ft
East: 1118220.12 ft
Station: 112+50.79
Offset: 29.16' RT

Elevation (ft)	SOIL AND ROCK DESCRIPTION	Depth (ft)	Sample No.	SPT Values (blw/6 in)	Qu (tsf)	Moisture Content (%)
	14-inch thick ASPHALT --PAVEMENT--					
669.7	6-inch thick CONCRETE --PAVEMENT--					
668.7	(1.0P) Stiff, black SILTY CLAY, trace organic matter; damp --Buried TOPSOIL--		1	5 4 4	2.00 P	25
	Very stiff, brown and gray SILTY CLAY; damp --RDR 2--	5	2	5 3 3	2.05 B	24
665.4	Medium stiff, brown and gray CLAY to SILTY CLAY; damp to moist --RDR 2--		3	3 3 5	0.66 B	26
		10	4	3 4 6	0.82 B	25
660.4	Stiff to very stiff, gray SILTY CLAY to SILTY CLAY LOAM, trace gravel; damp --RDR 2--		5	5 6 8	2.38 B	19
		15	6	4 5 5	1.39 B	22
			7	4 5 5	2.13 B	15
650.9	Boring terminated at 20.00 ft	20	8	3 3 6	1.72 B	16

GENERAL NOTES

Begin Drilling: 02-21-2022 Complete Drilling: 02-21-2022
Drilling Contractor: Wang Testing Services Drill Rig: D25 ATV [93%]
Driller: A&T Logger: M. Sadowski Checked by: C. Marin
Drilling Method: 2.25" ID HSA; Boring backfilled upon completion

WATER LEVEL DATA

While Drilling: Dry
At Completion of Drilling: Dry
Time After Drilling: NA
Depth to Water: NA

The stratification lines represent the approximate boundary between soil types; the actual transition may be gradual.

WANGENGINC 411050.GPJ WANGENG.GDT 5/1/22

Page 1 of 1

Wang Engineering

wangeng@wangeng.com

Telephone:
Fax:

BORING LOG RW-02-HA

WEI Job No.: 411-05-03

Client: James J. Benes & Associates
Project: IL Route 7 from 131st Street to 135th Street
Location: Cook County, IL

Datum: NAVD 88
Elevation: 672.17 ft
North: 1814606.75 ft
East: 1118251.97 ft
Station: 112+42.67
Offset: 65.85' RT

Elevation (ft)	SOIL AND ROCK DESCRIPTION	Depth (ft)	Sample No.	SPT Values (blw/6 in)	Qu (tsf)	Moisture Content (%)
671.4	9-inch thick, stiff, black organic SILTY CLAY LOAM --TOPSOIL--		1	PUSH	1.50 P	27
	Stiff, brown and gray CLAY to SILTY CLAY; damp --L_L(%)=33, P_I(%)=17-- --%Gravel=2.3-- --%Sand=10.2-- --%Silt=59.8-- --%Clay=27.7--		2	PUSH	1.25 P	20
668.2	Very stiff to hard, brown and gray SILTY CLAY to SILTY CLAY LOAM, trace gravel; damp	5	3	PUSH	4.00 P	16
			4	PUSH	3.75 P	16
664.2	Boring terminated at 8.00 ft					
		10				
		15				
		20				

GENERAL NOTES

Begin Drilling: 02-23-2022 Complete Drilling: 02-23-2022
Drilling Contractor: Wang Testing Services Dril Rig: Geoprobe HA
Driller: A&T Logger: M. Sadowski Checked by: C. Marin
Drilling Method: 1.0" ID pneumatic hammer; Boring backfilled upon completion

WATER LEVEL DATA

While Drilling: Dry
At Completion of Drilling: Dry
Time After Drilling: NA
Depth to Water: NA

The stratification lines represent the approximate boundary between soil types; the actual transition may be gradual.

WANGENGINC 411050.GPJ WANGENG.GDT 5/1/22

(Sheet 1 of 3)

MODEL: Default
FILE NAME: E:\1902\Struct\Retaining Wall\Final design\CADD\CADD_Sheets\0162062-62H82-011-Boring 1.dgn

LIN ENGINEERING, LTD.
Consulting Engineers
Springfield, Illinois

USER NAME =	DESIGNED - CL	REVISED -	
	CHECKED - NB	REVISED -	
PLOT SCALE =	DRAWN - AJF	REVISED -	
PLOT DATE = 12/23/2022	CHECKED - MTH	REVISED -	

STATE OF ILLINOIS
DEPARTMENT OF TRANSPORTATION

BORING LOGS
STRUCTURE NO. 016-Z062

SHEET 9 OF 11 SHEETS

F.A.U. RTE.	SECTION	COUNTY	TOTAL SHEETS	SHEET NO.
3578	2019-001-R	COOK	255	197
		CONTRACT NO. 62H82		
		ILLINOIS	FED. AID PROJECT	

12/23/2022 10:14:58 AM

BORING LOG RW-03

Page 1 of 1

Wang Engineering
wangeng@wangeng.com
Telephone:
Fax:

WEI Job No.: 411-05-03
Client: James J. Benes & Associates
Project: IL Route 7 from 131st Street to 135th Street
Location: Cook County, IL

Datum: NAVD 88
Elevation: 670.58 ft
North: 1814703.23 ft
East: 1118253.92 ft
Station: 113+34.22
Offset: 35.34' RT

Elevation (ft)	SOIL AND ROCK DESCRIPTION	Sample Type / recovery	Sample No.	SPT Values (blw/6 in)	Qu (tsf)	Moisture Content (%)
670.0	7-inch thick gray SANDY GRAVEL					
	--FILL--					
	Hard, brown and gray CLAY LOAM, trace gravel; damp		1	6 9 9	5.58 B	15
	--FILL--					
667.6	--RDR 2--					
	Stiff to hard, brown and gray to gray SILTY CLAY, trace gravel; damp		2	3 5 9	5.33 B	19
	--RDR 2--					
	--gray--		3	3 3 4	1.80 B	18
			4	5 4 4	1.15 B	15
660.1	Stiff, gray SILTY LOAM to SILTY CLAY LOAM; wet to saturated					
	--silt seams--		5	3 2 2	1.25 P	20
	--wet spoon--		6	3 3 4	1.31 B	13
655.1	Loose, gray fine to medium SAND; wet					
654.3	Stiff to very stiff, gray SILTY CLAY to SILTY CLAY LOAM, trace to little gravel; damp to moist		7	3 3 3	2.25 P	14
	--RDR 2--		8	3 4 6	1.64 B	18

Elevation (ft)	SOIL AND ROCK DESCRIPTION	Sample Type / recovery	Sample No.	SPT Values (blw/6 in)	Qu (tsf)	Moisture Content (%)
			9	3 4 5	0.57 B	21
			10	3 5 7	1.07 B	14
645.6	Boring terminated at 25.00 ft					

GENERAL NOTES

Begin Drilling: 02-15-2022 Complete Drilling: 02-15-2022
Drilling Contractor: Wang Testing Services Drill Rig: GEOPROBE
Driller: J&M Logger: M. Sadowski Checked by: C. Marin
Drilling Method: 2.25" ID HSA; Boring backfilled upon completion

WATER LEVEL DATA

While Drilling: 10.50 ft
At Completion of Drilling: Dry
Time After Drilling: NA
Depth to Water: NA

The stratification lines represent the approximate boundary between soil types; the actual transition may be gradual.

WANGENGINC 411-05-03.GPJ WANGENG.GDT 5/19/22

BORING LOG RW-04

Page 1 of 1

Wang Engineering
wangeng@wangeng.com
Telephone:
Fax:

WEI Job No.: 411-05-03
Client: James J. Benes & Associates
Project: IL Route 7 from 131st Street to 135th Street
Location: Cook County, IL

Datum: NAVD 88
Elevation: 668.65 ft
North: 1814804.43 ft
East: 1118295.80 ft
Station: 114+43.61
Offset: 40.87' RT

Elevation (ft)	SOIL AND ROCK DESCRIPTION	Sample Type / recovery	Sample No.	SPT Values (blw/6 in)	Qu (tsf)	Moisture Content (%)
667.7	11-inch thick gray SANDY GRAVEL; damp to wet					
	Very stiff to hard, brown and gray SILTY CLAY; damp		1	6 7 7	5.33 B	19
	--RDR 2--		2	4 6 7	3.12 B	20
663.2	Stiff, gray SILTY CLAY LOAM to SILTY LOAM; damp					
	--RDR 2--		3	3 4 5	1.07 B	16
660.7	Stiff to very stiff, gray SILTY CLAY; damp					
	--RDR 2--		4	4 4 6	2.62 B	18
			5	5 6 5	3.36 B	16
			6	4 2 1	1.23 B	18
653.7	Medium dense, gray coarse SAND; saturated					
	--RDR 2--					
652.2	Very stiff, gray SILTY CLAY, trace gravel; damp		7	5 4 6	3.36 B	15
	--RDR 2--		8	4 4 5	2.13 B	16

Elevation (ft)	SOIL AND ROCK DESCRIPTION	Sample Type / recovery	Sample No.	SPT Values (blw/6 in)	Qu (tsf)	Moisture Content (%)
648.2	Very stiff, gray CLAY; damp					
	--RDR 2--		9	4 5 7	2.21 B	20
			10	3 6 8	2.30 B	21
643.7	Boring terminated at 25.00 ft					

GENERAL NOTES

Begin Drilling: 02-21-2022 Complete Drilling: 02-21-2022
Drilling Contractor: Wang Testing Services Drill Rig: D25 ATV [93%]
Driller: A&T Logger: M. Sadowski Checked by: C. Marin
Drilling Method: 2.25" ID HSA; Boring backfilled upon completion

WATER LEVEL DATA

While Drilling: 15.00 ft
At Completion of Drilling: 25.00 ft
Time After Drilling: NA
Depth to Water: NA

The stratification lines represent the approximate boundary between soil types; the actual transition may be gradual.

WANGENGINC 411-05-03.GPJ WANGENG.GDT 5/19/22

BORING LOG RW-05

Page 1 of 1

Wang Engineering
wangeng@wangeng.com
Telephone:
Fax:

WEI Job No.: 411-05-03
Client: James J. Benes & Associates
Project: IL Route 7 from 131st Street to 135th Street
Location: Cook County, IL

Datum: NAVD 88
Elevation: 670.69 ft
North: 1814889.29 ft
East: 1118316.52 ft
Station: 115+30.50
Offset: 31.93' RT

Elevation (ft)	SOIL AND ROCK DESCRIPTION	Sample Type / recovery	Sample No.	SPT Values (blw/6 in)	Qu (tsf)	Moisture Content (%)
669.9	10-inch thick gray SANDY GRAVEL; damp to moist					
	Hard, brown and gray CLAY LOAM to SILTY CLAY LOAM, trace gravel; damp		1	4 4 5	5.66 B	15
	--FILL--					
	--RDR 2--		2	4 3 11	10.25 B	16
665.2	Very stiff, brown and gray CLAY to SILTY CLAY; damp					
	--RDR 2--		3	4 5 7	3.77 B	22
	--L_L(%)=36, P_I(%)=18--		4	3 4 3	3.28 B	25
	--%Gravel=2.0--					
	--%Sand=17.4--					
	--%Silt=51.7--					
660.2	--%Clay=28.9--					
	Very stiff to hard, brown to gray to gray SILTY CLAY; damp		5	3 7 8	4.67 B	17
	--RDR 2--					
	--gray--		6	3 4 7	2.54 B	16
655.2	Medium dense, gray SANDY GRAVEL; moist to wet					
654.4	Stiff, gray SILTY CLAY LOAM, trace gravel; damp		7	4 7 9	1.80 B	15
	--RDR 2--		8	3 4 4	1.39 B	16

Elevation (ft)	SOIL AND ROCK DESCRIPTION	Sample Type / recovery	Sample No.	SPT Values (blw/6 in)	Qu (tsf)	Moisture Content (%)
650.2	Very stiff, gray CLAY; damp					
	--RDR 2--		9	3 5 7	2.30 B	20
647.7	Stiff, gray SILTY CLAY, trace gravel; damp					
	--RDR 2--		10	5 6 8	1.56 B	15
645.7	Boring terminated at 25.00 ft					

GENERAL NOTES

Begin Drilling: 02-21-2022 Complete Drilling: 02-21-2022
Drilling Contractor: Wang Testing Services Dril Rig: D25 ATV [93%]
Driller: A&T Logger: M. Sadowski Checked by: C. Marin
Drilling Method: 2.25" ID HSA; Boring backfilled upon completion

WATER LEVEL DATA

While Drilling: Dry
At Completion of Drilling: Dry
Time After Drilling: NA
Depth to Water: NA

The stratification lines represent the approximate boundary between soil types; the actual transition may be gradual.

WANGENGINC 411-05-03.GPJ WANGENG.GDT 5/19/22

(Sheet 2 of 3)

MODEL: Default
FILE NAME: E:\1902\Struct\Retaining Wall\Final design\CADD\CADD_Sheets\0162062-62H82-012-Boring 2.dgn

LIN ENGINEERING, LTD.
Consulting Engineers
Springfield, Illinois

USER NAME =	DESIGNED - CL	REVISED -	
	CHECKED - NB	REVISED -	
PLOT SCALE =	DRAWN - AJF	REVISED -	
PLOT DATE = 12/23/2022	CHECKED - MTH	REVISED -	

STATE OF ILLINOIS
DEPARTMENT OF TRANSPORTATION

BORING LOGS
STRUCTURE NO. 016-Z062

SHEET 10 OF 11 SHEETS

F.A.U. RTE.	SECTION	COUNTY	TOTAL SHEETS	SHEET NO.
3578	2019-001-R	COOK	255	198
		CONTRACT NO. 62H82		
		ILLINOIS	FED. AID PROJECT	

12/23/2022 10:15:01 AM

Wang Engineering
wangeng@wangeng.com
Telephone:
Fax:

BORING LOG RW-06

WEI Job No.: 411-05-03

Client: James J. Benes & Associates
Project: IL Route 7 from 131st Street to 135th Street
Location: Cook County, IL

Datum: NAVD 88
Elevation: 670.35 ft
North: 1814971.79 ft
East: 1118347.32 ft
Station: 116+18.56
Offset: 33.29' RT

Profile	Elevation (ft)	SOIL AND ROCK DESCRIPTION	Depth (ft)	Sample Type / recovery	Sample No.	SPT Values (blw/6 in)	Qu (tsf)	Moisture Content (%)
		9-inch thick gray SANDY GRAVEL; damp to moist						
	669.6	Medium dense, brown and gray LOAM, some gravel; damp --FILL-- --RDR 2--			1	8 7 4	NP	10
	667.9	Soft to stiff, brown and gray CLAY to SILTY CLAY LOAM, trace organic matter; damp --RDR 2--	5		2	2 2 2	1.00 P	30
					3	1 2 1	0.74 B	36
			10		4	1 1 2	0.33 B	31
	659.9	Stiff, brown and gray SILTY CLAY to SILTY CLAY LOAM, trace gravel; damp --RDR 2--			5	2 3 4	1.89 B	19
	657.4	Medium stiff, brown and gray SILTY CLAY LOAM toSILTY LOAM, trace gravel; moist --RDR 2--	15		6	3 3 4	0.50 P	26
	654.9	Hard, gray SILTY CLAY; damp --RDR 2--			7	4 4 7	4.59 B	19
	652.4	Very stiff, gray CLAY; damp --RDR 2--	20		8	4 7 8	2.95 B	21
	649.9	Very stiff, gray SILTY CLAY, trace gravel; damp --RDR 2--			9	5 5 6	NR	
	645.4	Boring terminated at 25.00 ft	25		10	3 5 5	2.13 B	15
			30					
			35					
			40					

GENERAL NOTES

Begin Drilling: 02-23-2022 Complete Drilling: 02-23-2022
Drilling Contractor: Wang Testing Services Drill Rig: D25 ATV [93%]
Driller: A&T Logger: M. Sadowski Checked by: C. Marin
Drilling Method: 2.25" ID HSA; Boring backfilled upon completion

WATER LEVEL DATA

While Drilling: Dry
At Completion of Drilling: Dry
Time After Drilling: NA
Depth to Water: NA

The stratification lines represent the approximate boundary between soil types; the actual transition may be gradual.

WANGENGINC 411050S.GPJ WANGENG.GDT 6/13/22

MODEL: Default
FILE NAME: E:\1902\Struct\Retaining Wall\Final design\CADD\CADD_Sheets\0162062-62HB2-013-Boring 3.dgn

(Sheet 3 of 3)

LIN ENGINEERING, LTD.
Consulting Engineers
Springfield, Illinois

USER NAME =	DESIGNED - CL	REVISED -	
	CHECKED - NB	REVISED -	
PLOT SCALE =	DRAWN - AJF	REVISED -	
PLOT DATE = 12/23/2022	CHECKED - MTH	REVISED -	

STATE OF ILLINOIS
DEPARTMENT OF TRANSPORTATION

BORING LOGS
STRUCTURE NO. 016-Z062

SHEET 11 OF 11 SHEETS

F.A.U. RTE.	SECTION	COUNTY	TOTAL SHEETS	SHEET NO.
3578	2019-001-R	COOK	255	199

CONTRACT NO. 62H82

ILLINOIS | FED. AID PROJECT

12/23/2022 10:15:04 AM

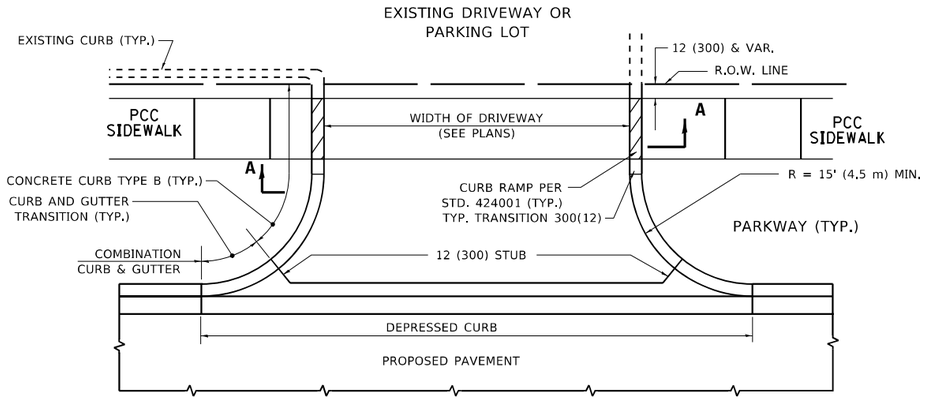

WITH CONCRETE CURB, TYPE B

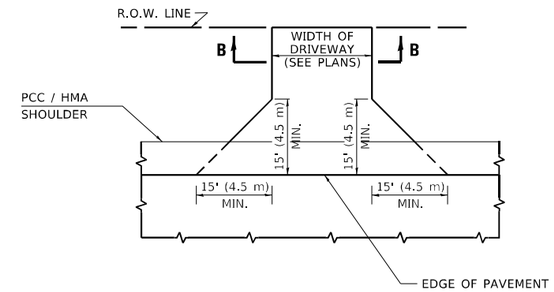

ADJACENT TO PCC /HMA SHOULDER

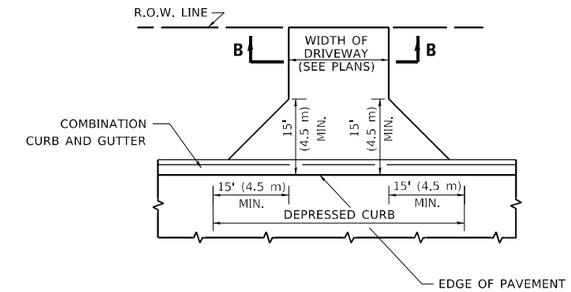

ADJACENT TO CURB AND GUTTER

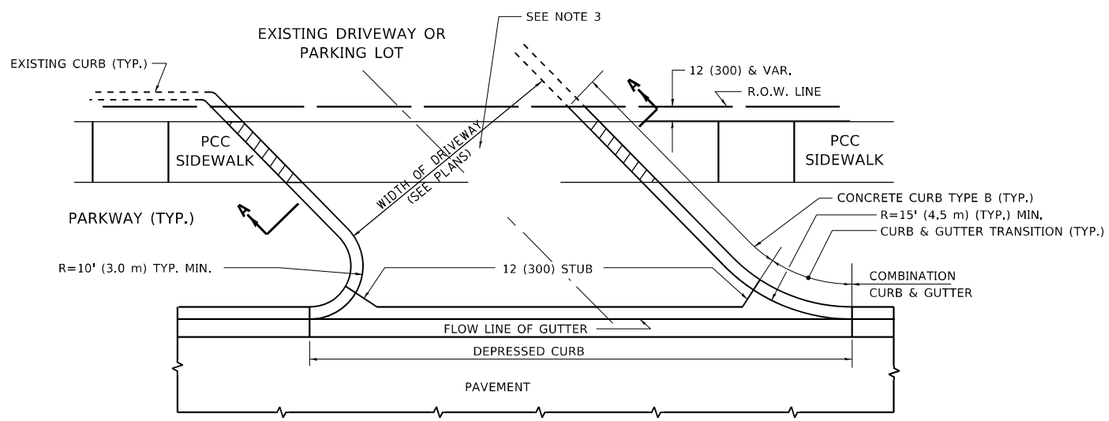

WITH CONCRETE CURB, TYPE B

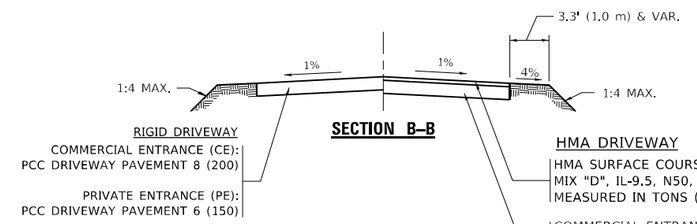

SECTION B–B

RIGID DRIVEWAY

COMMERCIAL ENTRANCE (CE):
PCC DRIVEWAY PAVEMENT 8 (200)

PRIVATE ENTRANCE (PE):
PCC DRIVEWAY PAVEMENT 6 (150)

HMA DRIVEWAY

HMA SURFACE COURSE,
MIX "D", IL-9.5, N50, 2 (50)
MEASURED IN TONS (METRIC TONS)

COMMERCIAL ENTRANCE (CE):
HMA BASE COURSE., 8 (200)
MEASURED IN SQ. YD. (m^2).

PRIVATE ENTRANCE (PE):
HMA BASE COURSE., 6 (150)
MEASURED IN SQ. YD. (m^2).

RURAL FIELD ENTRANCE (FE)

HMA SURFACE COURSE,
MIX "D", IL-95, N50, 2 (50)
MEASURED IN TONS (METRIC TONS)

AGGREGATE BASE COURSE., TYPE B, 8 (200)
MEASURED IN SQ. YD. (m^2).

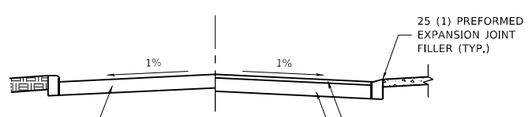

SECTION A–A

RIGID DRIVEWAY

COMMERCIAL ENTRANCE (CE):
PCC DRIVEWAY PAVEMENT 8 (200)
MEASURED IN SQ. YD. (m^2)

PRIVATE ENTRANCE (PE):
PCC DRIVEWAY PAVEMENT 6 (150
MEASURED IN SQ. YD. (m^2)

HMA DRIVEWAY

HMA SURFACE COURSE,
MIX "D", IL-9.5, N50, 2 (50)
MEASURED IN TONS (METRIC TONS)

COMMERCIAL ENTRANCE (CE):
HMA BASE COURSE, 8 (200)
MEASURED IN SQ. YD. (m^2).

PRIVATE ENTRANCE (PE):
HMA BASE COURSE, 6 (150)
MEASURED IN SQ. YD. (m^2).

GENERAL NOTES

1. DRIVEWAY SLOPES, LOCATIONS, & GEOMETRIC LAYOUT SHALL BE IN ACCORDANCE WITH THE LATEST EDITION OF THE "HANDBOOK FOR POLICY ON PERMITS FOR ACCESS DRIVEWAYS TO STATE HIGHWAYS". FOR FURTHER LAYOUT REQUIREMENTS, REFER TO ILLUSTRATIONS IN THE PERMIT HANDBOOK. DRIVEWAYS SHALL BE REPLACED IN KIND, UNLESS OTHERWISE NOTED ON THE PLANS.

2. COMMERCIAL DRIVEWAYS SHALL BE CONSTRUCTED WITH CONCRETE CURB, TYPE B RETURNS EXCEPT WHEN THE SIDEWALK EDGE IS 4 FEET (1.2 METERS) OR LESS FROM THE BACK OF CURB, CONSTRUCT A FLARE DRIVEWAY WITHOUT CURB.

ALL DIMENSIONS ARE IN INCHES (MILLIMETERS) UNLESS OTHERWISE NOTED.

MODEL: Default
FILE NAME: W:\dist\sna\2\x34bd01.dgn

USER NAME = demanchelt	DESIGNED - R. SHAH	REVISED - R. BORO 06-11-08	STATE OF ILLINOIS DEPARTMENT OF TRANSPORTATION
	DRAWN -	REVISED - R. BORO 09-06-11	
PLOT SCALE = 100.0000 ' / in.	CHECKED -	REVISED - K. SMITH 08-28-19	
PLOT DATE = 2/2/2022	DATE - 11-04-95	REVISED - K. SMITH 02-01-22	

DRIVEWAY DETAILS – DISTANCE BETWEEN R.O.W. AND FACE OF CURB & EDGE OF SHOULDER ≥15'(4.5m)

SCALE: NONE | SHEET 1 OF 1 SHEETS | STA. TO STA.

F.A.U. RTE.	SECTION	COUNTY	TOTAL SHEETS	SHEET NO.
3578	2019-001-R	COOK	255	200
BD400–01 (BD–01)		CONTRACT NO. 62H82		
		ILLINOIS FED. AID PROJECT		