STATE OF ILLINOIS
DEPARTMENT OF TRANSPORTATION

FAP	SECTION	COUNTY	TOTAL SHEETS	SHEET NO.
337	20R-5	LAKE	562	432
FED. ROAD DIST. NO. 7	ILLINOIS	FED. AID PROJECT-		

SHEET NO. 6
9 SHEETS

D-91-552-99 Contract No. 60881

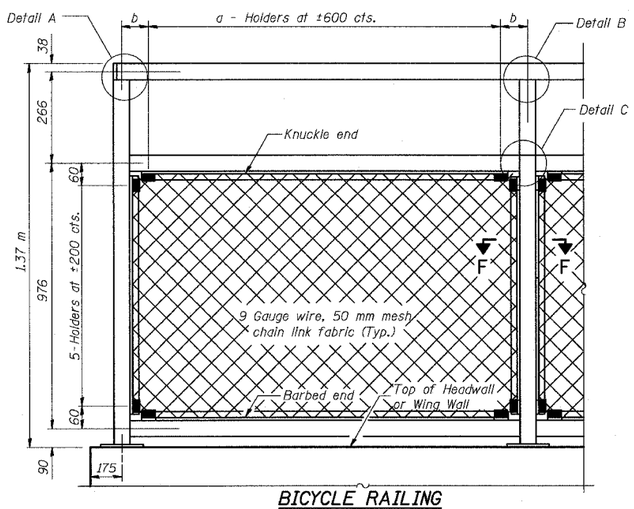

BICYCLE RAILING

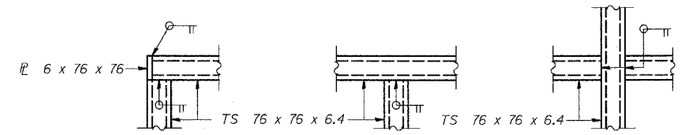

DETAIL A DETAIL B DETAIL C

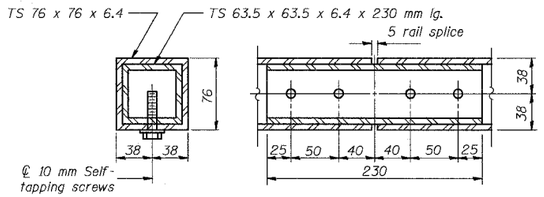

RAIL SPLICE

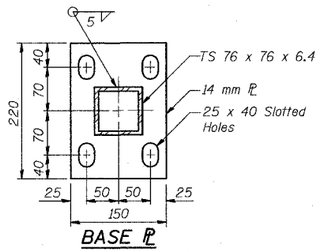

BASE PL

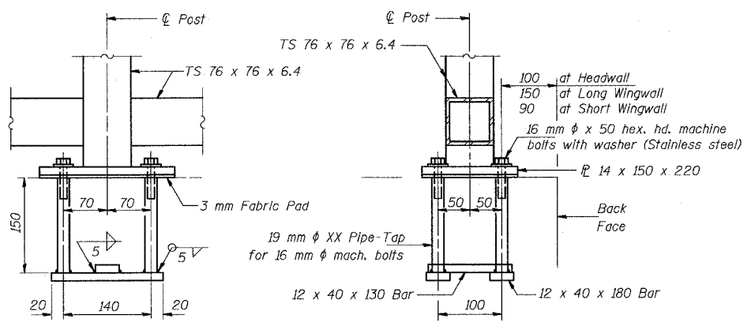

ANCHOR BOLT DETAILS

(In lieu of the cast-in-place anchor device shown, the Contractor has the option of drilling and epoxy grouting M16 anchor rods for the connections on top of the parapets. Embedment shall be according to the manufacturer's specifications.)

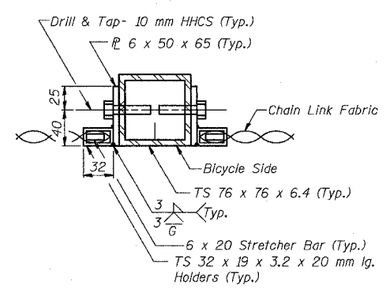

SECTION F-F

NOTES

1. Railing shall be according to Section 509 of the Standard Specifications, except as noted, and will be paid for at the Contract Unit Price per meter for Bicycle Railing.
2. The 9 gauge fabric ties shall be according to Article 1006.27 (d) of the Standard Specifications.
3. Installation of the chain link fabric shall be according to Section 664 of the Standard Specifications.
4. Hollow structural steel tubing shall conform to the requirements of ASTM designation A 500, Grade B, structural steel tubing.
5. All other steel shapes and plates shall conform to the requirements of AASHTO M 270M Grade 250.
6. The chain link fabric shall be placed along Bicycle Side as shown on Section F-F.
7. Stretcher bars shall be used at all four sides of each panel.
8. If the option of drilling and epoxy grouting the anchor rods is chosen, the Contractor shall use the capsule or the adhesive cartridge type anchor rods that have been previously tested and given a prior approval by the Department. The Contractor shall install these anchor rods in pre-drilled holes according to the manufacturer's recommendations and procedures. The capsule or the adhesive cartridge shall be sealed with premeasured amounts of the adhesive chemical.
9. Space reinforcement to miss anchor rods.
10. All dimensions are in millimeters (mm) except as noted.
11. All posts, railing, splices, anchor devices, and bent plates shall be galvanized after shop fabrication according to AASHTO M 111 and ASTM A 385. All bolts, nuts, washers and anchor rods shall be galvanized according to AASHTO M 232 except stainless steel bolts as noted.
12. Vent holes for galvanizing shall be placed in the posts and rails at locations that will not allow the accumulation of moisture in the members.
13. The chain link fabric shall conform to the requirements of Article 1006.27(a)(1)a, b or c of the Standard Specifications.

HOLDER TABLE

Post Spacing (m)	a (No.)	b (mm)
2.520	5	100
1.900	4	100
1.685	4	100

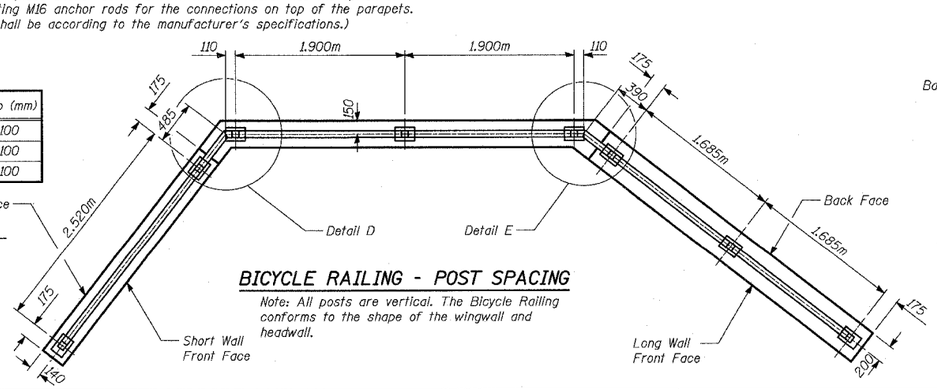

BICYCLE RAILING - POST SPACING

Note: All posts are vertical. The Bicycle Railing conforms to the shape of the wingwall and headwall.

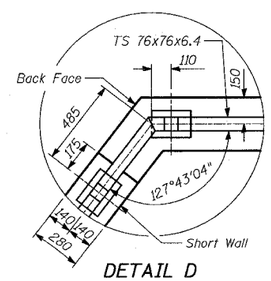

DETAIL D

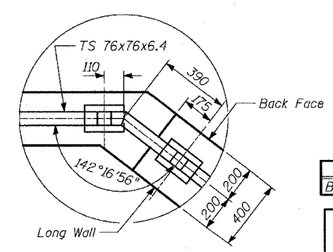

DETAIL E

BILL OF MATERIAL

Item	Unit	Quantity
Bicycle Railing	METER	10.80

TY·LIN INTERNATIONAL

DESIGNED	DJR
CHECKED	MI
DRAWN	DJR
CHECKED	MI

DATE 03-22-2004

BICYCLE RAILING

IL ROUTE 22 OVER
KILDEER CREEK
FAP 337 SECTION 20R-5
LAKE COUNTY
STA. 100+978.642
S.N. 049-C003

...\structur\single\sinrailing.dgn 04/12/2004 11:44:34 AM