CONTRACT NO. 62030

F.A.P. RTE.	SECTION	COUNTY	TOTAL SHEETS	SHEET NO.
337	20 WRS-6	LAKE	318	15
STA. 10+450		TO STA. 10+750		
FED. ROAD DIST. NO.		ILLINOIS	FED. AID PROJECT	

LEGEND
- H FIRE HYDRANT TO BE MOVED
- ADJ STRUCTURE TO BE ADJUSTED
- F STRUCTURE TO BE FILLED
- R STRUCTURE TO BE REMOVED
- REC STRUCTURE TO BE RECONSTRUCTED
- PIPE ABANDONMENT (OR REMOVAL WHERE REQ'D)

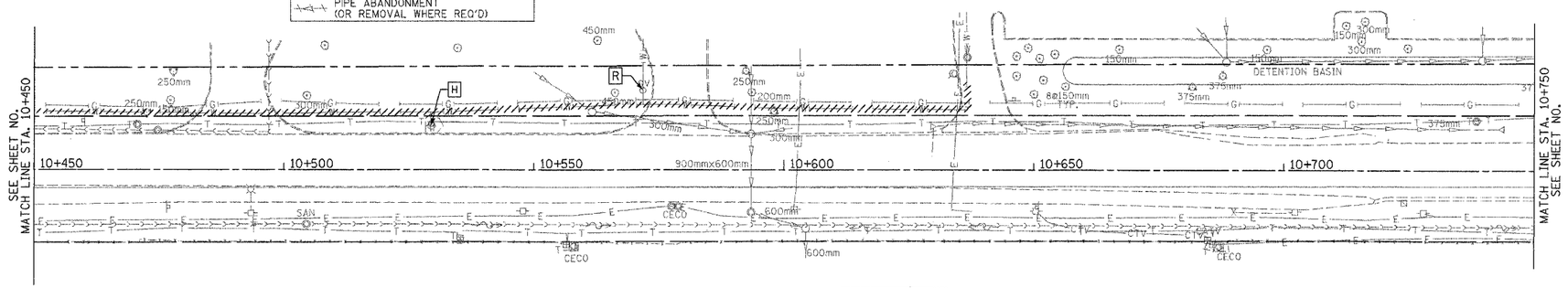

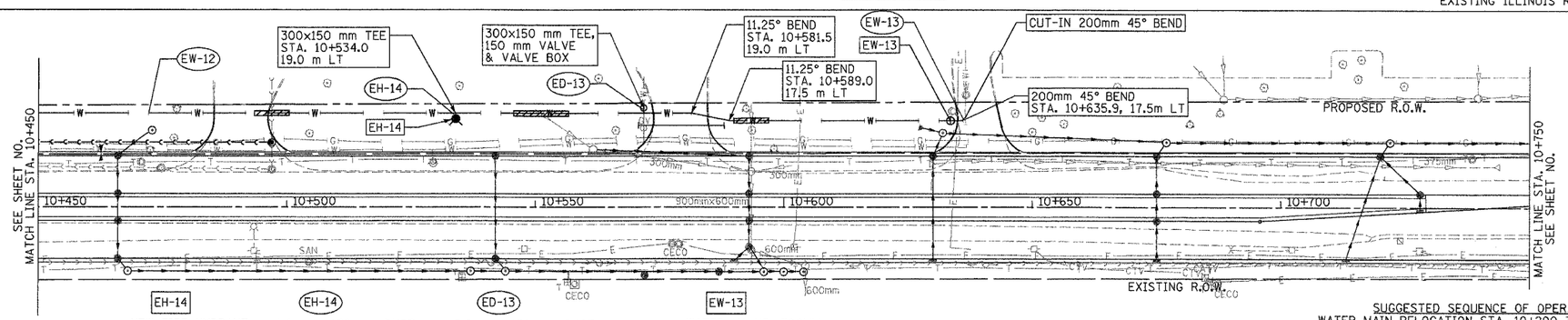

STRUCTURE/ HYDRANT/ FITTING

PIPE

SCALE:
HORIZ. 1:500
VERT. 1:50

GRAEF, ANHALT, SCHLOEMER & ASSOCIATES, INC.
ENGINEERS & SCIENTISTS
8501 W. Higgins Road, Suite 280
Chicago, Illinois 60631
(773) 399-0112

EH-14	NEW FIRE HYDRANT LOCATION STA. 10+534.0 18.0 m LT
EH-14	1.0 m - 150 mm DUCT. IRON WATER MAIN
ED-13	2.0 m - 150 mm DUCT. IRON WATER MAIN CONNECT TO EXISTING SERVICE AT PROPERTY LINE
EW-13	WATER VALVE, 300MM IN VALVE VAULT, TY. A, 1.5M DIA. TY. 1 FR & CL STA. 10+633.5, 17.5 m LT RIM=263.36

SUGGESTED SEQUENCE OF OPERATIONS
WATER MAIN RELOCATION STA. 10+200 TO STA. 10+650

1. CLOSE EXISTING VALVE AT STA. 10+636, 23m LT
2. CONSTRUCT 300 mm WATER MAIN FROM WEST PROJECT LIMIT TO VALVE EW-13, INCLUDING CONNECTION AT STA. 10+636.5 LT.
3. PRESSURE TEST, DISINFECT, AND FLUSH NEW WATER MAIN AS REQUIRED. TRANSFER WATER SERVICES.
4. REOPEN EXISTING VALVE AT STA. 10+636, 23m LT.

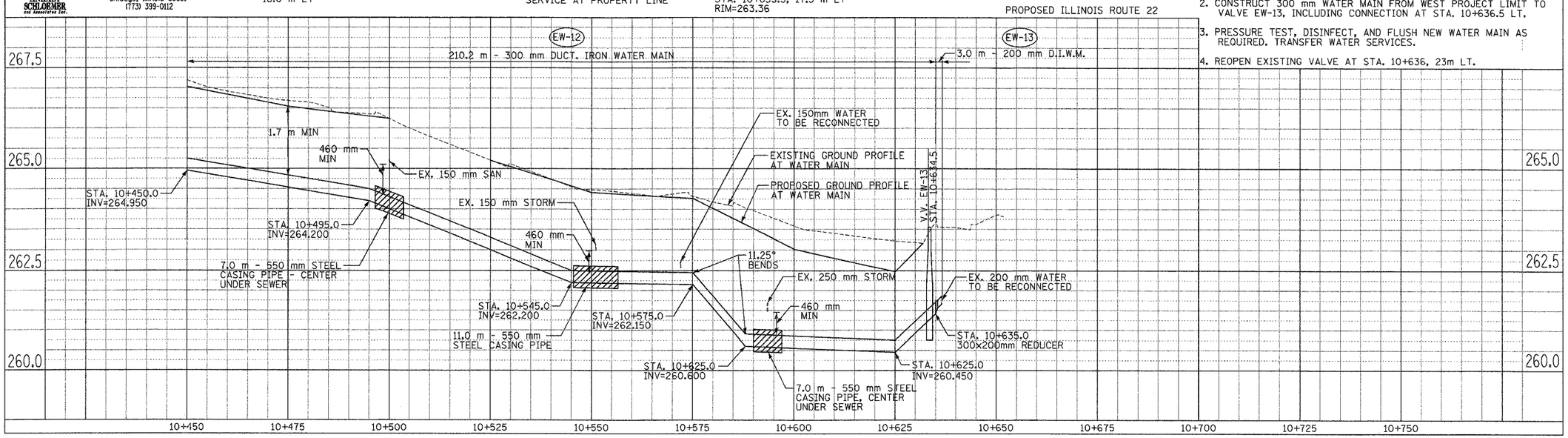

WATER MAIN RELOCATION IL. RTE. 22 STA. 10+450 TO STA. 10+750

FILE: H:\Jobs2003\20034005\CAD\IDOT_Trans\dgn\00\east\pp2-WAT.dgn
DATE: 06-Mar-05 10:35