CONTRACT NO. 62030

F.A. RTE.	SECTION	COUNTY	TOTAL SHEETS	SHEET NO.
337	20 WR-6	LAKE	318	105
STA.		TO STA.		
FED. ROAD DIST. NO.		ILLINOIS	FED. AID PROJECT	

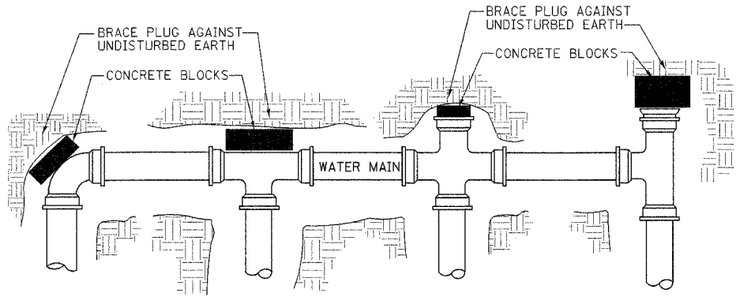

NOTES:

1. PROVIDE THRUST BLOCKING TO PREVENT MOVEMENT OF LINES UNDER PRESSURE AT ALL BENDS, TEES, CAPS, VALVES, HYDRANTS, AND AT POINTS SPECIFIED BY THE ENGINEER.
2. ALL BLOCKING SHALL BE MADE WITH CONCRETE BLOCKS AGAINST UNDISTURBED VERTICAL EARTH SURFACE.
3. ALTERNATE METHODS OF RESTRAINING WATER MAIN COMPONENTS SHALL REQUIRE THE APPROVAL OF THE VILLAGE ENGINEER.
4. NO WOOD IS ALLOWED IN THE THRUST BLOCKS.
5. MEGALUGS SERIES 1100 OR APPROVED EQUAL ARE REQUIRED AT ALL JOINTS.

THRUST BLOCK

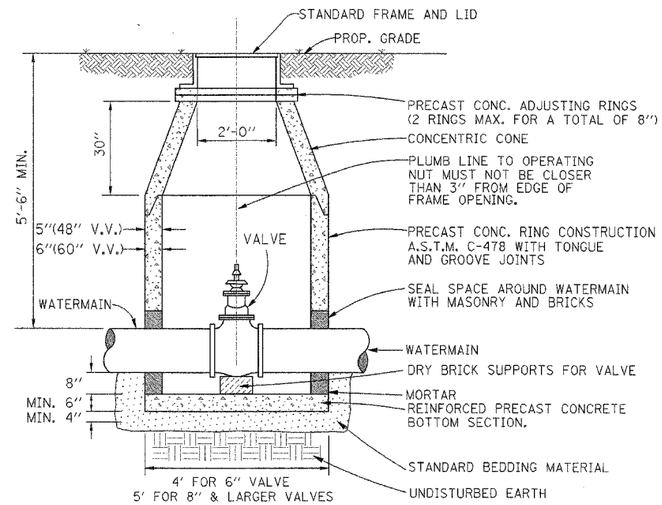

NOTES:

1. WATER MAIN 8 INCHES OR MORE IN DIAMETE SHALL REQUIRE A 60 INCH DIAMETER VALVE VAULT: WATER MAIN LESS THAN 8 INCHES IN DIAMETER SHALL REQUIRE A 48 INCH VALVE VAULT
2. INSTALL MINIMUM 4" OF SELECTED GRANULAR BACKFILL UNDER STRUCTURE BOTTOM SECTION AND FILL ENTIRE EXCAVATION ALL AROUND STRUCTURE UP TO C.L. OF PIPE WITH BEDDING MATERIAL.
3. PIPE OPENINGS SHALL BE CAST INTO WALL.
4. STRUCTURE FRAME, ADJUSTING RINGS, AND ALL CONCRETE SECTIONS SHALL BE SET ON AND SEALED WITH BITUMINOUS MASTIC JOINT MATERIAL.
5. FILL LUG HOLES WITH BITUMINOUS JOINING COMPOUND.
6. VALVE VAULT BARREL SECTIONS SHALL CONFORM TO A.S.T.M. 478 AS DESCRIBED IN THE STANDARD SPECIFICATIONS FOR SEWER AND WATER MAIN CONSTRUCTION IN ILLINOIS, 5TH EDITION MAY 1996.

VALVE VAULT

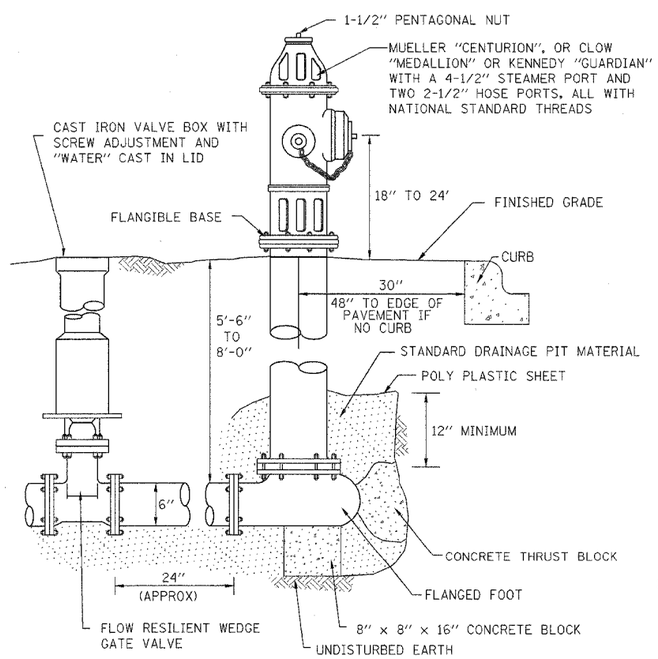

FIRE HYDRANT

NOTES:

1. STEAMER PORT TO FACE PAVEMENT
2. PROVIDE 2 FOOT DIAMETER BY 2 FEET DEEP DRAINAGE PIT FILLED WITH 1 INCH WASHED STONE BELOW AND ADJACENT TO HYDRANT
3. HYDRANT TO BE PAINTED ALKYD ENAMEL SAFETY RED

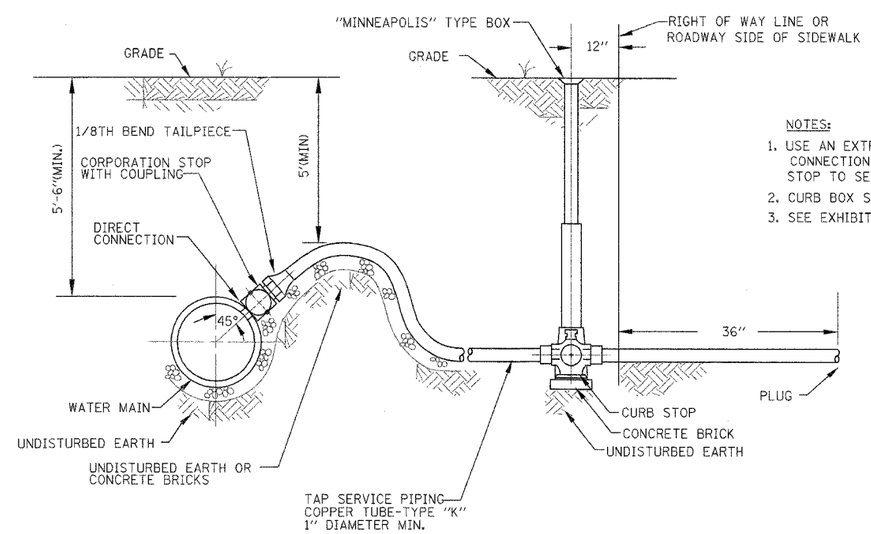

NOTES:

1. USE AN EXTRA TWO FEET OF COPPER WATER SERVICE CONNECTION BETWEEN THE CORPORATION STOP AND THE CURB STOP TO SERVE AS STRAIN RELIEF.
2. CURB BOX SHALL HAVE A PLUG TYPE LID.
3. SEE EXHIBIT NO. 13 FOR APPROVED FITTING DESCRIPTIONS.

WATER SERVICE CONNECTION

1" = 25mm, 1 Foot = 300mm

REVISIONS	
NAME	DATE

GRAEF, ANHALT, SCHLOEMER & ASSOCIATES, INC.
ENGINEERS & SCIENTISTS
8501 W. Higgins Road; Suite 280
Chicago, Illinois 60631
(773) 399-0112

ILLINOIS DEPARTMENT OF TRANSPORTATION
ILLINOIS ROUTE 22
E. OF BUESCHING RD TO QUENTIN RD
DETAILS

SANITARY SEWER AND WATER MAIN RELOCATION

DRAWN BY: JJH
DATE: 03-11-05
CHECKED BY: WS

FINAL SURVEY	BY	DATE
SURVEYED		
PLOTTED		
TEMPLATE		
AREAS		
AREAS CHECKED		
NOTE BOOK		
NO.		

ORIGINAL SURVEY	BY	DATE
SURVEYED		
PLOTTED		
TEMPLATE		
AREAS		
AREAS CHECKED		
NOTE BOOK		
NO.		