F.A.I. RTE.	SECTION	COUNTY	TOTAL SHEETS	SHEET NO.
94	•	COOK	860	404
STA. 2200+00.00		TO STA. 2362+00.00		
FED. ROAD DIST. NO.	ILLINOIS	FED. AID PROJECT		

• (1516.1, 1717 & 1818) R-8

62694

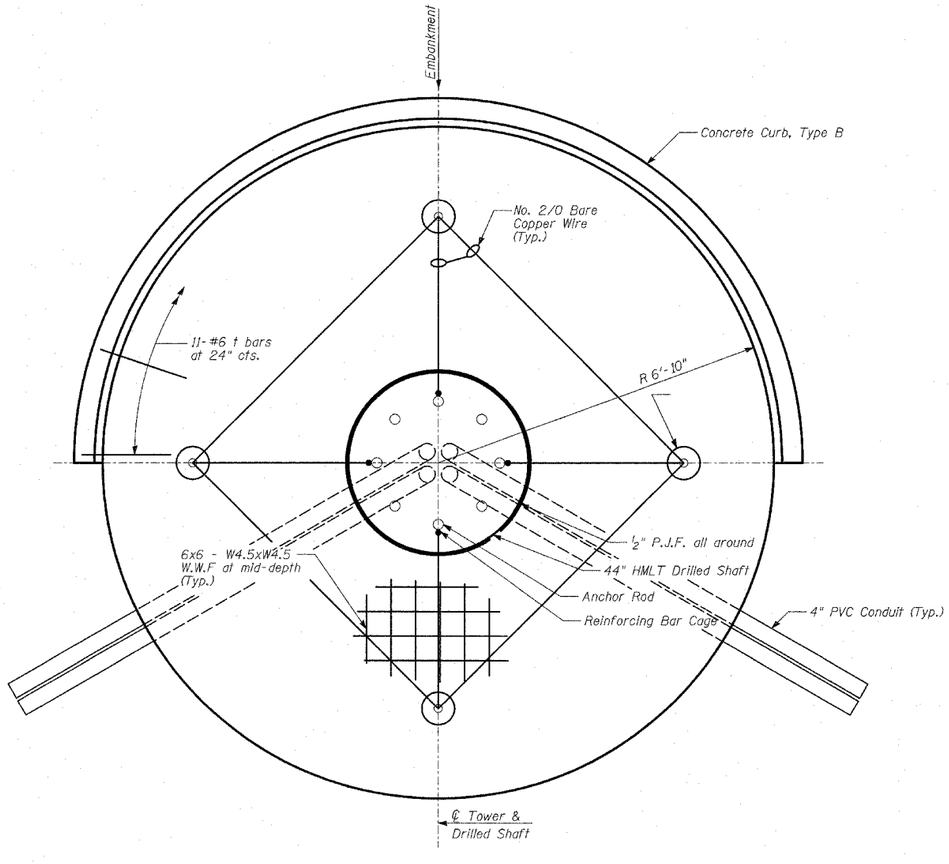

PLAN VIEW

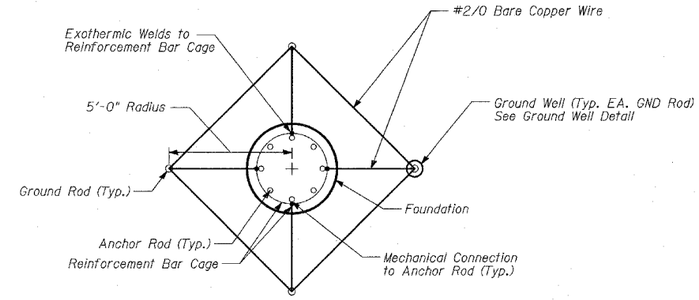

GROUND ROD DETAIL

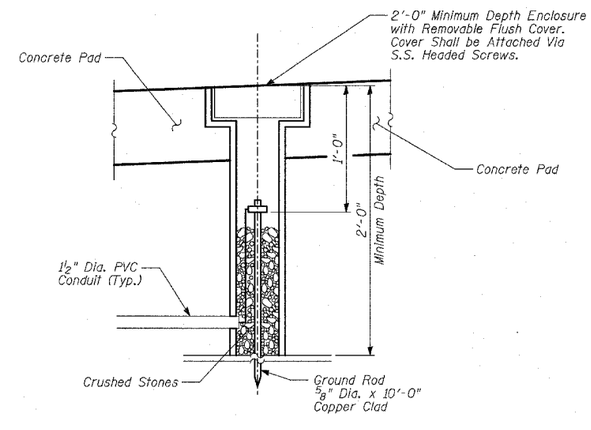

GROUND WELL DETAIL

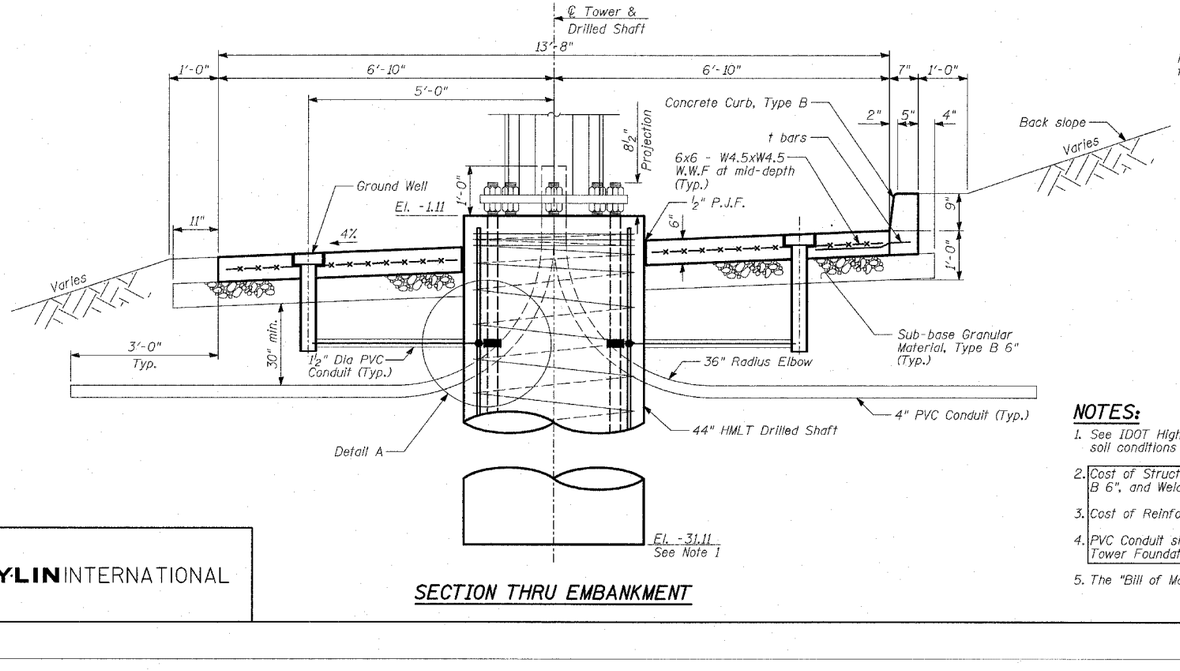

SECTION THRU EMBANKMENT

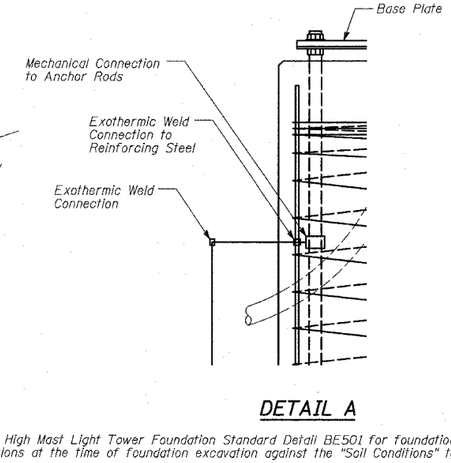

DETAIL A

BILL OF MATERIAL*

(Per HMLT Foundation)

Bar	No.	Size	Length	Shape
t	11	#6	2'-0"	
Reinforcement Bars			POUND	40
Sub-Base Granular Material, Type B 6"			SQ YD	20
Structure Excavation			CU YD	12
Concrete Structures			CU YD	3
Protective Coat			SQ YD	20
Welded Wire Fabric, 6x6			SQ YD	16
Concrete Curb, Type B			FOOT	22
Light Tower Foundation, 44" Diameter			FOOT	30

* See Note 5.

TOTAL BILL OF MATERIAL

ITEM	UNIT	TOTAL
Concrete Curb, Type B	FOOT	22
Light Tower Foundation, 44" Diameter	FOOT	30
Light Tower Service Pad, 6"	SQ FT	137

NOTES:

1. See IDOT High Mast Light Tower Foundation Standard Detail BE501 for foundation details. Contractor to verify soil conditions at the time of foundation excavation against the "Soil Conditions" table on STD. Detail BE501.
2. Cost of Structure Excavation, Backfilling, Concrete Structures, Protective Coat, Sub-base Granular Material type B 6", and Welded Wire Fabric, 6x6 is included in Light Tower Service Pad, 6" and will not be paid for separately.
3. Cost of Reinforcement Bars is included in Concrete Curb, Type B and will not be paid for separately.
4. PVC Conduit shall extend 3 feet beyond the edge of the concrete pad. Cost of PVC Conduits is included in Light Tower Foundation, 44" Diameter and will not be paid for separately.
5. The "Bill of Material" is shown for constructability whereas the "Total Bill of Material" shows what is being paid for.

SHEET 1 OF 1

REVISIONS	
NAME	DATE
REVISED	04/15/05

ILLINOIS DEPARTMENT OF TRANSPORTATION

F.A.I. 94 (DAN RYAN EXPRESSWAY)

HMLT RMN4 SERVICE PAD

S.N.
SCALE: N.T.S.
DATE: MARCH 18, 2005

DESIGNED BY: MI, DJR
DRAWN BY: DJR
CHECKED BY: TD

TY·LIN INTERNATIONAL

04/13/2006 2:06:03 PM