F.A.I. RTE.	SECTION	COUNTY	TOTAL SHEETS	SHEET NO.
94	*	COOK	860	405
STA. 2200+00.00		TO STA. 2362+00.00		
FED. ROAD DIST. NO.	ILLINOIS	FED. AID PROJECT		

* (1516.1, 1717 & 1818) R-8

62694

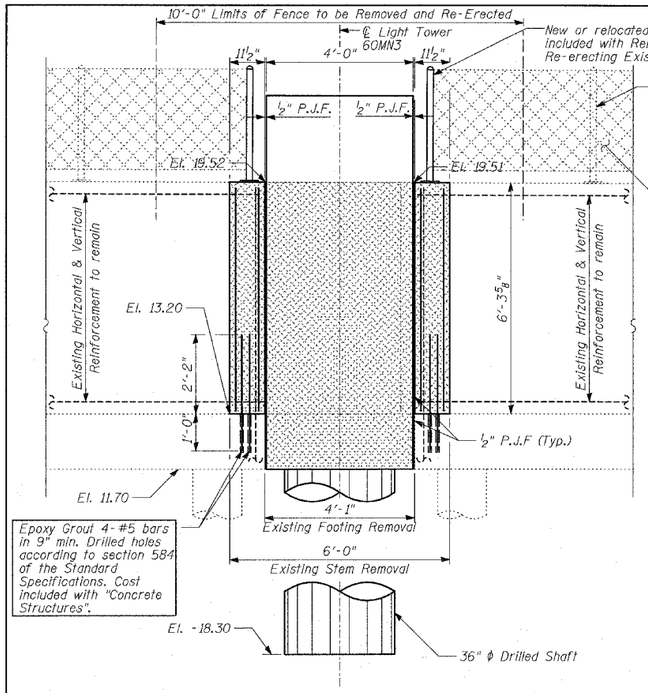

ELEVATION

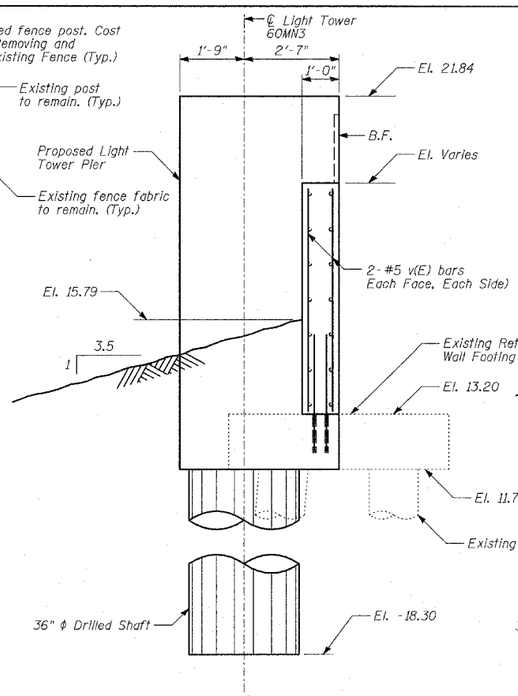

SECTION A-A

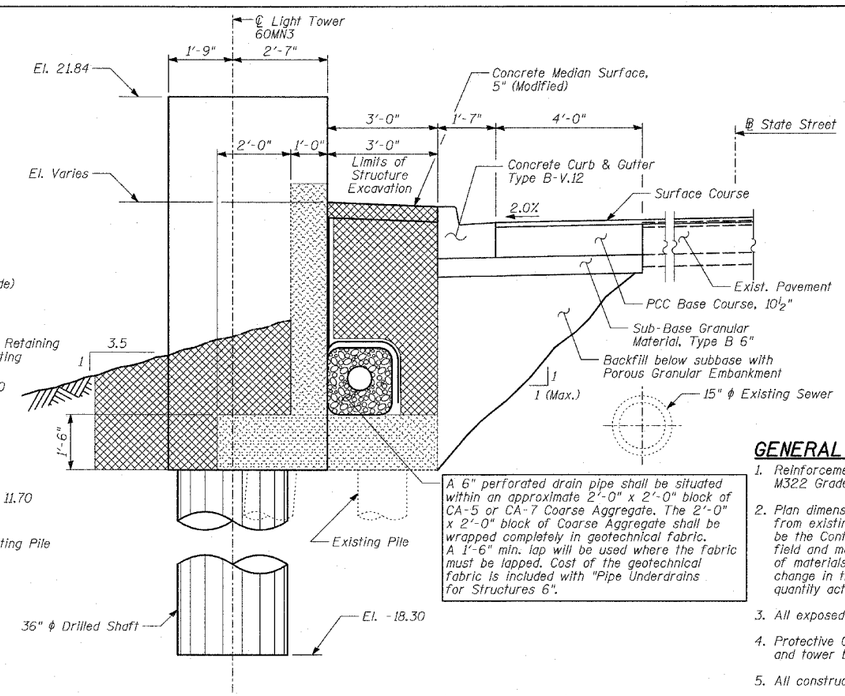

SECTION B-B

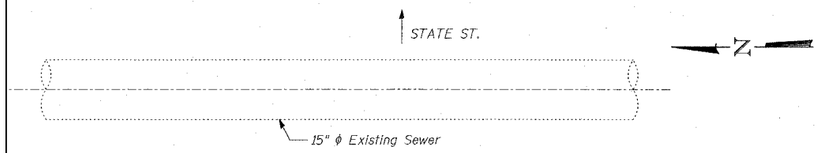

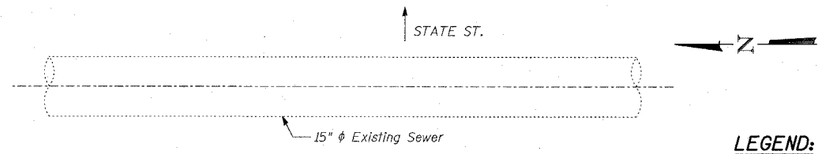

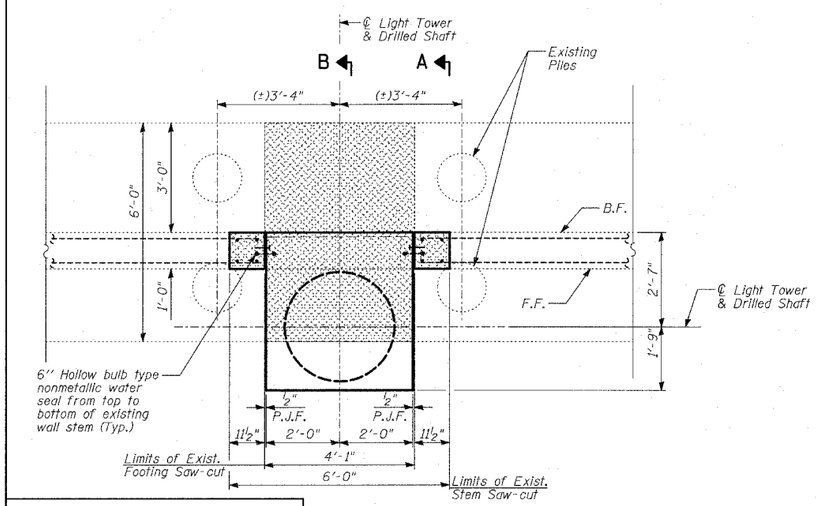

PLAN
(Removal Limits)

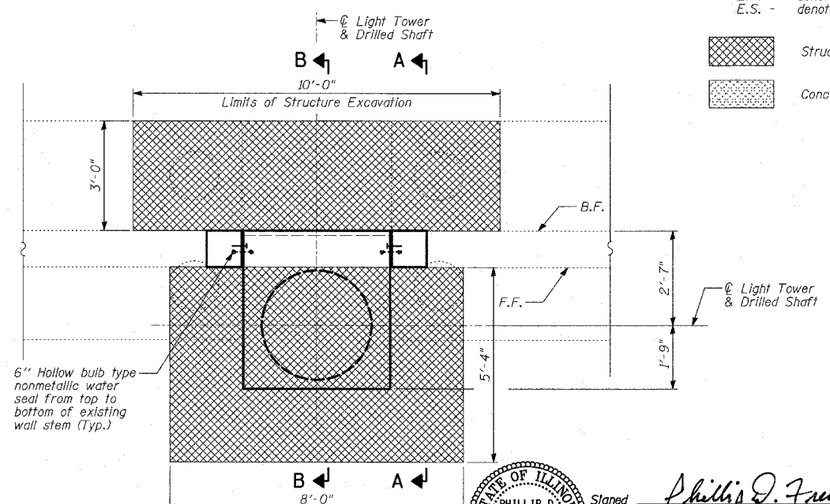

PLAN
(Excavation Limits)

LEGEND:

F.F. - denotes Front Face.
B.F. - denotes Back Face.
E.F. - denotes Each Face.
E.S. - denotes Each Side.

Structure Excavation

Concrete Removal

TOTAL BILL OF MATERIAL

ITEM	UNIT	TOTAL
Porous Granular Embankment	CU YD	13
Concrete Removal	CU YD	3
Structure Excavation	CU YD	13
Concrete Structures	CU YD	7
Protective Coat	SQ YD	15
Rustication Finish	SQ FT	6
Reinforcement Bars, Epoxy Coated	POUND	3,970
Pipe Underdrains for Structures 6"	FOOT	8
Drilled Shaft in Soil 36"	FOOT	30
Chain Link Fence to be Removed and Re-Erected	FOOT	10

GENERAL NOTES:

1. Reinforcement bars shall conform to the requirements of AASHTO M31 or M322 Grade 60.
2. Plan dimensions and details relative to existing structure have been taken from existing plans and are subject to nominal construction variations. It shall be the Contractor's responsibility to verify such dimensions and details in the field and make necessary approved adjustments prior to construction or ordering of materials. Such variations shall not be cause for additonal compensation for a change in the scope of the work; however, the Contractor will be paid for the quantity actually finished at the unit price bid for the work.
3. All exposed concrete edges shall be chamfered ¾" except as noted.
4. Protective Coat shall be applied to exposed surfaces of the new concrete wall and tower base.
5. All construction joints shall be bonded.
6. All elevations shown are based on the Chicago City Datum of 0.00, which is 579.19 feet above mean tide New York. (NAVD 88)
7. Connect the Pipe Underdrains for Structures, 6" to the existing drainage system. Cost included with "Pipe Underdrain for Structures, 6"".
8. Any reinforcement bars that are damaged during concrete removal operations at the removal and replaced portions of wall stem shall be repaired or replaced using approved bar splicer or anchorage system. Cost included with "Concrete Removal".
9. Sand blast clean existing reinforcing bars to be incorporated into new construction. After cleaning, bars shall be evaluated to determine if additional reinforcing bars are required. Damaged or cut bars, or bars that have lost 25% or more of their original cross sectional area shall be supplemented by new in-kind reinforcement bars, to the approval of the engineer. Cost included with "Concrete Removal".
10. It is the Contractor's responsibility to locate existing utilities, especially the existing sewer. Any repairs due to damage of the sewer shall be the Contractor's responsibility.
11. The design loads are based on AASHTO Standard Specifications for Structural Supports for Highway Signs, Luminaires and Traffic Signals-2001.
12. Drilled shafts shall be installed according to IDOT special provisions for "Drilled Shafts".
13. At all locations where reinforcement bar laps are not in direct contact, the Contractor shall provide sufficient spacing between the vertical bars, equal to the size of the largest concrete aggregate plus ½ inch.
14. Cost of anchor rod assembly, conduit and wires for grounding are included with "Concrete Structures".

DESIGN SPECIFICATION

AASHTO 2002 Standard Specifications for Highway Bridges

DESIGN STRESSES

FIELD UNITS

f'c = 3,500 psi
fy = 60,000 psi (Reinforcement)

INDEX OF SHEETS:

1. EXISTING WALL REMOVAL AND RECONSTRUCTION FOR LIGHT TOWER 60MN3.
2. LIGHT TOWER 60MN3 FOUNDATION DETAILS.
3. LIGHT TOWER 60MN3 CONDUIT DETAILS.

SHEET 1 OF 3

STATE OF ILLINOIS PHILLIP D. FREY 081-004826 CHICAGO, ILLINOIS LICENSED STRUCTURAL ENGINEER

Signed Phillip D. Frey
Phillip D. Frey, S.E. Il. Lic. No. 081-004826 Expires 11-30-2006.
For drawings 1 thru 3 of 3
Date 3/18/05

TY·LIN INTERNATIONAL

REVISIONS	
NAME	DATE
REVISED	04/15/05

ILLINOIS DEPARTMENT OF TRANSPORTATION

F.A.I. 94 (DAN RYAN EXPRESSWAY)

EXISTING WALL REMOVAL AND RECONSTRUCTION FOR LIGHT TOWER 60MN3

SCALE:
DATE: MARCH 18, 2005
DESIGNED BY: TD, MAF
DRAWN BY: DJR, MAF
CHECKED BY: MI, TD

p:\02373\Structur\Cir\dvl\LT Vns\Tab\sht03-05a_mnl.dgn 04/18/2006 11:46:13 AM