F.A.I. RTE.	SECTION	COUNTY	TOTAL SHEETS	SHEET NO.
94	•	COOK	860	472
STA. 2200+00.00	TO STA. 2362+00.00			
FED. ROAD DIST. NO.	ILLINOIS	FED. AID PROJECT		

• (1516.1, 1717 & 1818) R-8

62694

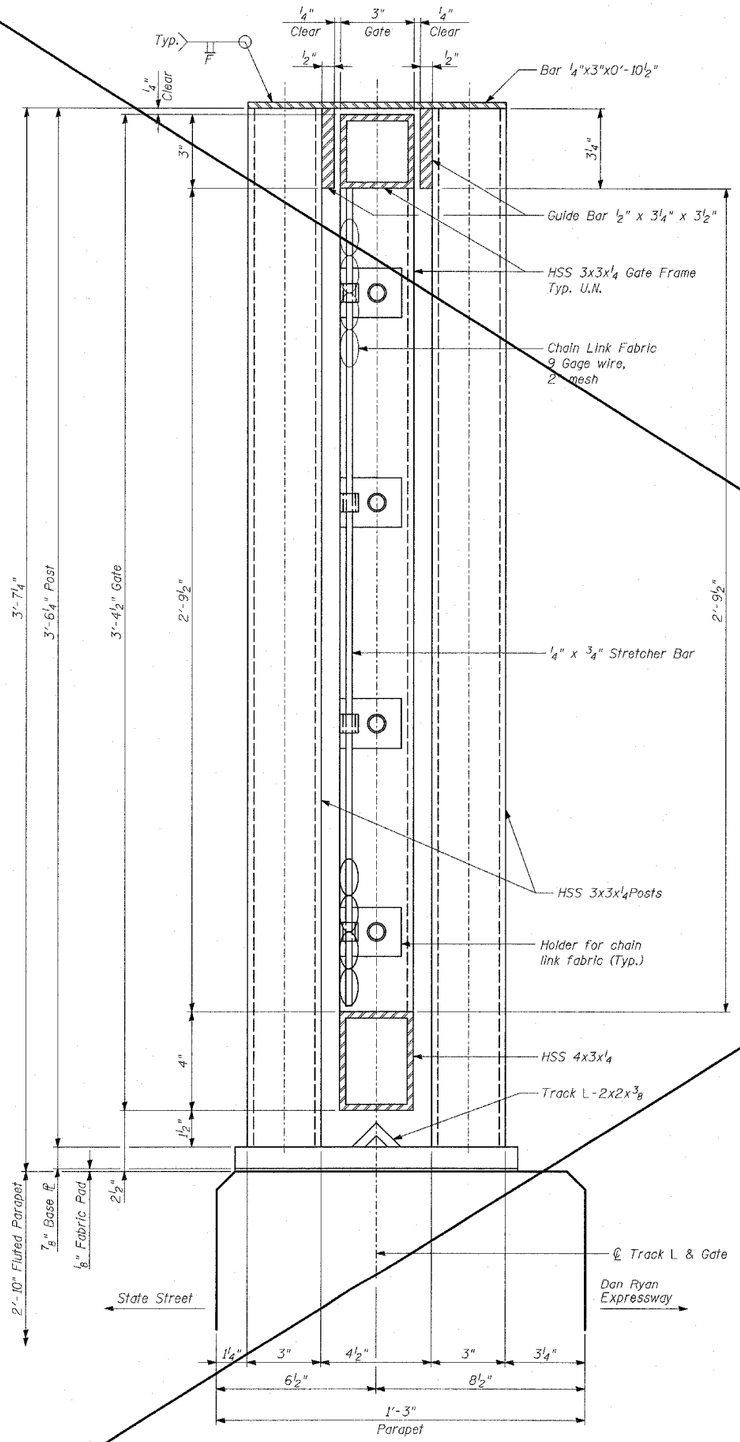

SECTION A-A

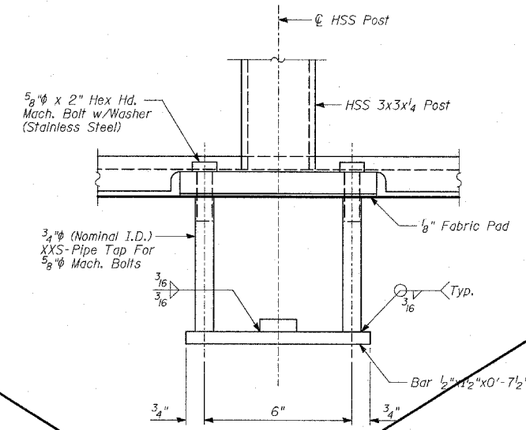

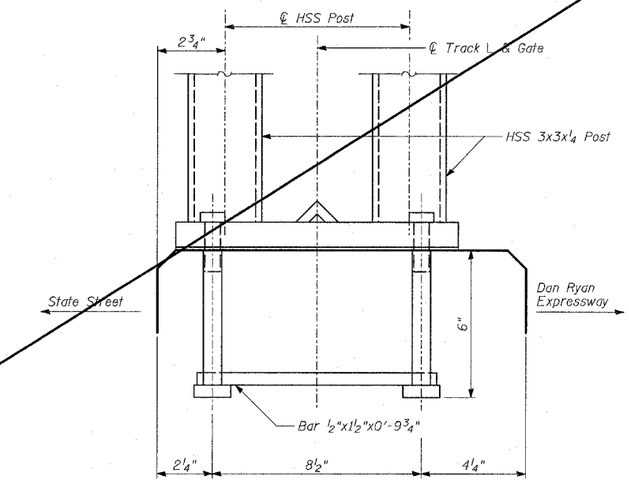

ANCHOR BOLT DETAILS

In lieu of the cast-in-place anchor bolt assembly shown, the Contractor has the option of drilling and epoxy grouting 5/8" diameter anchor rods with 1 1/4" diameter washers. The Contractor shall use the capsule or the adhesive cartridge type anchor rods that have been previously tested and given prior approval by the Department. The Contractor shall install these anchor rods in pre-drilled holes according to the manufacturer's recommendations and procedures. The capsule or adhesive cartridge shall be sealed with pre-measured amounts of adhesive chemical. Anchor rod threading to be peened after nuts are installed.

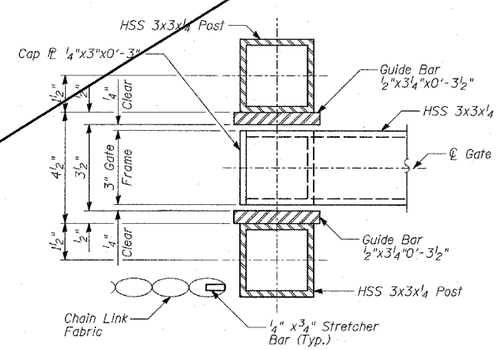

SECTION B-B

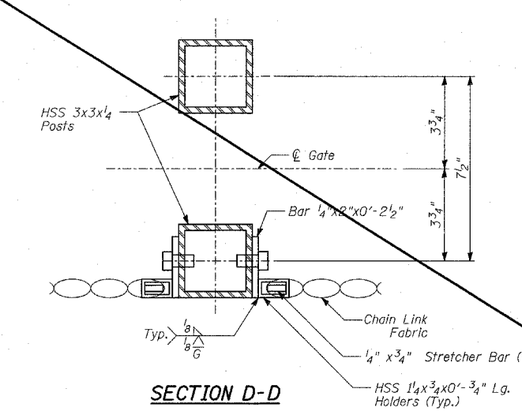

SECTION D-D

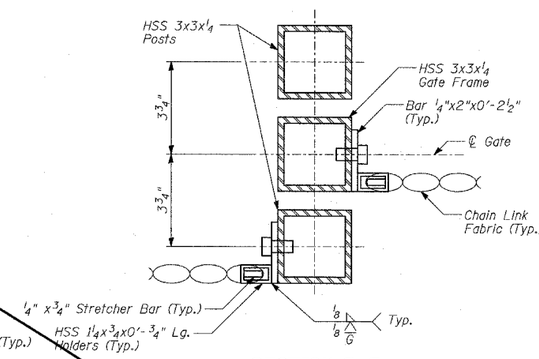

SECTION E-E

NOTES:

1. For Notes See Sheet 21 of 33.
2. For Anchor Bolt locations, see Details 1, 2 & 3 on Sheet 21 of 33.

SHEET 23 OF 33

REVISIONS	
NAME	DATE
REVISED	04/15/05

ILLINOIS DEPARTMENT OF TRANSPORTATION

F.A.I. 94 (DAN RYAN EXPRESSWAY)
RETAINING WALL ALONG STATE ST.
93RD ST. TO 91ST ST.
WALL 2B
GATE SECTIONS

S.N. 016-W961 — DESIGNED BY: MI, DJR
SCALE: N.T.S. — DRAWN BY: DJR, MAF
DATE: MARCH 18, 2005 — CHECKED BY: TD, MI

TY·LIN INTERNATIONAL