F.A.I. RTE.	SECTION	COUNTY	TOTAL SHEETS	SHEET NO.
94	•	COOK	860	527
STA. 2200+00.00		TO STA. 2362+00.00		
FED. ROAD DIST. NO.	ILLINOIS	FED. AID PROJECT		

• (1516.1, 1717 & 1818) R-8

62694

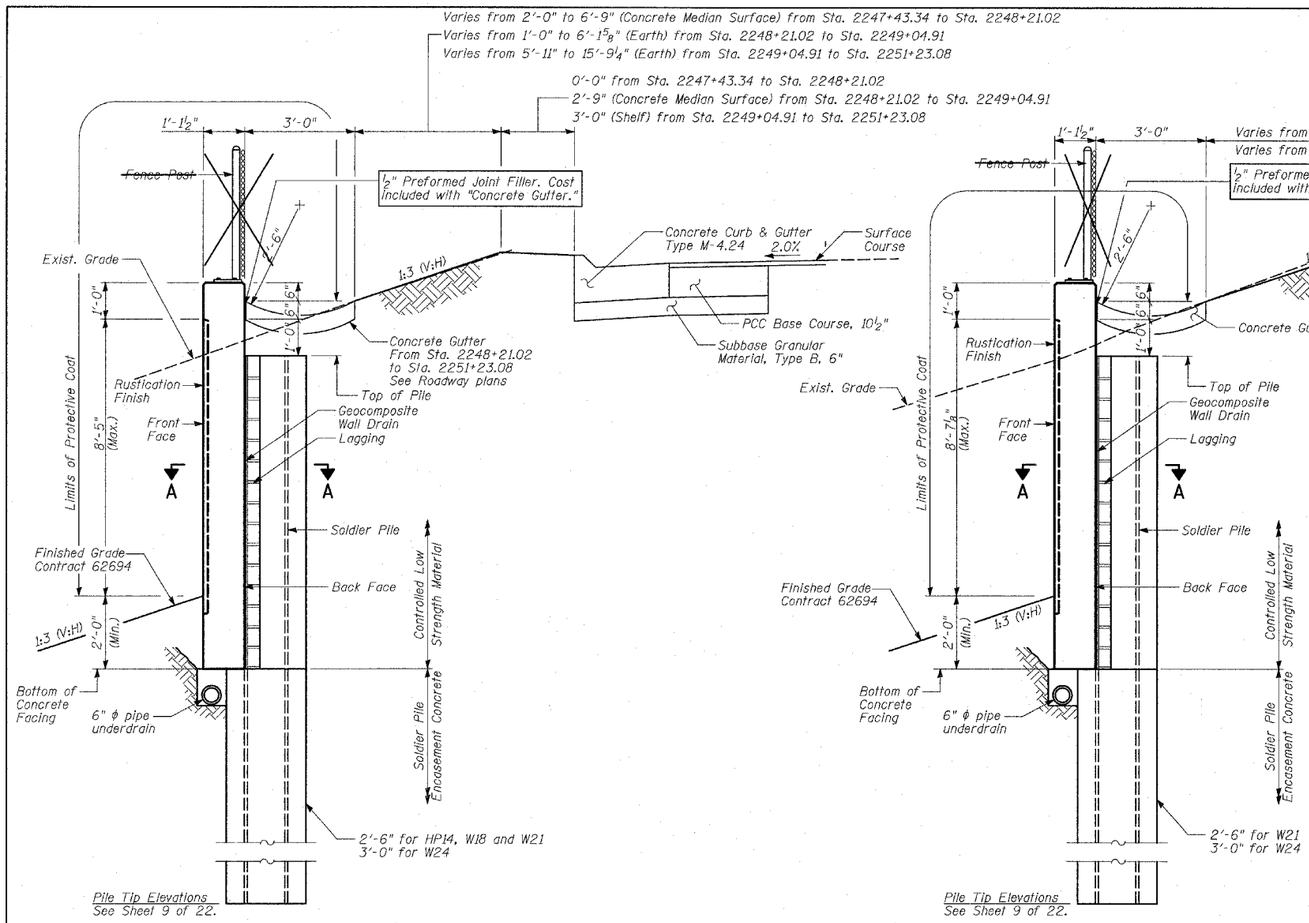

TYPICAL CROSS-SECTION

(Sta. 2247+43.34 to Sta. 2251+23.08)

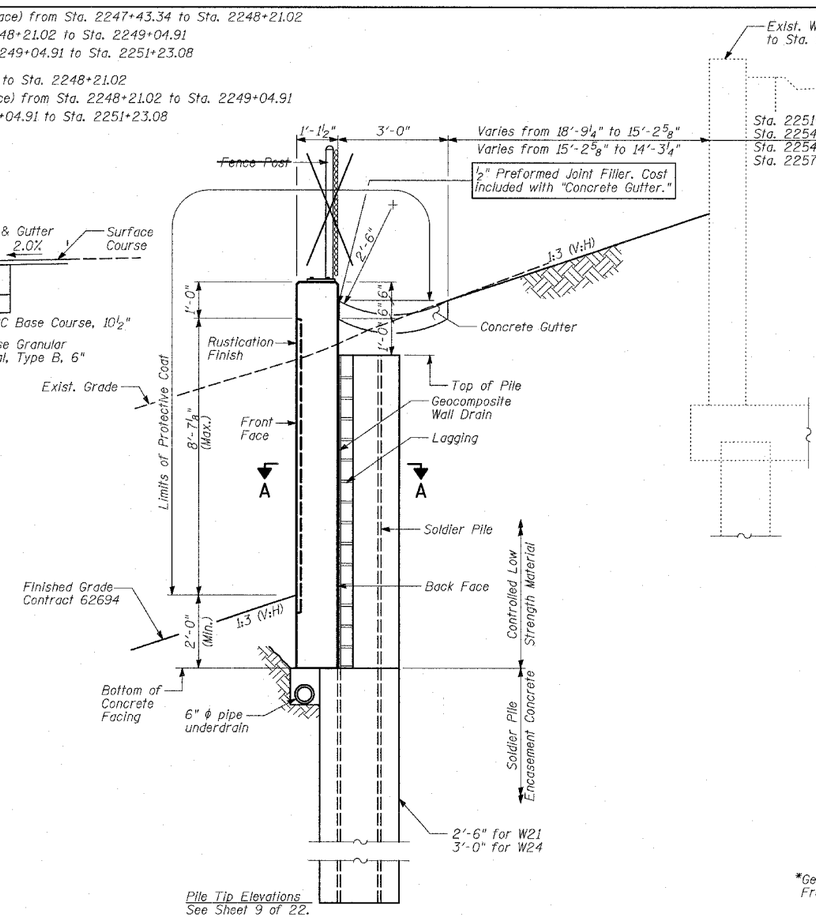

TYPICAL CROSS-SECTION

(Sta. 2251+23.08 to Sta. 2257+63.34)

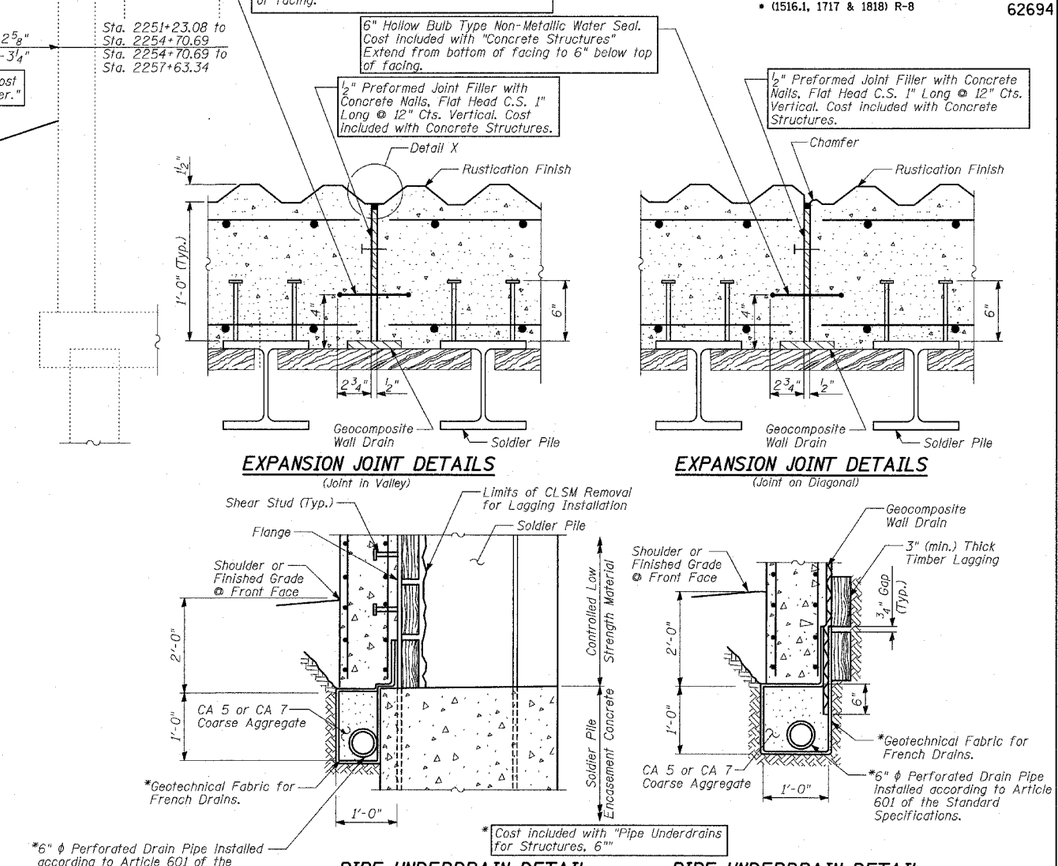

EXPANSION JOINT DETAILS

(Joint in Valley)

EXPANSION JOINT DETAILS

(Joint on Diagonal)

PIPE UNDERDRAIN DETAIL AT SOLDIER PILE

PIPE UNDERDRAIN DETAIL BETWEEN SOLDIER PILES

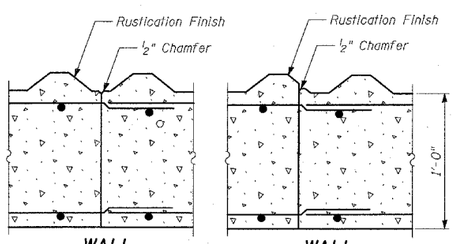

WALL

(Joint in Valley)

WALL

(Joint on Diagonal)

CONSTRUCTION JOINT DETAILS

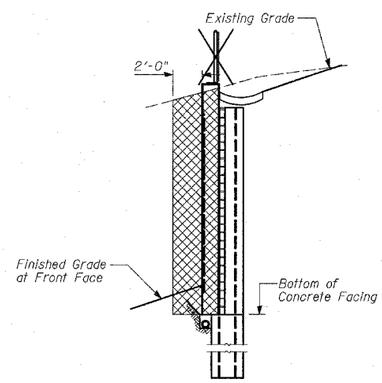

STRUCTURE EXCAVATION

(For Proposed Wall)

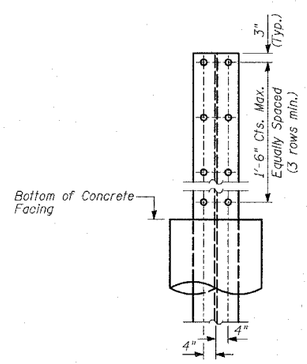

SHEAR STUD CONNECTOR DETAIL

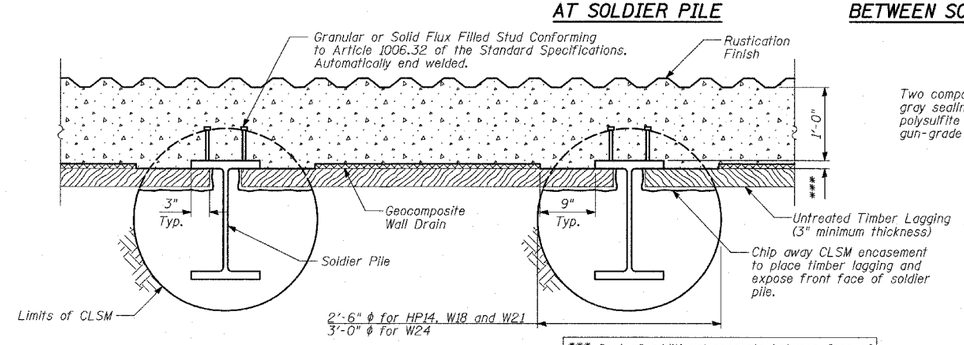

SECTION A-A

*** Cost of additional concrete between face of untreated timber lagging and face of pile included with "Concrete Structures".

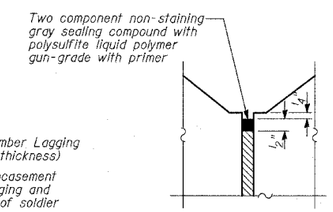

DETAIL X

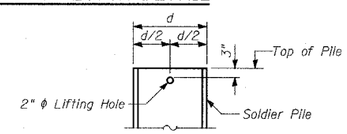

LIFTING HOLE DETAIL

BILL OF MATERIAL

ITEM	UNIT	TOTAL
Structure Excavation	CU YD	966
Stud Shear Connectors	EACH	1,738
Untreated Timber Lagging	SQ FT	8,253
Geocomposite Wall Drain	SQ YD	974
Pipe Underdrains for Structures, 6"	FOOT	1,020

NOTES:

1. The geocomposite wall drain shall be constructed according to Section 591 of the Standard Specifications.
2. The Contractor is responsible for the design and performance of the lagging using no less than 3" nominal rough-sawn thickness and the minimum tabulated unit stress in bending (F_b), used in the design of timber lagging shall be 1000 psi.
3. Stud shear connectors shall be 3/4" ϕ x 6" granular or solid flux filled headed studs, automatically end welded to the front flange of the soldier piles.

TY·LIN INTERNATIONAL

REVISIONS NAME	DATE
REVISED	05/06/05
REVISED	04/15/05

ILLINOIS DEPARTMENT OF TRANSPORTATION

F.A.I. 94 (DAN RYAN EXPRESSWAY)
RETAINING WALL ALONG STATE ST.
EXIT RAMP TO 87TH ST.
WALL 5
WALL CROSS SECTIONS & DETAILS

S.N. 016-W955 | DESIGNED BY: MI, TB
SCALE: N.T.S. | DRAWN BY: TB, DJR
DATE: MARCH 18, 2005 | CHECKED BY: TD, MI

SHEET 10 OF 22