F.A.I. RTE.	SECTION	COUNTY	TOTAL SHEETS	SHEET NO.
94	*	COOK	860	529
STA. 2200+00.00		TO STA. 2362+00.00		
FED. ROAD DIST. NO.	ILLINOIS	FED. AID PROJECT		

* (1516.1, 1717 & 1818) R-8

62694

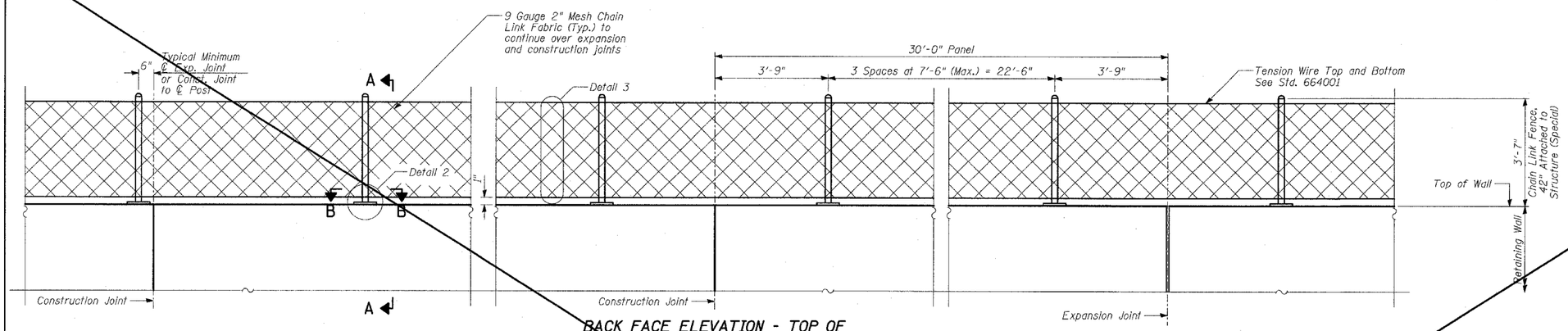

BACK FACE ELEVATION - TOP OF RETAINING WALL CHAIN LINK FENCE

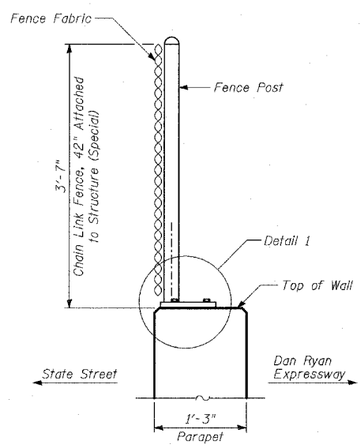

SECTION A-A

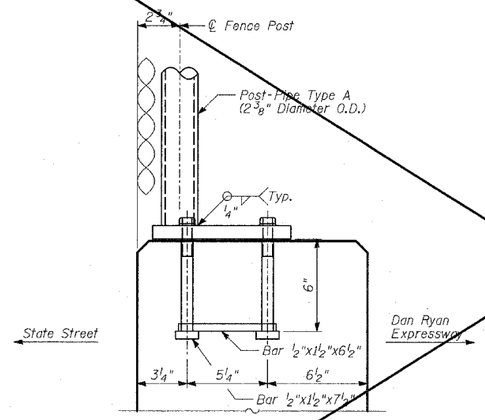

DETAIL 1

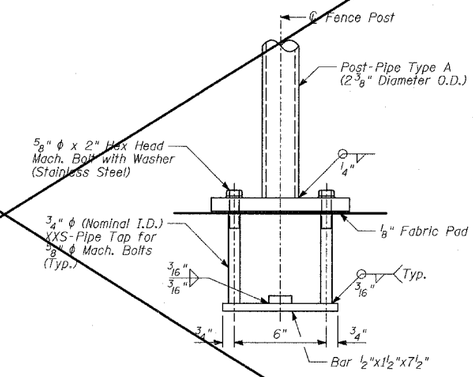

DETAIL 2

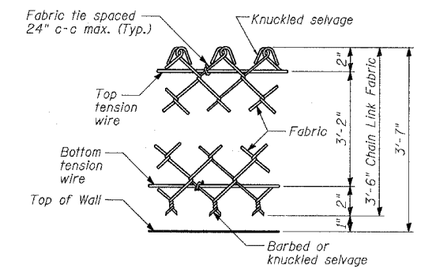

DETAIL 3

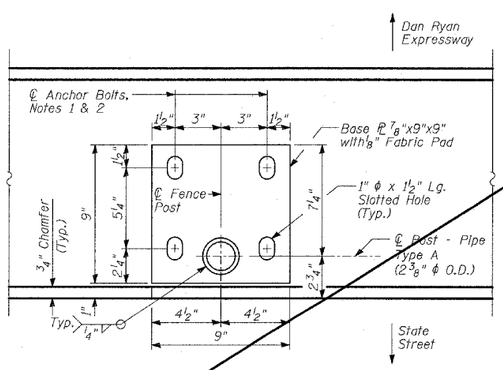

SECTION B-B
BASE PLATE PLAN

BILL OF MATERIAL

ITEM	UNIT	TOTAL
Chain Link Fence, 42" Attached to Structure (Special)	FOOT	1,020

NOTES:

1. In lieu of the castinplace anchor bolt assembly shown, the Contractor has the option of drilling and epoxy grouting 5/8" diameter anchor rods with 1 1/4" diameter washers. The Contractor shall use the capsule or the adhesive cartridge type anchor rods that have been previously tested and given prior approval by the Department. The Contractor shall install these anchor rods in pre-drilled holes according to the manufacturer's recommendations and procedures. The capsule or adhesive cartridge shall be sealed with pre-measured amounts of adhesive chemical. Anchor rod threading to be peened after nuts are installed.

2. For additional chain link details, see Standard 664001.

SHEET 12 OF 22

REVISIONS	
NAME	DATE
REVISED	04/15/05

ILLINOIS DEPARTMENT OF TRANSPORTATION

F.A.I. 94 (DAN RYAN EXPRESSWAY)
RETAINING WALL ALONG STATE ST.
EXIT RAMP TO 87TH ST.
WALL 5 - CHAIN LINK FENCE, 42" ATTACHED TO STRUCTURE (SPECIAL)

S.N. 016-W955 — DESIGNED BY: MI, MAF
SCALE: N.T.S. — DRAWN BY: MAF, BJR
DATE: MARCH 18, 2005 — CHECKED BY: TD, MI

TYLIN INTERNATIONAL

© COPYRIGHT