F.A.I. RTE.	SECTION	COUNTY	TOTAL SHEETS	SHEET NO.
94	•	COOK	860	554
STA. 2200+00.00		TO STA. 2362+00.00		
FED. ROAD DIST. NO.	ILLINOIS	FED. AID PROJECT		

• (1516.1, 1717 & 1818) R-8

62694

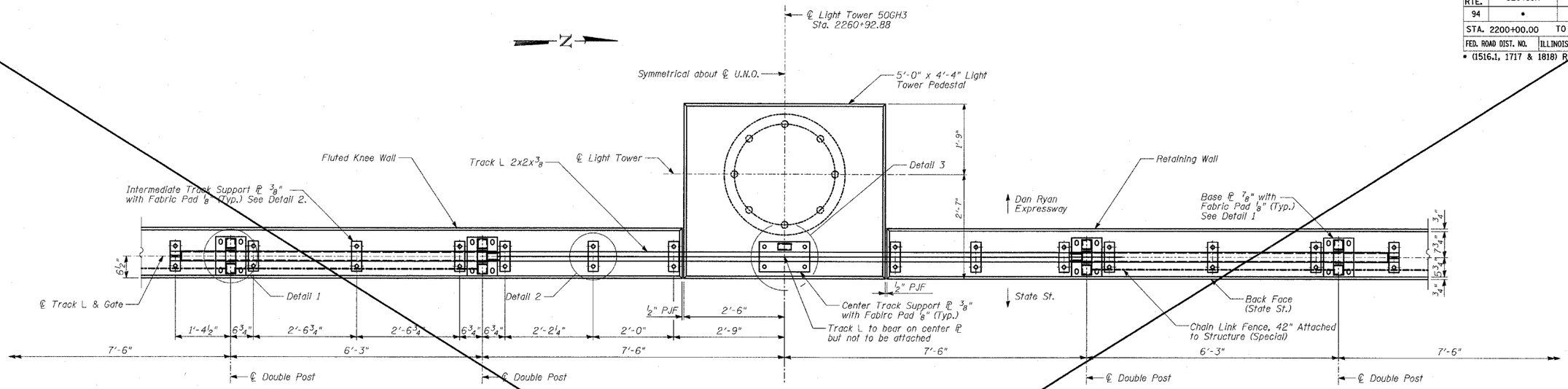

PLAN - GATE IN OPEN POSITION

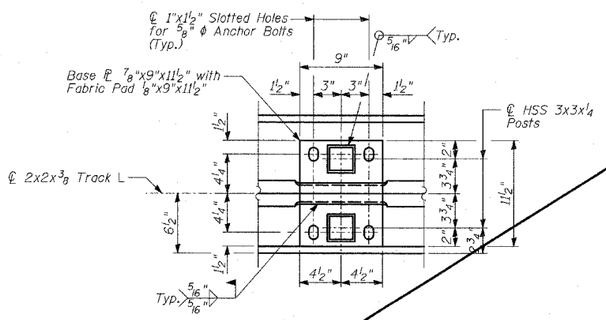

DETAIL 1 - BASE ℙ PLAN

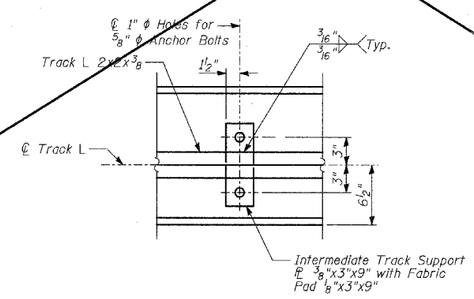

DETAIL 2

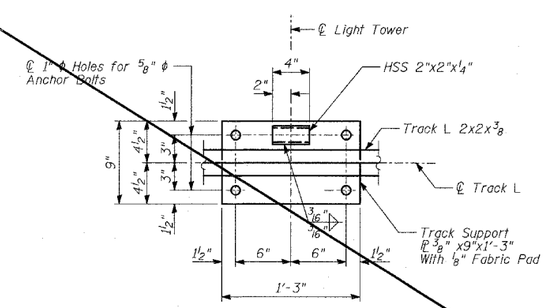

DETAIL 3

BILL OF MATERIAL

ITEM	UNIT	TOTAL
Chain Link Gate Assembly (Special)	EACH	1

NOTES:

1. All bolts shall be stainless steel conforming to ASTM F593-98 and F594-98.
2. All pipes and bars shall be hot dipped galvanized after fabrication.
3. For Back Face Elevations, see Sheet 16 of 23.
4. For Anchor Bolt Details, see Sheet 17 of 23.

SHEET 15 OF 23

REVISIONS	
NAME	DATE
REVISED	04/15/05

ILLINOIS DEPARTMENT OF TRANSPORTATION

F.A.I. 94 (DAN RYAN EXPRESSWAY)
RETAINING WALL ALONG STATE ST.
ENTRANCE RAMP FROM 87TH ST.
WALL 6
GATE PLAN AND NOTES

S.N. 016-W956 — DESIGNED BY: MI, MAF
SCALE: N.T.S. — DRAWN BY: MAF, DJR
DATE: MARCH 18, 2005 — CHECKED BY: TD, MI

TYLIN INTERNATIONAL