F.A.I. RTE.	SECTION	COUNTY	TOTAL SHEETS	SHEET NO.
94	*	COOK	860	589
STA. 2200+00.00 TO STA. 2362+00.00				
FED. ROAD DIST. NO.	ILLINOIS	FED. AID PROJECT		

* (1516.1, 1717 & 1818) R-8

62694

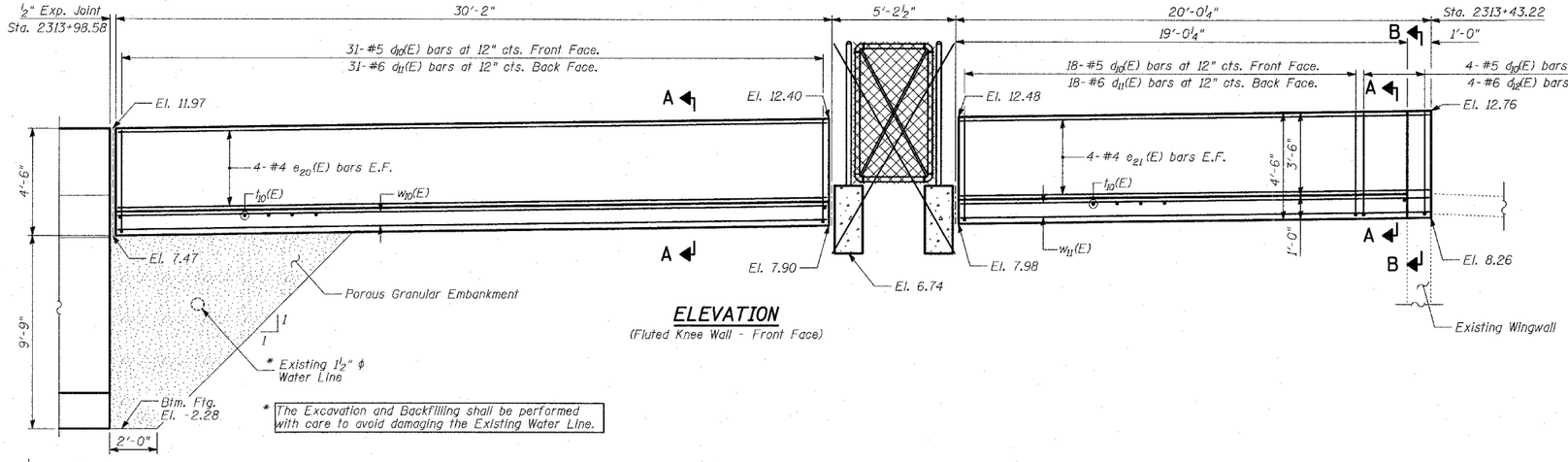

* The Excavation and Backfilling shall be performed with care to avoid damaging the Existing Water Line.

ELEVATION

(Fluted Knee Wall - Front Face)

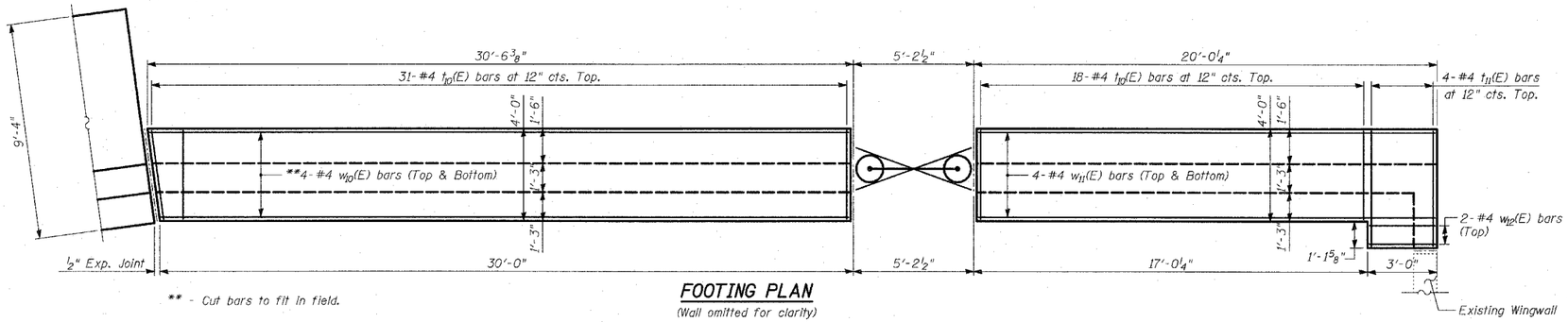

** - Cut bars to fit in field.

FOOTING PLAN

(Wall omitted for clarity)

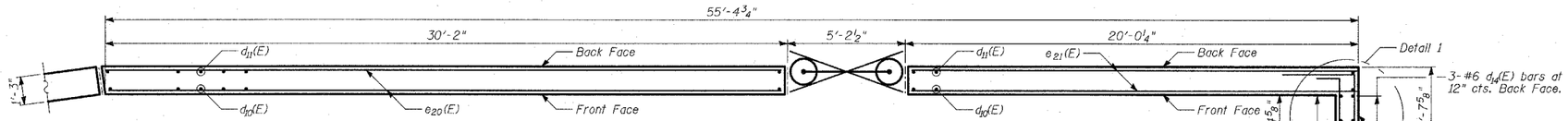

WALL PLAN

(Footing omitted for clarity)

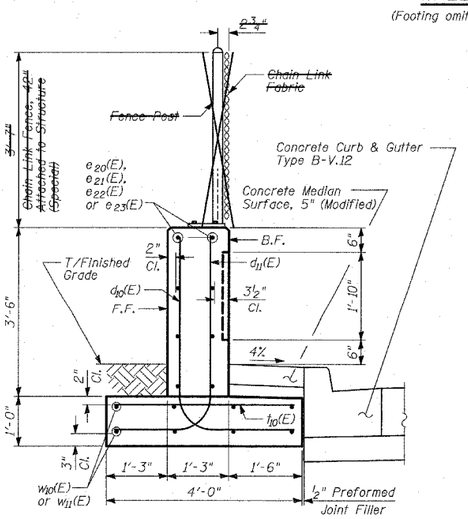

SECTION A-A

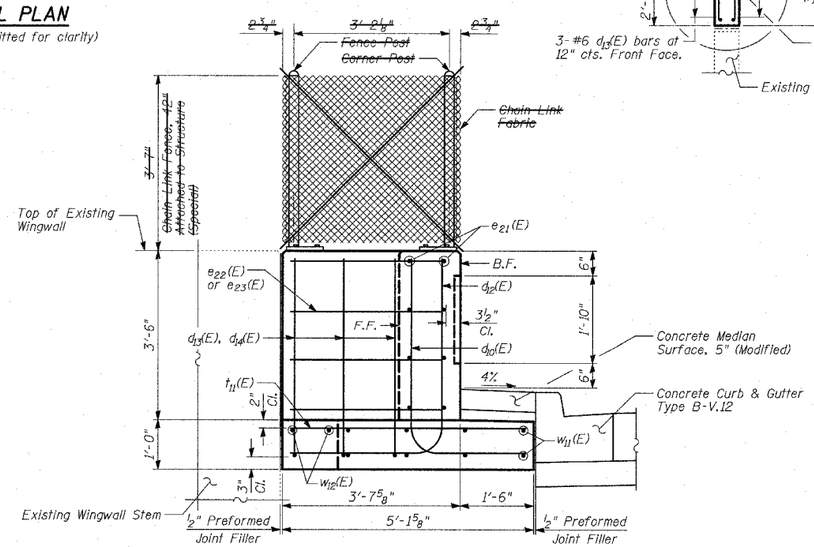

SECTION B-B

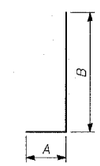

MARK TABLE

Bar	A	B
d_{10}(E)	2'-5"	4'-1"
d_{11}(E)	2'-1"	4'-1"
d_{12}(E)	3'-2"	4'-1"
d_{13}(E)	1'-11"	4'-1"
d_{14}(E)	2'-7"	4'-1"
e_{22}(E)	3'-4"	3'-4"
e_{23}(E)	10"	3'-4"

BARS d_{10}(E), d_{11}(E), d_{12}(E) d_{13}(E), d_{14}(E), e_{22}(E) & e_{23}(E)

BILL OF MATERIAL

Bar	No.	Size	Length	Shape
d_{10}(E)	53	#5	6'-6"	
d_{11}(E)	49	#6	6'-2"	
d_{12}(E)	4	#6	7'-3"	
d_{13}(E)	3	#5	6'-0"	
d_{14}(E)	3	#6	6'-8"	
e_{20}(E)	8	#4	28'-10"	
e_{21}(E)	8	#4	19'-8"	
e_{22}(E)	4	#5	6'-8"	
e_{23}(E)	4	#5	4'-2"	
t_{10}(E)	49	#4	3'-8"	
t_{11}(E)	4	#4	4'-10"	
w_{10}(E)	8	#4	30'-2"	
w_{11}(E)	8	#4	19'-8"	
w_{12}(E)	2	#4	2'-8"	
Reinforcement Bars, Epoxy Coated			POUND	1,620
Porous Granular Embankment			SQ YD	21
Structure Excavation			CU YD	28
Concrete Structures			CU YD	18
Protective Coat			SQ YD	42
Rustication Finish			SQ FT	107

Reinforcement bars designated (E) shall be epoxy coated.

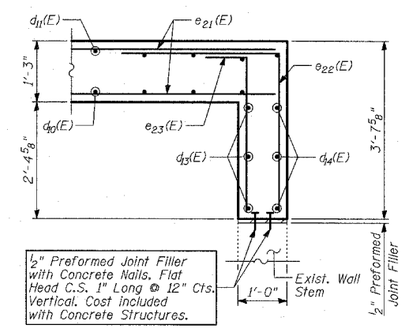

DETAIL 1

NOTES:

1. Work this sheet with Sheet 17 of 31.
2. For Lap Splices, See Sheet 13 of 31.

REVISIONS	
NAME	DATE
REVISED	04/15/05

ILLINOIS DEPARTMENT OF TRANSPORTATION

F.A.I. 94 (DAN RYAN EXPRESSWAY)
RETAINING WALL ALONG STATE ST.
ENTRANCE RAMP AT 79TH ST.
WALL 69 - PLAN AND ELEVATION-
FLUTED KNEE WALL

S.N. 016-W975 | DESIGNED BY: MI, MAF
SCALE: N.T.S. | DRAWN BY: MAF
DATE: MARCH 18, 2005 | CHECKED BY: TD, MI

TYLIN INTERNATIONAL

C:\0235\structure\17\Wall 69\F17aDB5b53a w975.dgn 04/13/2005 7:14