F.A.I. RTE.	SECTION	COUNTY	TOTAL SHEETS	SHEET NO.
94	•	COOK	860	597
STA. 2200+00.00		TO STA. 2362+00.00		
FED. ROAD DIST. NO.	ILLINOIS	FED. AID PROJECT		

• (1516.1, 1717 & 1818) R-5

62694

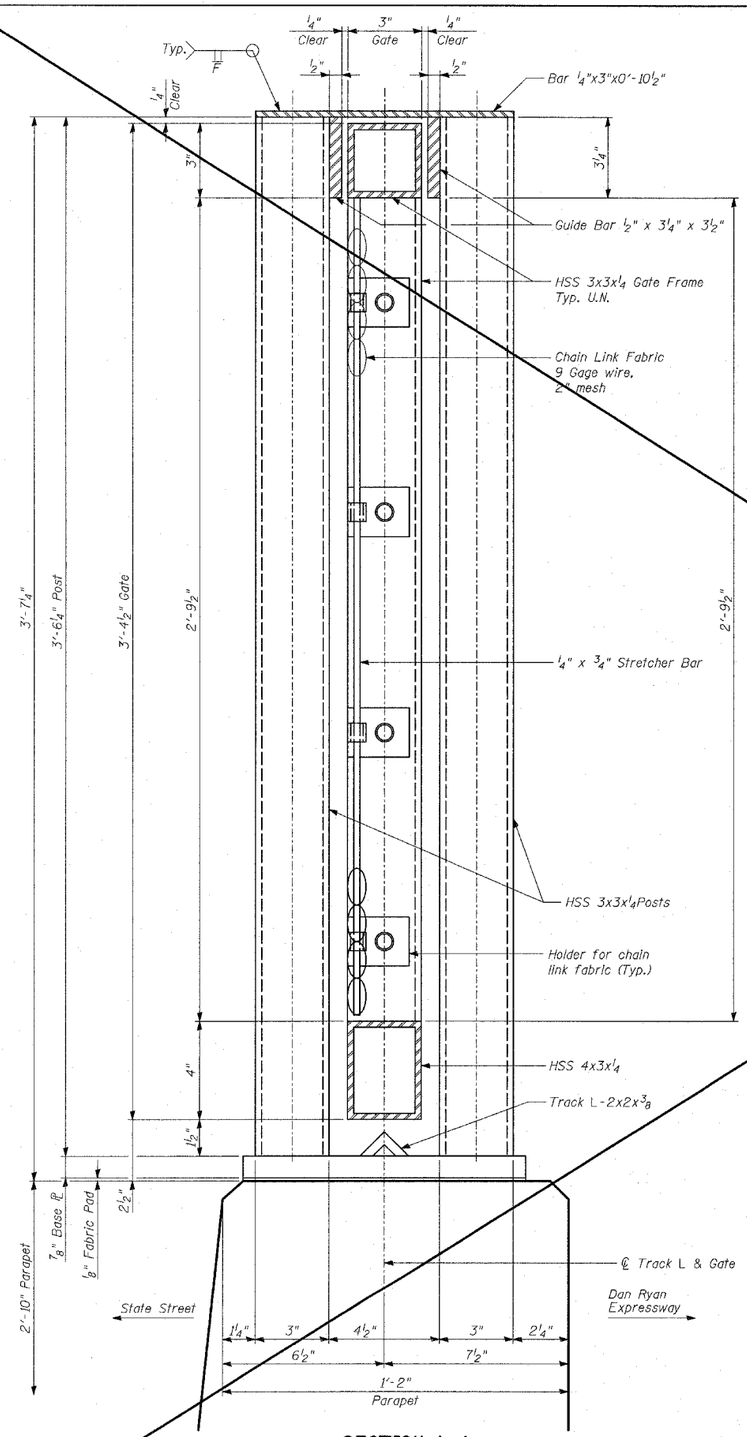

SECTION A-A

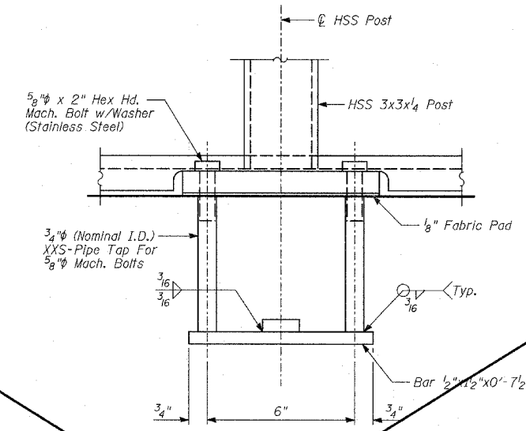

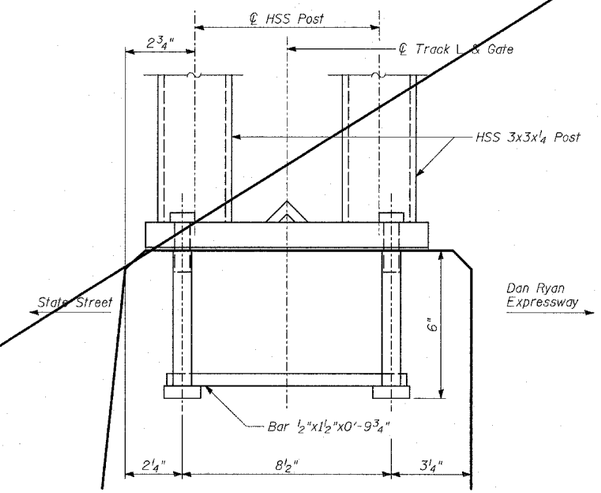

ANCHOR BOLT DETAILS

In lieu of the cast-in-place anchor bolt assembly shown, the Contractor has the option of drilling and epoxy grouting 5/8" diameter anchor rods with 1 1/4" diameter washers. The Contractor shall use the capsule or the adhesive cartridge type anchor rods that have been previously tested and given prior approval by the Department. The Contractor shall install these anchor rods in pre-drilled holes according to the manufacturer's recommendations and procedures. The capsule or adhesive cartridge shall be sealed with pre-measured amounts of adhesive chemical. Anchor rod threading to be peened after nuts are installed.

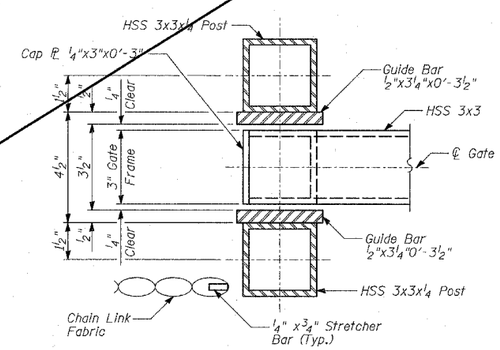

SECTION B-B

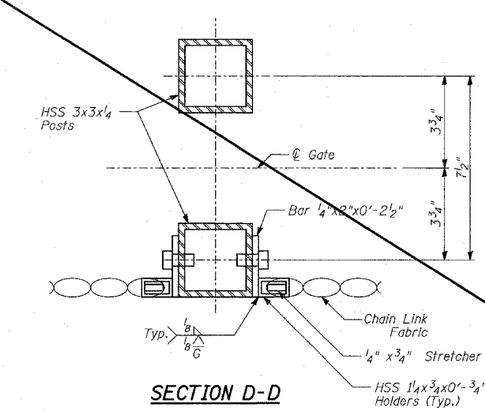

SECTION D-D

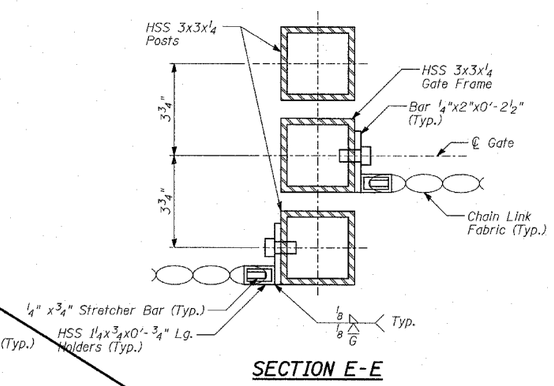

SECTION E-E

NOTES:

1. For Notes See Sheet 22 of 31.
2. For Anchor Bolt locations, see Details 1, 2 & 3 on Sheet 22 of 31.

SHEET 24 OF 31

REVISIONS	
NAME	DATE
REVISED	04/15/05

ILLINOIS DEPARTMENT OF TRANSPORTATION

F.A.I. 94 (DAN RYAN EXPRESSWAY)
RETAINING WALL ALONG STATE ST.
ENTRANCE RAMP AT 79TH ST.
WALL 69
GATE SECTIONS

S.N. 016-W975 — DESIGNED BY: MI, DJR
SCALE: N.T.S. — DRAWN BY: DJR
DATE: MARCH 18, 2005 — CHECKED BY: TD, MI

TY·LIN INTERNATIONAL