F.A.I. RTE.	SECTION	COUNTY	TOTAL SHEETS	SHEET NO.
94	*	COOK	860	655
STA. 2200+00.00		TO STA. 2362+00.00		
FED. ROAD DIST. NO.	ILLINOIS	FED. AID PROJECT		

* (1516.1, 1717 & 1818) R-8

62694

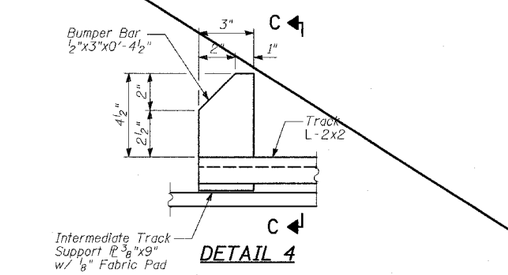

DETAIL 4

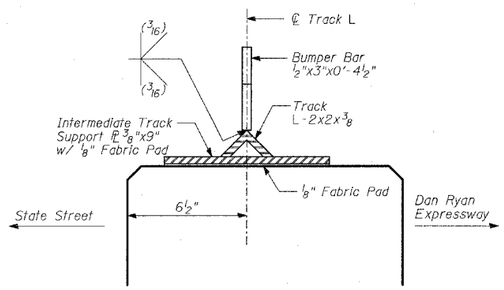

SECTION C-C

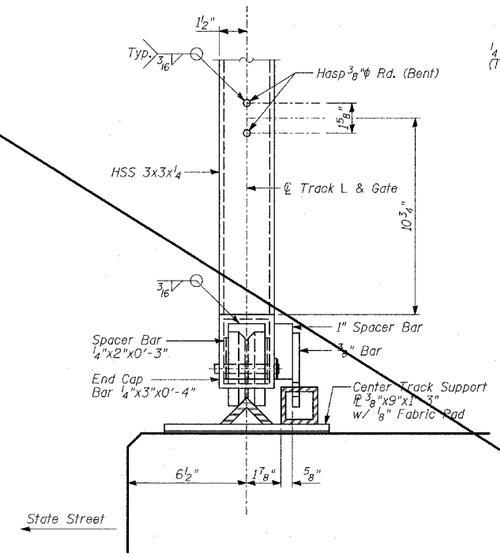

SECTION F-F

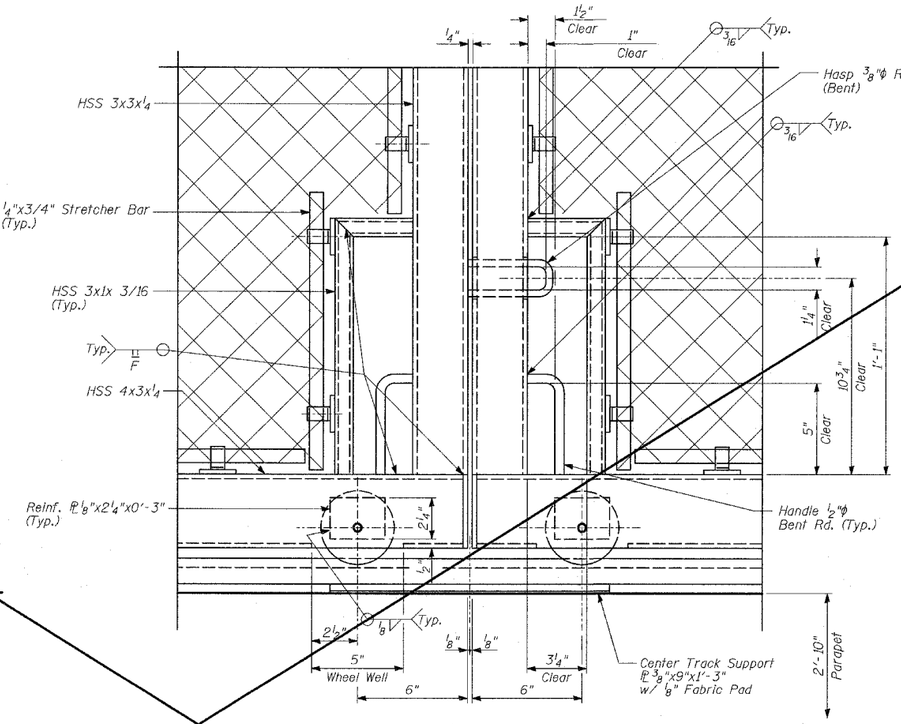

DETAIL 6

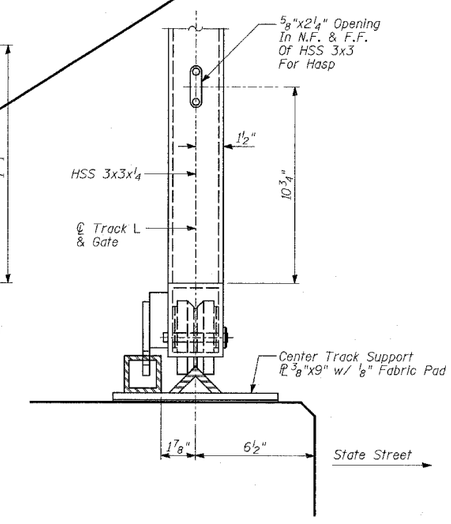

SECTION H-H

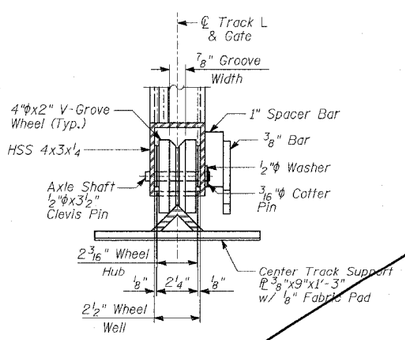

DETAIL 7

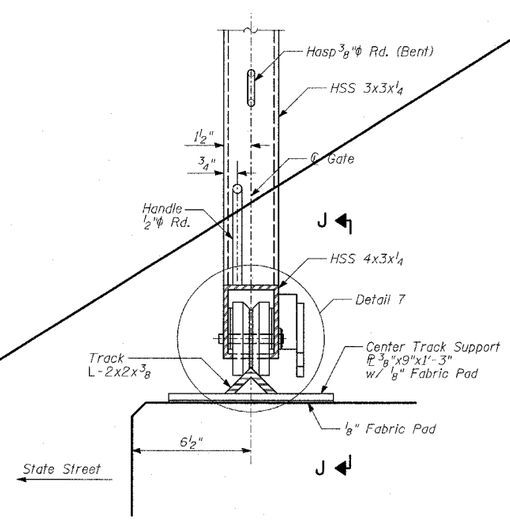

SECTION G-G

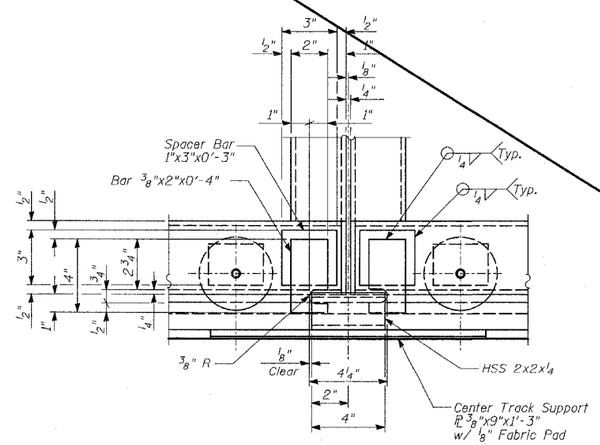

SECTION J-J

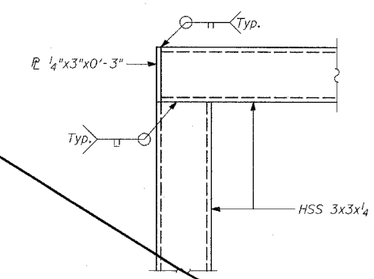

DETAIL 5

SHEET 15 OF 21

NOTES:

1. For notes, see Sheet 12 of 21.
2. For Anchor Bolt locations, see Sheet 12 of 21.
3. For Anchor Bolt details, see Sheet 14 of 21.
4. N.F. - denotes Near Face.
5. F.F. - denotes Far Face.

REVISIONS	
NAME	DATE
REVISED	04/15/05

ILLINOIS DEPARTMENT OF TRANSPORTATION

F.A.I. 94 (DAN RYAN EXPRESSWAY)
RETAINING WALL ALONG STATE ST.
EXIT RAMP AT AIS #2
AIS #2
GATE SECTIONS AND DETAILS

S.N. 016-W960 — DESIGNED BY: DJR
SCALE: N.T.S. — DRAWN BY: DJR
DATE: MARCH 18, 2005 — CHECKED BY: TD

T·Y·LIN INTERNATIONAL

$FILE$ $TIME$ $DATE$