F.A.I. RTE.	SECTION	COUNTY	TOTAL SHEETS	SHEET NO.
94	*	COOK	907	257
STA. 1200+00.00	TO STA. 1365+00			
FED. ROAD DIST. NO.	ILLINOIS	FED. AID PROJECT		

* (1516.1, 1717 & 1818) R-9

62695

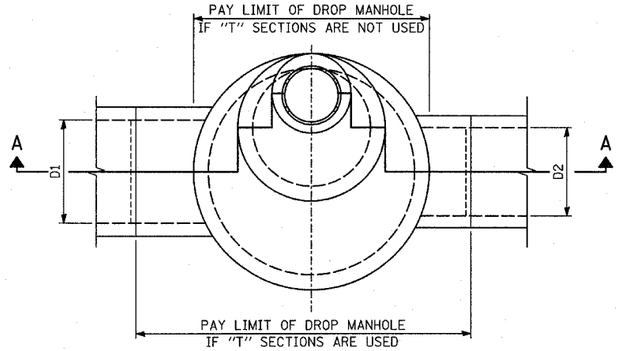

PLAN VIEW

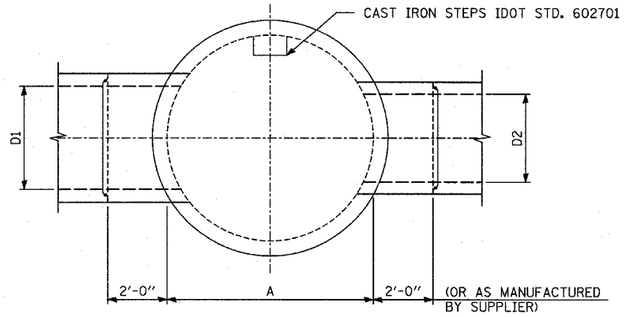

SECTIONAL PLAN

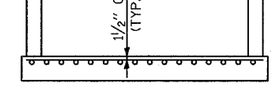

REINFORCED CAST-IN-PLACE CLASS SI CONCRETE

ALTERNATE BOTTOM SLAB

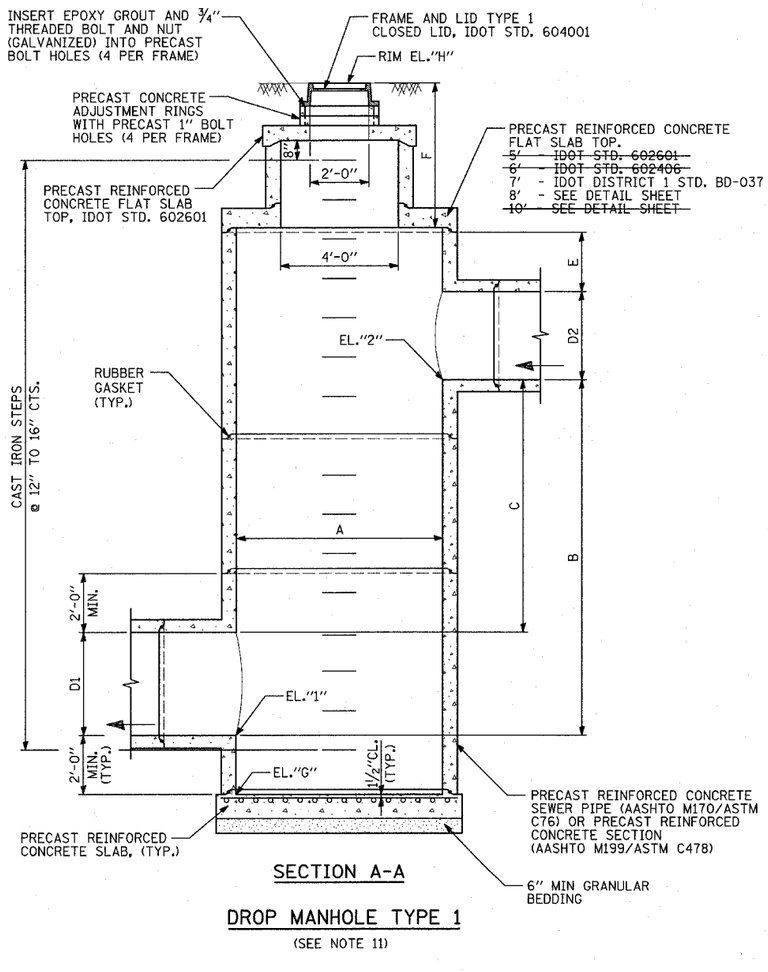

SECTION A-A

DROP MANHOLE TYPE 1

(SEE NOTE 11)

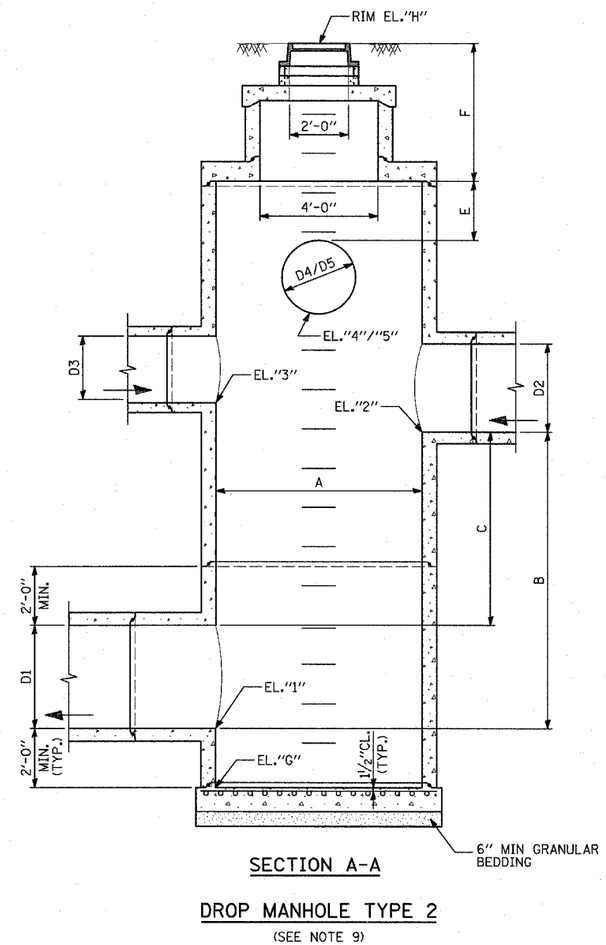

SECTION A-A

DROP MANHOLE TYPE 2

(SEE NOTE 9)

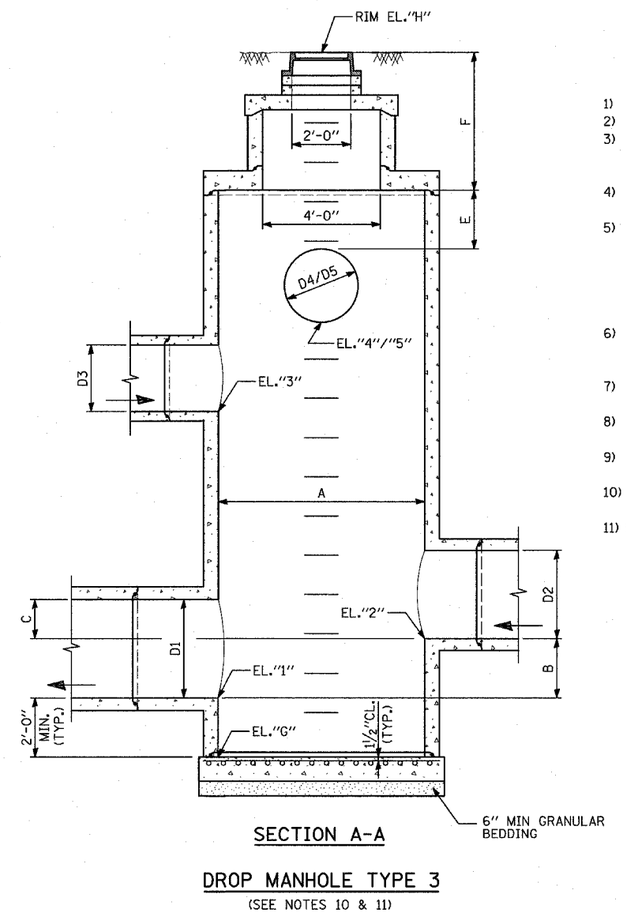

SECTION A-A

DROP MANHOLE TYPE 3

(SEE NOTES 10 & 11)

NOTES:

1) ALL DIMENSIONS ARE INSIDE DIMENSIONS.
2) UTILIZE PIPE "T" SECTIONS WHENEVER AVAILABLE.
3) PRESET PIPE OPENINGS IN PRECAST REINFORCED CONCRETE SECTIONS IF "T" SECTIONS AND SPECIAL FITTINGS ARE NOT AVAILABLE.
4) ROTATE FLAT SLAB AND MANHOLE RISER SO STEPS AVOID STORM SEWER OPENINGS.
5) CAST IRON STEPS SHALL BE GRAY IRON CONFORMING TO THE REQUIREMENTS OF ARTICLE 1006.14 OF THE STANDARD SPECIFICATIONS.
   STEPS SHALL BE EMBEDDED INTO THE WALL A MINIMUM OF THREE (3) INCHES. STEPS SHALL NOT BE EXTENDED ON THE OUTSIDE.
6) JOINT CONFIGURATION AND DIMENSIONS OF FLAT SLAB TOP SHALL MATCH AND FIT THE RISER JOINT DETAIL.
7) LIFTING DEVICES SHALL BE APPROVED BY THE ENGINEER.
8) ALL WORK SHALL BE AS PER AASHTO REQUIREMENTS. ASTM IS LISTED AS SUPPLEMENTARY.
9) SIMILAR TO TYPE 1, ALSO WITH SEWERS D3, D4 AND D5.
10) SIMILAR TO TYPE 1, ALSO WITH SEWERS D3, D4, D5 AND LOWER D2.
11) DROP MANHOLE TYPE 1 AND TYPE 3 ARE NOT USED ON THIS PROJECT.

DROP MANHOLE SCHEDULE

STRUCT NUMBER	TYPE	LOCATION	STATION	OFFSET	DIMENSIONS										ELEVATIONS (FT)						
					A (FT)	B (FT)	C (FT)	D1 (IN)	D2 (IN)	D3 (IN)	D4 (IN)	D5 (IN)	E (FT)	F (FT)	1	2	3	4	5	G	H
3821	2	SB DR	1360+98.67	124.42 LT	8	8.19	5.94	27	18	24			2.00	5.89	-15.80	-7.61	-6.00			-17.80	3.89
2412	3	SB DR	1327+60.84	81.46 LT	7	0.50		18	12	18			2.00	4.14	-16.31	-15.81	-10.28			-18.31	-2.64

TY·LIN INTERNATIONAL

REVISIONS	
NAME	DATE
REVISED	04/15/05

ILLINOIS DEPARTMENT OF TRANSPORTATION

F.A.I. 94 (DAN RYAN EXPRESSWAY)

DRAINAGE STRUCTURE DETAILS
DROP MANHOLE

SCALE: NONE DRAWN BY: RD

DATE: MARCH 25, 2005 CHECKED BY: DA