| F.A.I. RTE. | SECTION | COUNTY | TOTAL SHEETS | SHEET NO. |
|---|---|---|---|---|
| 94 | * | COOK | 907 | 327 |
| STA. | | TO STA. | | |
| FED. ROAD DIST. NO. | ILLINOIS | FED. AID PROJECT | | |

* (1516.1, 1717 & 1818) R-9

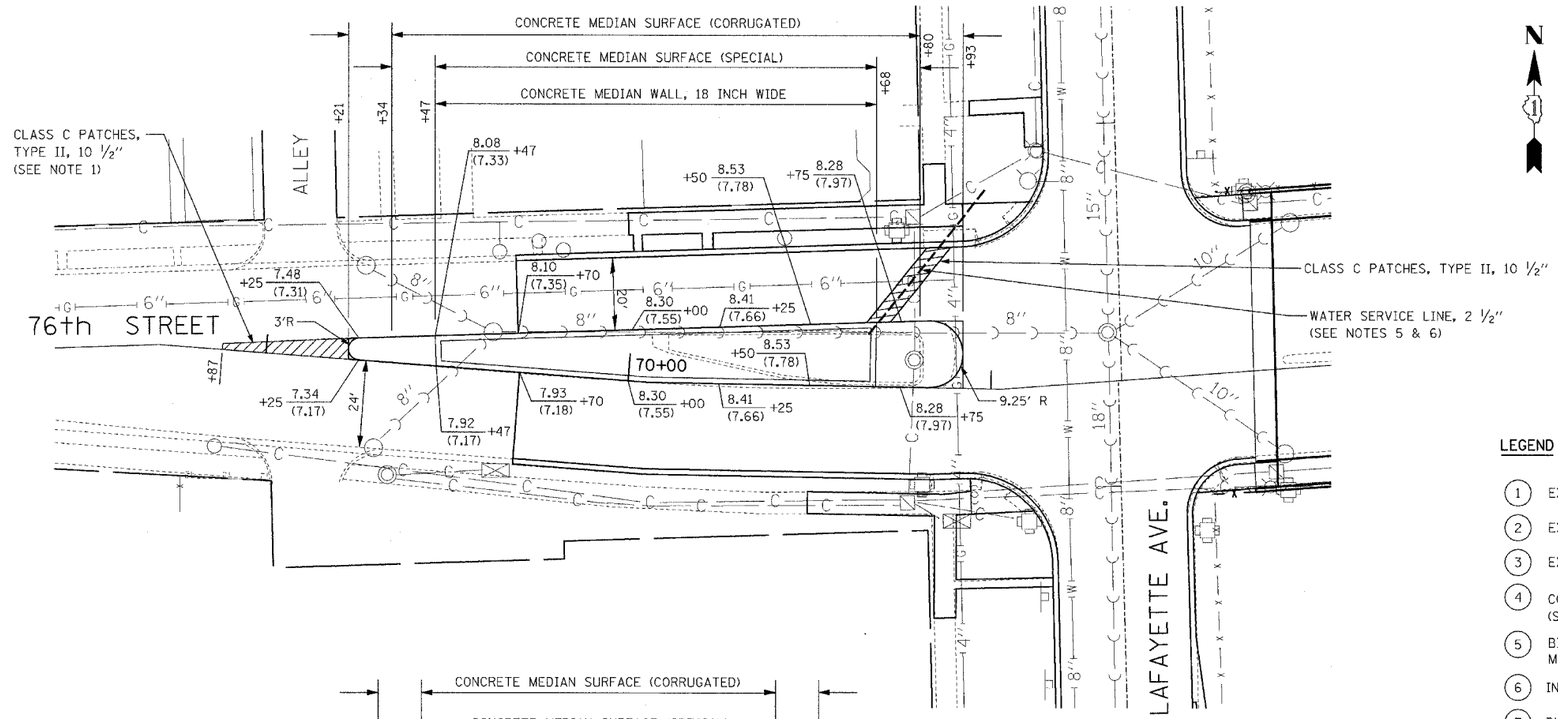


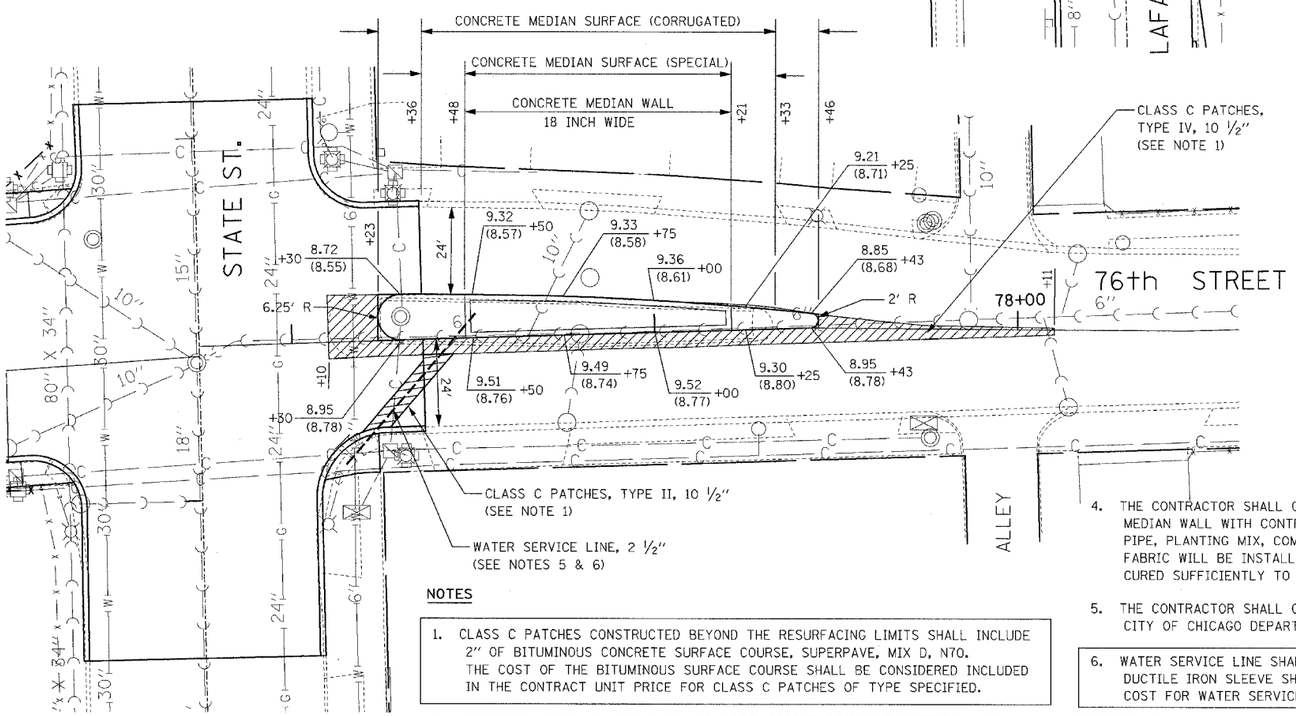


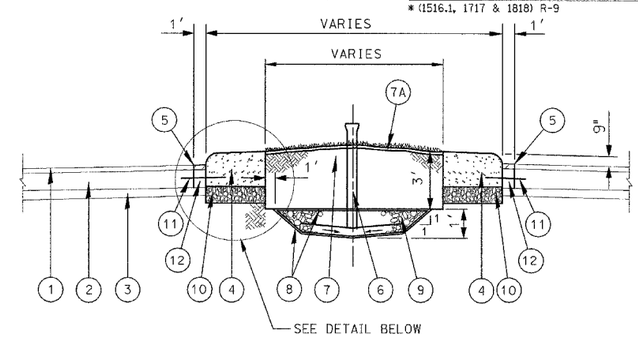


## PROPOSED LANDSCAPE MEDIAN SECTION

### LEGEND

1. EXISTING BITUMINOUS CONCRETE PAVEMENT, 3"±
2. EXISTING P.C.C. BASE COURSE, 10"±
3. EXISTING GRANULAR SUBBASE MATERIAL
4. CONCRETE MEDIAN WALL, 18 INCH WIDE (SEE NOTE 7)
5. BITUMINOUS CONCRETE SURFACE SUPERPAVE MIXTURE D, N70, 2"
6. INSPECTION PIPE, 4" (SEE NOTE 2)
7. PLANTING MIX FURNISH AND PLACE 36" (SEE NOTE 2)
7A. COMPOST FURNISH AND PLACE, 4" (SEE NOTE 2)
8. GEOTECHNICAL FABRIC (SEE NOTE 2)
9. POROUS GRANULAR MATERIAL (SEE NOTE 2)
10. SUB-BASE GRANULAR MATERIAL, TYPE B, 6"
11. DEFORMED EPOXY COATED TIE BAR, #5 X 30" @ 30" O.C., DRILL AND GROUT INTO EXISTING PAVEMENT (INCLUDED IN COST OF CONCRETE MEDIAN WALL, 18" WIDE) (SEE NOTE 8)
12. P.C.C. BASE COURSE, 10-1/2 INCH

### LEGEND

CLASS C PATCHES, 10 1/2"

X.XX / (X.XX) — TOP OF CURB ELEVATION / EDGE OF PAVEMENT ELEVATION

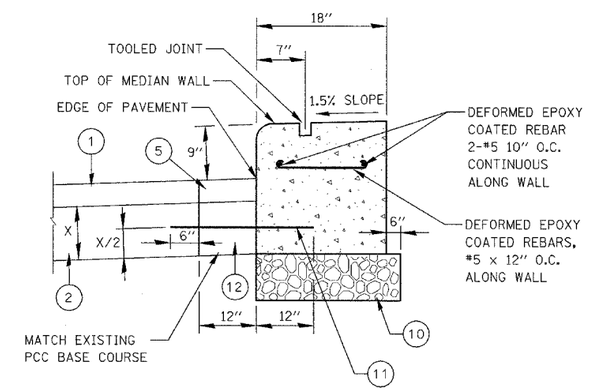


## CONCRETE MEDIAN WALL, 18 INCH WIDE

20 0 20 40
SCALE IN FEET

### NOTES

1. CLASS C PATCHES CONSTRUCTED BEYOND THE RESURFACING LIMITS SHALL INCLUDE 2" OF BITUMINOUS CONCRETE SURFACE COURSE, SUPERPAVE, MIX D, N70. THE COST OF THE BITUMINOUS SURFACE COURSE SHALL BE CONSIDERED INCLUDED IN THE CONTRACT UNIT PRICE FOR CLASS C PATCHES OF TYPE SPECIFIED.
2. INSPECTION PIPE, PLANTING MIX, COMPOST, POROUS GRANULAR MATERIAL, AND GEOTECHNICAL FABRIC WILL BE INSTALLED BY CONTRACT NO. 62934.
3. THE EXCAVATION REQUIRED FOR THE INSTALLATION OF PLANTING MIX, COMPOST, AND POROUS GRANULAR MATERIAL IS INCLUDED IN THE CONTRACT UNIT PRICE FOR MEDIAN AND PAVEMENT REMOVAL (SPECIAL).
4. THE CONTRACTOR SHALL COORDINATE THE CONSTRUCTION OF THE CONCRETE MEDIAN WALL WITH CONTRACT NO. 62934 TO INSURE THAT THE INSPECTION PIPE, PLANTING MIX, COMPOST, POROUS GRANULAR MATERIAL, AND GEOTECHNICAL FABRIC WILL BE INSTALLED IMMEDIATELY AFTER THE CONCRETE MEDIAN WALL IS CURED SUFFICIENTLY TO ALLOW THE INSTALLATION OF THESE ITEMS.
5. THE CONTRACTOR SHALL COORDINATE THE LOCATION OF WATER SERVICE LINE WITH THE CITY OF CHICAGO DEPARTMENT OF WATER MANAGEMENT AND WITH CONTRACT NO. 62934.
6. WATER SERVICE LINE SHALL BE INSTALLED IN A 6" DUCTILE IRON SLEEVE. THE DUCTILE IRON SLEEVE SHALL BE CONSIDERED INCLUDED IN THE CONTRACT UNIT COST FOR WATER SERVICE LINE, 2 1/2".
7. THE BOTTOM OF THE CONCRETE MEDIAN WALL SHALL BE POURED TO MEET THE BOTTOM OF THE EXISTING PCC BASE. NO ADDITIONAL PAYMENT WILL BE MADE FOR THIS WORK.
8. TIE BARS SHALL BE DRILLED AND GROUTED AT THE MID-POINT OF THE EXISTING PCC BASE.

KNIGHT
Engineers & Architects

| REVISIONS | |
|---|---|
| NAME | DATE |
| REVISED | 05/06/05 |

ILLINOIS DEPARTMENT OF TRANSPORTATION

F.A.I. 94 (DAN RYAN EXPRESSWAY)

# 76TH STREET MEDIAN PLAN

SCALE: AS SHOWN — DRAWN BY: WHI

DATE: MARCH 25, 2005 — CHECKED BY: JCM

FILE: L:\6592.02\Cad\Sheets\Revised 17b\ 05-06-05\653202 76th Median Rev050605_3.dgn