F.A.I. RTE.	SECTION	COUNTY	TOTAL SHEETS	SHEET NO.
94	•	COOK	907	466
STA. 1200+00.00	TO STA. 1365+00			
FED. ROAD DIST. NO.	ILLINOIS	FED. AID PROJECT		

• (1516.1, 1717 & 1818) R-9

62695

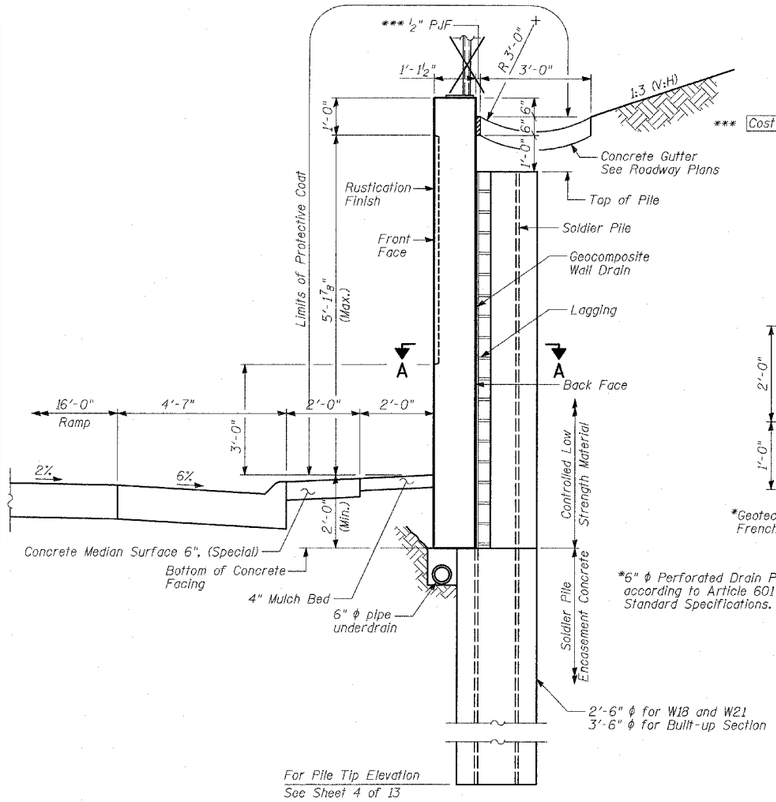

TYPICAL CROSS-SECTION

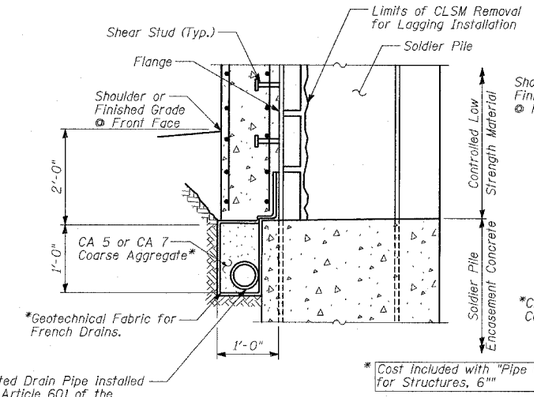

PIPE UNDERDRAIN DETAIL AT SOLDIER PILE

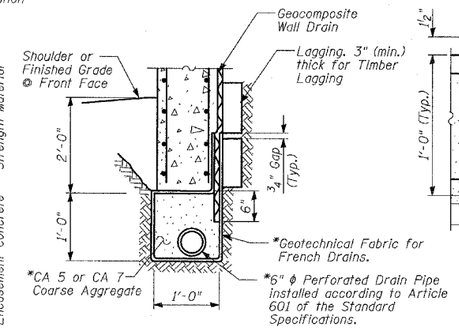

PIPE UNDERDRAIN DETAIL BETWEEN SOLDIER PILES

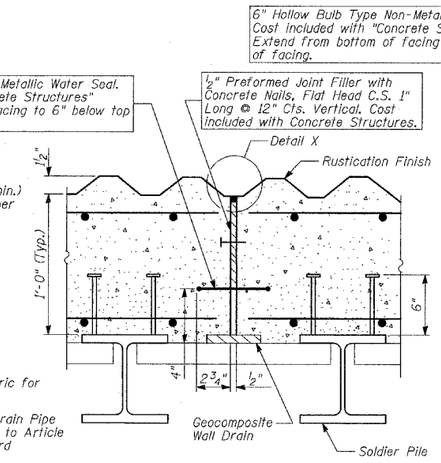

EXPANSION JOINT DETAILS
(Joint in Valley)

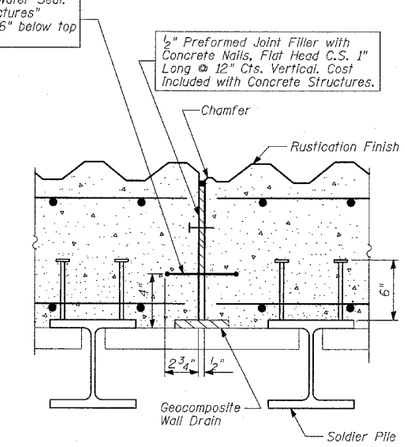

EXPANSION JOINT DETAILS
(Joint on Diagonal)

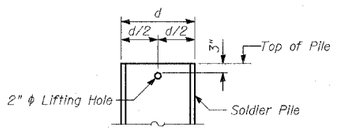

LIFTING HOLE DETAIL

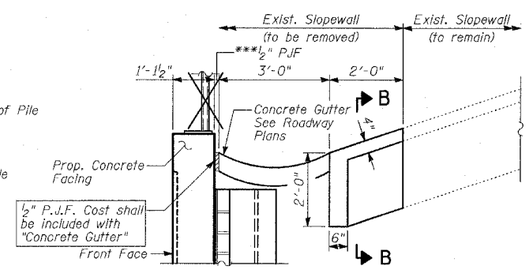

SECTION THRU SLOPEWALL
(Under Pedestrian Bridge)

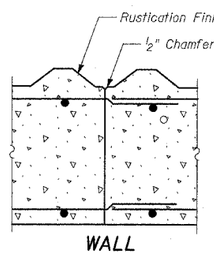

WALL
(Joint in Valley)

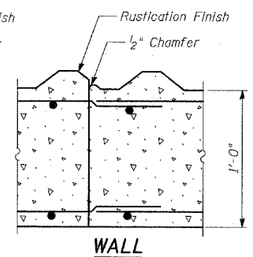

WALL
(Joint on Diagonal)

CONSTRUCTION JOINT DETAILS

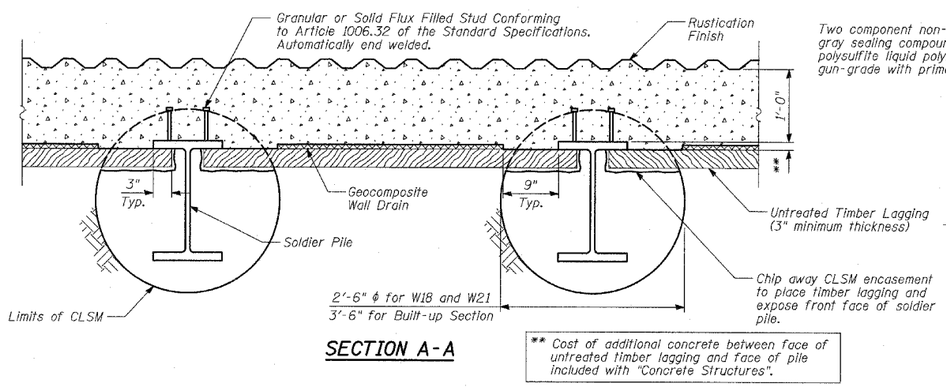

SECTION A-A

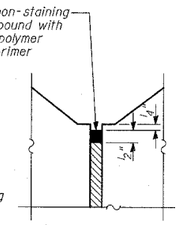

DETAIL X

NOTES:

1. The geocomposite wall drain shall be constructed according to Section 591 of the Standard Specifications.
2. The Contractor is responsible for the design and performance of the lagging using no less than 3" nominal rough-sawn thickness and the minimum tabulated unit stress in bending (F_b), used in the design of timber lagging shall be 1000 psi.
3. Lagging between piles P-43 and P-44 shall be HSS12x4x$\frac{3}{8}$.
4. Steel tube lagging shall be cleaned and given one shop coat of Inorganic Zinc-Rich primer.
5. Stud shear connectors shall be ¾" ϕ x 6" granular or solid flux filled headed studs, automatically end welded to the front flange of the soldier piles.

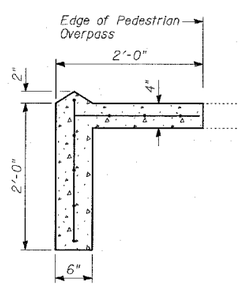

SECTION B-B

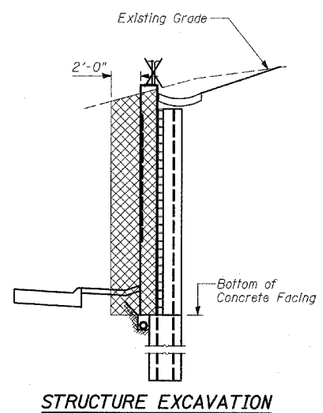

STRUCTURE EXCAVATION
(For Proposed Wall)

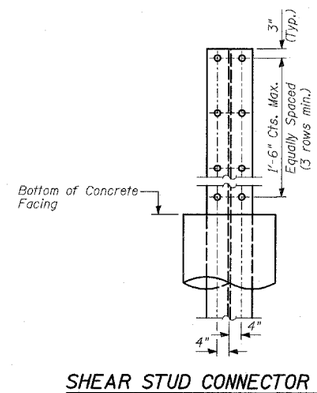

SHEAR STUD CONNECTOR DETAIL

BILL OF MATERIAL

ITEM	UNIT	TOTAL
Structure Excavation	CU YD	216
Stud Shear Connectors	EACH	430
Untreated Timber Lagging	SQ FT	1,679
Geocomposite Wall Drain	SQ YD	217
Pipe Underdrains for Structures, 6"	FOOT	358
Slopewall Removal	SQ YD	43
Slopewall, 4"	SQ YD	11

SHEET 7 OF 13

TYLIN INTERNATIONAL

REVISIONS	
NAME	DATE
REVISED	04/15/05

ILLINOIS DEPARTMENT OF TRANSPORTATION

F.A.I. 94 (DAN RYAN EXPRESSWAY)
RETAINING WALL ALONG LAFAYETTE AVE.
EXIT RAMP AT 93RD ST.
WALL 35
WALL CROSS SECTIONS & DETAILS

S.N. 016-W947 — DESIGNED BY: MI, MAF
SCALE: N.T.S. — DRAWN BY: MAF, DJR
DATE: MARCH 25, 2005 — CHECKED BY: TD, MI

STRUCTURE NO.