F.A.I. RTE.	SECTION	COUNTY	TOTAL SHEETS	SHEET NO.
94	•	COOK	907	488
STA. 1200+00.00	TO STA. 1365+00			
FED. ROAD DIST. NO.	ILLINOIS	FED. AID PROJECT		

• (1516.1, 1717 & 1818) R-9

62695

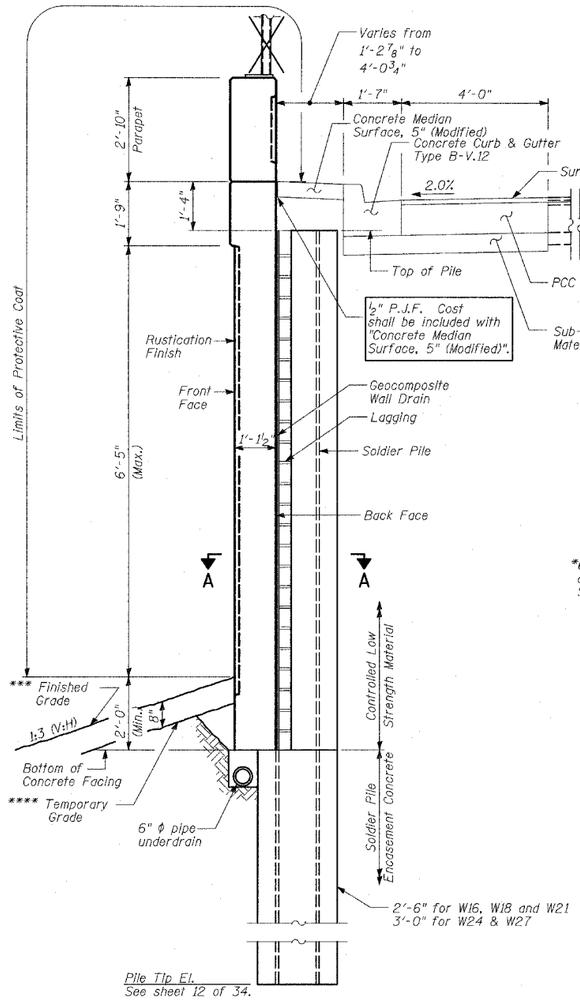

TYPICAL CROSS-SECTION

*** Contract 62593 - Sta. 1223+70.00± to Sta. 1231+63.49
Contract 62695 - Sta. 1220+22.59 to Sta. 1223+70.00±

**** Contract 62695 - Sta. 1223+70± to Sta. 1231+63.49

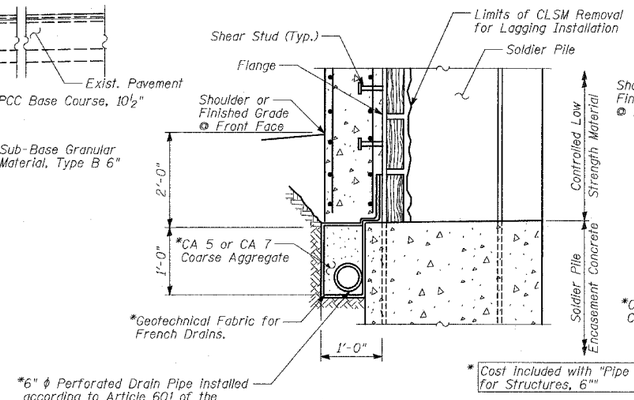

PIPE UNDERDRAIN DETAIL AT SOLDIER PILE

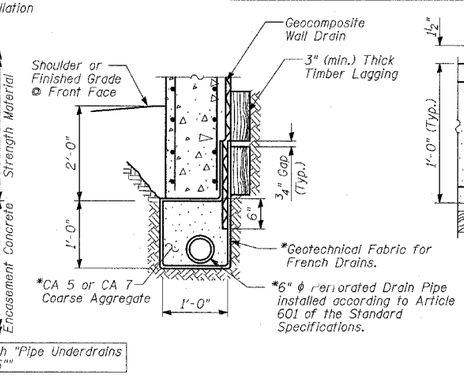

* Cost included with "Pipe Underdrains for Structures, 6""

PIPE UNDERDRAIN DETAIL BETWEEN SOLDIER PILES

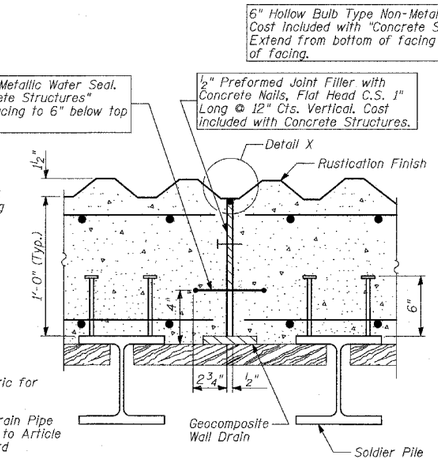

EXPANSION JOINT DETAILS
(Joint in Valley)

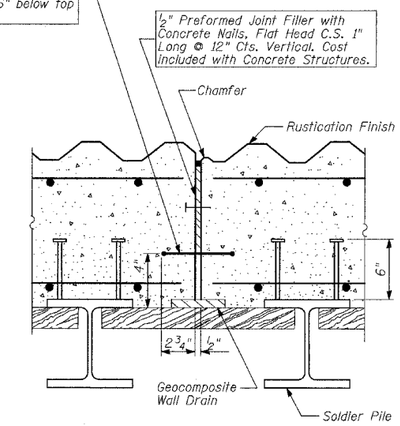

EXPANSION JOINT DETAILS
(Joint on Diagonal)

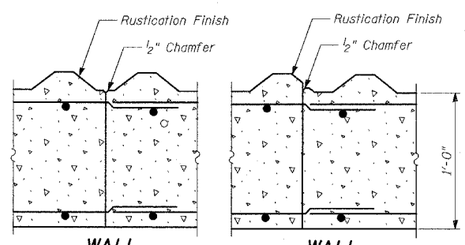

WALL
(Joint in Valley)

WALL
(Joint on Diagonal)

CONSTRUCTION JOINT DETAILS

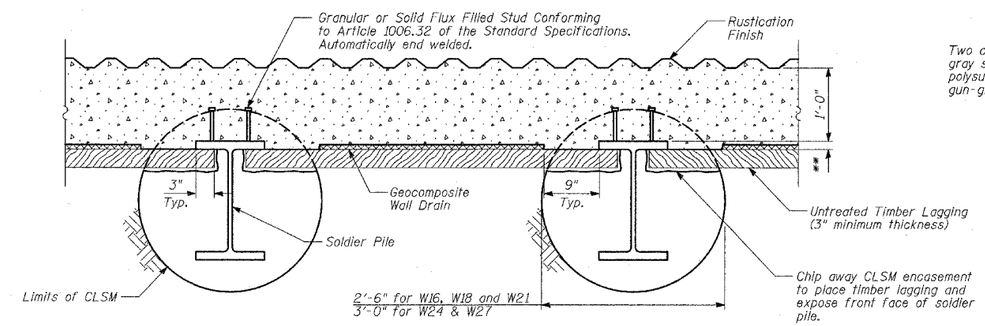

** Cost of additional concrete between face of untreated timber lagging and face of pile included with "Concrete Structures".

SECTION A-A

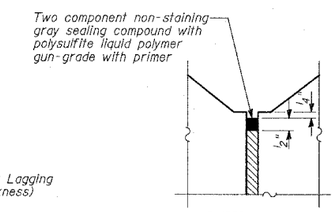

DETAIL X

NOTES:

1. The geocomposite wall drain shall be constructed according to Section 591 of the Standard Specifications.
2. The Contractor is responsible for the design and performance of the lagging using no less than 3" nominal rough-sawn thickness and the minimum tabulated unit stress in bending (f_b), used in the design of timber lagging shall be 1000 psi.
3. Stud shear connectors shall be 3/4" ϕ x 6" granular or solid flux filled headed studs, automatically end welded to the front flange of the soldier piles.

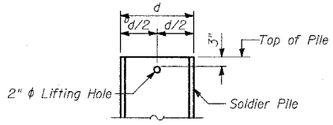

LIFTING HOLE DETAIL

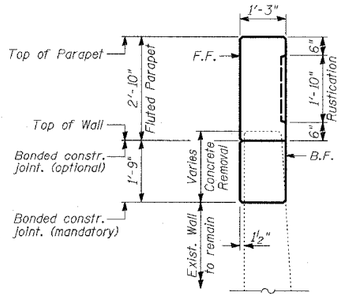

PARAPET REMOVAL AND REPLACEMENT

(Sta. 1219+12.32 to Sta. 1220+22.59 & Sta. 1231+63.49 to Sta. 1232+28.44)

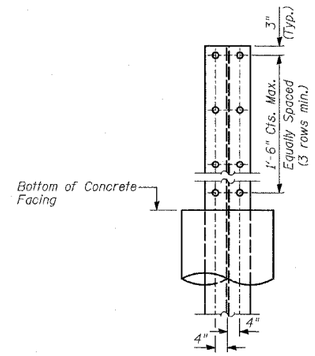

SHEAR STUD CONNECTOR DETAIL

BILL OF MATERIAL

ITEM	UNIT	TOTAL
Stud Shear Connectors	EACH	1,890
Untreated Timber Lagging	SQ FT	6,869
Geocomposite Wall Drain	SQ YD	827
Pipe Underdrains for Structures, 6"	FOOT	1,141

SHEET 16 OF 34

REVISIONS	
NAME	DATE
REVISED	04/15/05

ILLINOIS DEPARTMENT OF TRANSPORTATION

F.A.I. 94 (DAN RYAN EXPRESSWAY)
RETAINING WALL ALONG LAFAYETTE AVE.
93RD ST. TO 91ST ST.
WALL 36
WALL CROSS SECTIONS & DETAILS

S.N. 016-W948 — DESIGNED BY: MI, DJR
SCALE: N.T.S. — DRAWN BY: DJR
DATE: MARCH 25, 2005 — CHECKED BY: TD, MI

TYLIN INTERNATIONAL

$FILES
$TIMES
$DATES