F.A.I. RTE.	SECTION	COUNTY	TOTAL SHEETS	SHEET NO.
94	•	COOK	907	570

STA. 1200+00.00 TO STA. 1365+00

FED. ROAD DIST. NO. | ILLINOIS | FED. AID PROJECT

• (1516.1, 1717 & 1818) R-9

62695

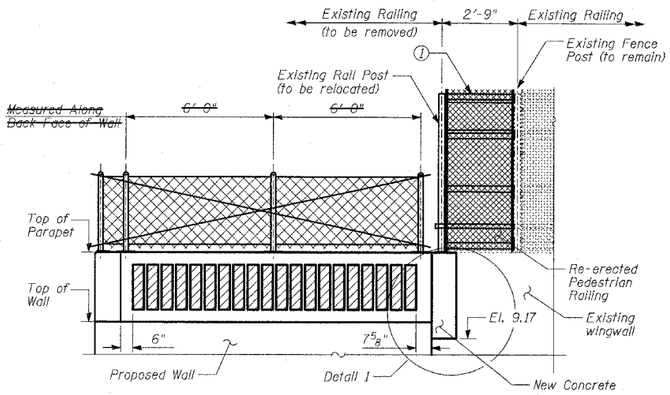

BACK FACE ELEVATION

(At Corner Garden)

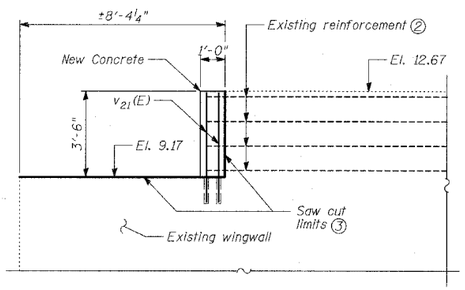

DETAIL 1

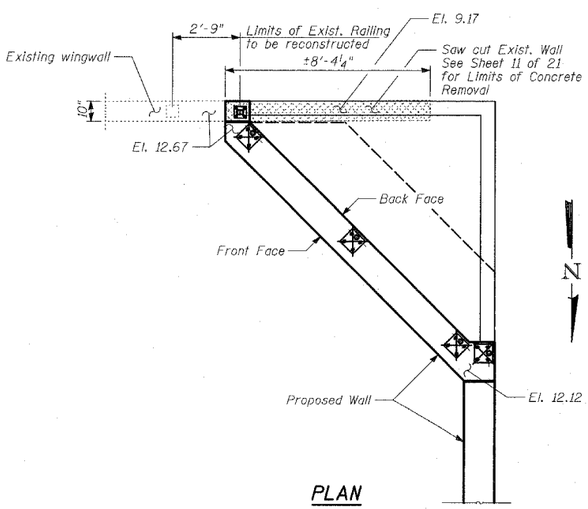

PLAN

(At Corner Garden)

PILE LAYOUT

Pile	Station at Working Point	Top of Parapet El.	Top of Pile El.	Bot. of Wall El.	Section	Pile Tip El.	Pile Length
P-1	1314+55.93	11.02	6.85	4.24	HP14x117	-21.82	28'-8"
P-2	1314+62.82	10.99	6.82	4.01		-22.01	28'-10"
P-3	1314+69.72	10.96	6.79	3.78		-22.29	29'-1"
P-4	1314+76.61	10.93	6.76	3.55		-22.49	29'-3"
P-5	1314+83.51	10.90	6.73	3.32		-22.69	29'-5"
P-6	1314+90.40	10.87	6.70	3.10		-22.97	29'-8"
P-7	1314+97.29	10.84	6.67	2.87		-23.16	29'-10"
P-8	1315+04.19	10.81	6.64	2.64	HP14x117	-23.44	30'-1"
P-9	1315+16.48	10.75	6.59	2.16	W18x106	-23.91	30'-6"
P-10	1315+24.04	10.72	6.56	2.02		-24.03	30'-7"
P-11	1315+31.61	10.69	6.52	1.87		-24.14	30'-8"
P-12	1315+39.17	10.66	6.49	1.73		-24.34	30'-10"
P-13	1315+46.73	10.62	6.46	1.58		-24.46	30'-11"
P-14	1315+54.29	10.59	6.42	1.44		-24.58	31'-0"
P-15	1315+61.85	10.56	6.39	1.30		-24.78	31'-2"
P-16	1315+69.41	10.53	6.36	1.15		-24.89	31'-3"
P-17	1315+76.97	10.49	6.33	1.01		-25.01	31'-4"
P-18	1315+84.53	10.46	6.29	0.86		-25.21	31'-6"
P-19	1315+92.09	10.43	6.26	0.72		-25.32	31'-7"
P-20	1315+99.64	10.39	6.23	0.57		-25.44	31'-8"
P-21	1316+07.16	10.27	6.11	0.45		-25.56	31'-8"
P-22	1316+14.73	10.06	5.90	0.34		-25.69	31'-7"
P-23	1316+22.30	9.85	5.69	0.24		-25.81	31'-6"
P-24	1316+29.87	9.64	5.48	0.14		-25.94	31'-5"
P-25	1316+37.44	9.43	5.27	0.03		-25.98	31'-3"
P-26	1316+45.01	9.22	5.06	-0.07		-26.11	31'-2"
P-27	1316+52.58	9.01	4.85	-0.17		-26.24	31'-1"
P-28	1316+60.15	8.80	4.64	-0.28		-26.28	30'-11"
P-29	1316+67.71	8.59	4.43	-0.38		-26.41	30'-10"
P-30	1316+75.28	8.38	4.22	-0.48		-26.53	30'-9"
P-31	1316+82.85	8.17	4.01	-0.59		-26.66	30'-8"
P-32	1316+90.42	7.96	3.80	-0.69	W18x106	-26.70	30'-6"
P-33	1316+97.98	7.75	3.59	-0.80	HP14x117	-22.83	26'-5"
P-34	1317+05.55	7.54	3.38	-0.90		-22.96	26'-4"
P-35	1317+13.11	7.33	3.17	-1.00		-23.08	26'-3"
P-36	1317+20.68	7.12	2.96	-1.11		-23.13	26'-1"
P-37	1317+28.24	6.91	2.75	-1.21		-23.25	26'-0"
P-38	1317+35.81	6.70	2.54	-1.31		-23.38	25'-11"
P-39	1317+43.37	6.49	2.33	-1.42		-23.42	25'-9"
P-40	1317+50.94	6.28	2.12	-1.52		-23.55	25'-8"
P-41	1317+58.50	6.06	1.89	-1.62		-23.69	25'-7"
P-42	1317+66.06	5.82	1.65	-1.73		-23.76	25'-5"
P-43	1317+73.63	5.58	1.42	-1.83		-23.83	25'-3"
P-44	1317+81.19	5.34	1.18	-1.93		-23.99	25'-2"
P-45	1317+88.75	5.10	0.94	-2.04		-24.06	25'-0"
P-46	1317+96.31	4.86	0.70	-2.14		-24.22	24'-11"
P-47	1318+03.88	4.62	0.46	-2.25		-24.29	24'-9"
P-48	1318+11.44	4.39	0.22	-2.35	HP14x117	-24.36	24'-7"

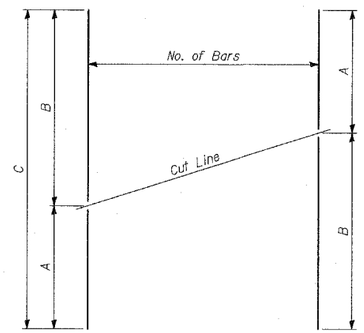

SERIES OF BAR CUTTING DIAGRAM

See table for dimensions. Make all cuts normal to bar axis

BAR TABLE SCHEDULE

Bar	No. of Sets Req'd	No. of Bars Per Set	A	B	C
v(E)	1	31	3'-6"	4'-5"	7'-11"
v_1(E)	1	26	4'-5"	5'-2"	9'-7"
v_2(E)	1	31	5'-5"	5'-10"	11'-3"
v_3(E)	1	31	5'-10"	6'-4"	12'-2"
v_4(E)	2	31	6'-4"	6'-9"	13'-1"
v_5(E)	1	31	6'-4"	5'-11"	12'-3"
v_6(E)	1	31	5'-11"	5'-6"	11'-5"
v_7(E)	1	31	5'-6"	5'-1"	10'-7"
v_8(E)	1	31	5'-1"	4'-8"	9'-9"
v_9(E)	1	31	4'-8"	4'-1"	8'-9"
v_{10}(E)	1	31	4'-1"	3'-7"	7'-8"

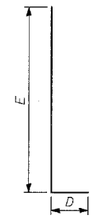

MARK TABLE

Bar	D	E
d (E)	11"	4'-4"
d_2(E)	6"	2'-6"
d_3(E)	6"	2'-6"

BARS d(E), d_2(E) & d_3(E)

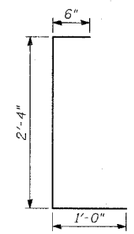

BAR d_4(E)

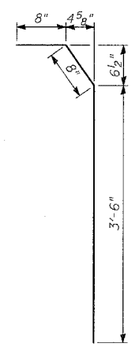

BAR d_5(E)

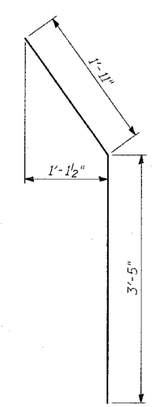

BAR d_7(E)

BILL OF MATERIAL

Bar	No.	Size	Length	Shape
d(E)	119	#4	5'-3"	L
d_1(E)	98	#6	6'-6"	—
d_2(E)	264	#4	3'-0"	L
d_3(E)	264	#5	3'-0"	L
d_4(E)	264	#4	3'-10"	[
d_5(E)	264	#5	4'-10"	]
d_6(E)	21	#5	4'-3"	—
d_7(E)	21	#5	5'-4"	)
e(E)	16	#5	32'-2"	—
e_1(E)	8	#5	24'-8"	—
e_2(E)	24	#4	29'-8"	—
e_3(E)	8	#5	29'-8"	—
e_4(E)	8	#8	29'-8"	—
e_5(E)	30	#4	31'-8"	—
e_6(E)	8	#5	32'-2"	—
e_7(E)	10	#8	34'-6"	—
h(E)	121	#5	32'-2"	—
h_1(E)	17	#5	24'-8"	—
h_2(E)	68	#5	29'-8"	—
v(E)	31	#4	7'-11"	—
v_1(E)	26	#4	9'-7"	—
v_2(E)	31	#4	11'-3"	—
v_3(E)	31	#4	12'-2"	—
v_4(E)	62	#4	13'-1"	—
v_5(E)	31	#4	12'-3"	—
v_6(E)	31	#4	11'-5"	—
v_7(E)	31	#4	10'-7"	—
v_8(E)	31	#4	9'-9"	—
v_9(E)	31	#4	8'-9"	—
v_{10}(E)	31	#4	7'-8"	—
Reinforcement Bars, Epoxy Coated			POUND	18,080
Concrete Structures			CU YD	129
Protective Coat			SQ YD	429
Furnishing Soldier Piles (HP Section)			FOOT	644
Furnishing Soldier Piles (W Section)			FOOT	747
Drilling and Setting Soldier Piles (in Soil)			CU FT	7,669

Reinforcement bars designated (E) shall be epoxy coated.

REMOVAL LIMITS

① Existing Pedestrian Fence to be removed and re-erected for new wall construction.

② Existing Parapet reinforcement to be preserved after concrete removal. (Typ. each face) See notes 4.

③ Removal of existing retaining wall and parapet.

④ Cut-off and remove existing wall to a depth which will not interfere with new construction, or a minimum of 2 feet below finished grade.

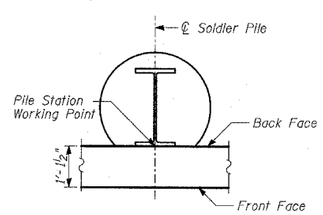

SOLDIER PILE WORKING POINT

LAP SPLICES

Bar	Lap
#4	1'-8"
#5	2'-2"
#6	2'-7"
#8	4'-6"

TY·LIN INTERNATIONAL

SHEET 6 OF 21

REVISIONS NAME	DATE
REVISED	04/15/05

ILLINOIS DEPARTMENT OF TRANSPORTATION

F.A.I. 94 (DAN RYAN EXPRESSWAY)
SOUTHBOUND EXIT RAMP RETAINING WALL
AT 79TH ST.
WALL 72

PILE LAYOUT, DETAILS & BILL OF MATERIAL

S.N. 016-W971 | DESIGNED BY: MI, MAF
SCALE: N.T.S. | DRAWN BY: MAF, DJR
DATE: MARCH 25, 2005 | CHECKED BY: TD, MI

$FILE$ $TIME$ $DATE$