F.A.I. RTE.	SECTION	COUNTY	TOTAL SHEETS	SHEET NO.
94	•	COOK	907	662
STA. 1200+00.00		TO STA. 1365+00		
FED. ROAD DIST. NO.	ILLINOIS	FED. AID PROJECT		

• (1516.1, 1717 & 1818) R-9

62695

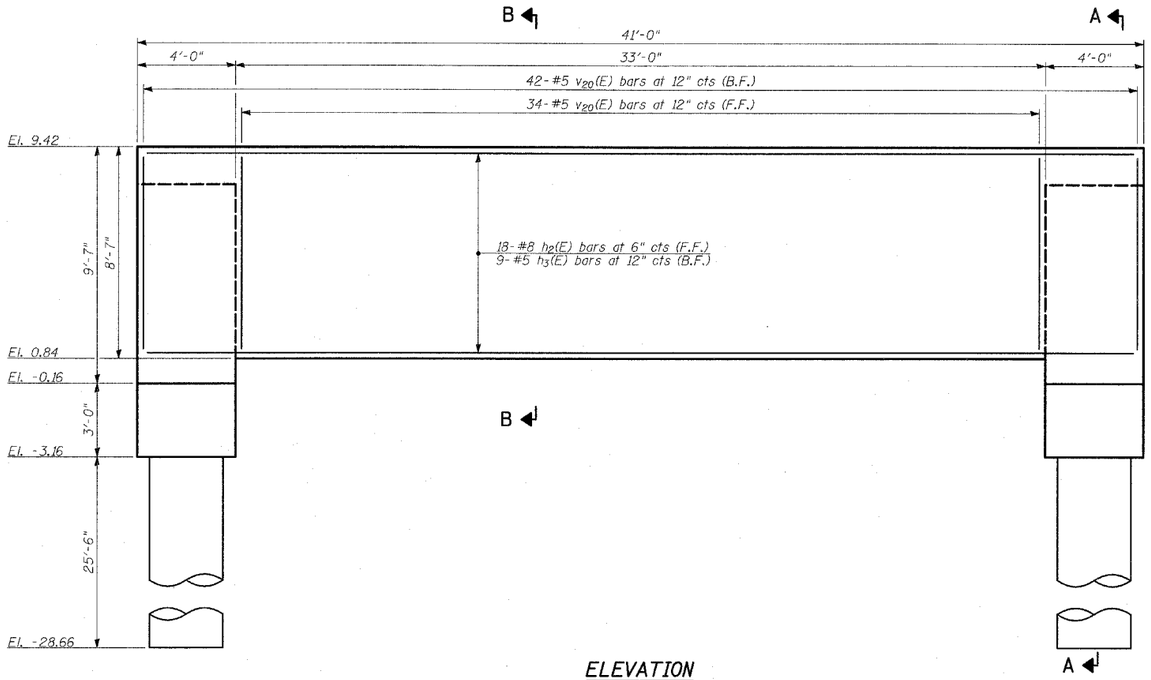

ELEVATION

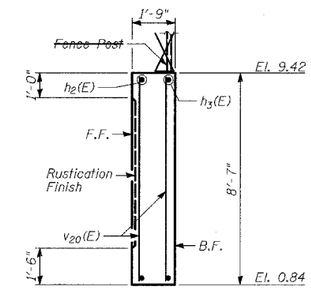

SECTION B-B

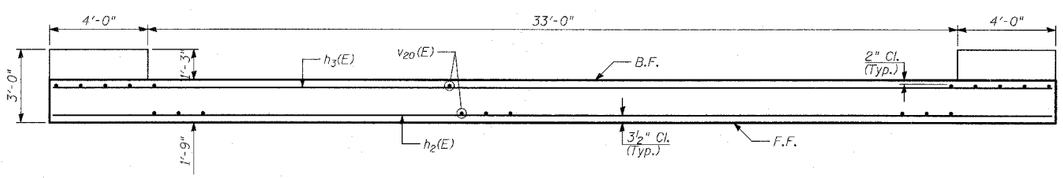

PLAN

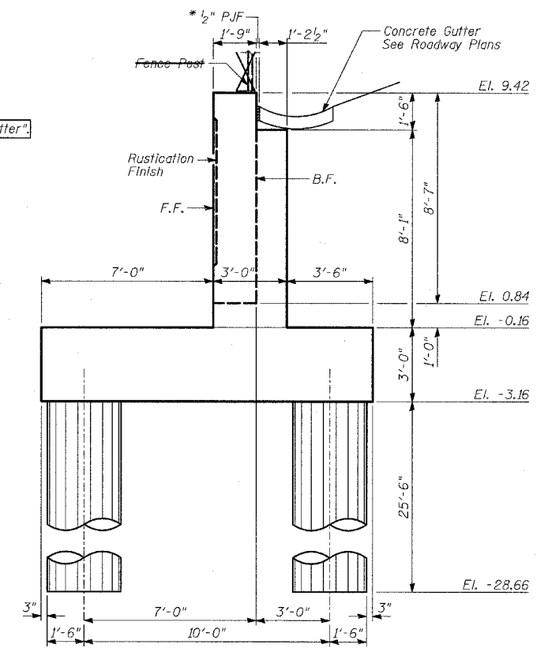

* Cost Included with "Concrete Gutter".

SECTION A-A

LEGEND:

B.F. - denotes Back Face.
F.F. - denotes Front Face.

NOTES:

See Sheet 12 of 17 for details of rustication finish.

SHEET 9 OF 17

REVISIONS	
NAME	DATE
REVISED	04/15/05

ILLINOIS DEPARTMENT OF TRANSPORTATION

F.A.I. 94 (DAN RYAN EXPRESSWAY)
RETAINING WALL ALONG LAFAYETTE AVE.
AT 97TH ST.
WALL 68
SADDLE SECTION AND DETAILS 1

S.N. 016-W967 — DESIGNED BY: MI, DJR
SCALE: — DRAWN BY: DJR, MI
DATE: MARCH 25, 2005 — CHECKED BY: TD, MI

TYLIN INTERNATIONAL

$FILE$ $TIME$ $DATE$