F.A.I. RTE.	SECTION	COUNTY	TOTAL SHEETS	SHEET NO.
94	*	COOK	907	690
STA.		TO STA.		
FED. ROAD DIST. NO.	ILLINOIS	FED. AID PROJECT		

* 41516.1, 1717 & 1818 R-9

62695

BEAM MOMENT TABLE

		0.4 S1	Pier 1	0.5 S2	Pier 2	0.6 S3
Is	(in^4)	24136	19014	19014	19014	22608
Ic (n)	(in^4)	58926				53691
Ic (3n)	(in^4)	42273				39066
Ss	(in^3)	851	792	792	792	835
Sc (n)	(in^3)	1540				1374
Sc (3n)	(in^3)	1421				1268
Z	(in^3)					
℄	(k/')	0.90	1.44	1.44	1.44	0.90
M℄	('k)	1101	-1309	-946	-1203	1010
s℄	(k/')	0.54				0.54
Ms℄	('k)	741				677
M℄	('k)	974	-491	-313	-440	920
M (Imp)	('k)	201	-101	-94	-132	194
$\frac{5}{3}$[M℄+M(Imp)]	('k)	1959	-987	-679	-954	1857
Ma	('k)	4941	-2985	-2113	-2805	4607
Mu	('k)	5905				5254
fs℄(non-comp)	(ksi)	11.2	-19.8	-14.3	-18.2	11.5
fs℄(comp)	(ksi)	6.3				6.4
fs$\frac{5}{3}$(℄+Imp)	(ksi)	15.3	-15.0	-10.3	-14.5	16.2
fs (Overload)	(ksi)	32.7	-34.8	-24.6	-32.7	34.1
fs (Total)	(ksi)		-45.2	-32.0	-42.5	
VR	(k)	54				56

INTERIOR BEAM REACTION TABLE					
		W. Abut.	Pier 1	Pier 2	E. Abut.
R℄	(k)	73	128	119	70
R℄	(k)	42	61	59	42
Imp.	(k)	8	18	18	8
R (Total)	(k)	123	207	196	120

Is and Ss are the moment of inertia and section modulus of the steel section used in computing fs (Total & Overload).

Ic(n) and Sc(n) are the moment of inertia and section modulus of the composite section used in computing stresses due to Live Load.

Ic(3n) and Sc(3n) are the moment of inertia and section modulus of the composite section used in computing stresses due to superimposed dead loads. (see AASHTO 10.38)

VR is the maximum Live Load + Impact shear range in span.

Z is the plastic section modulus used to determine the fully plastic moments in the non-composite areas.

Ma (Applied Moment)=1.3[M℄ + Ms℄ + $\frac{5}{3}$(M℄ + M(Imp))].

The Plastic Moment capacity (Mu) is computed according to AASHTO 10.48.1 and 10.50.1.1.

fs (Overload) is the sum of the stresses due to M℄ + Ms℄ + $\frac{5}{3}$(M℄ + M(Imp)).

fs (Total) (Non-compact section) is the sum of the stresses due to 1.3[M℄ + Ms℄ + $\frac{5}{3}$(M℄ + M(Imp))].

TOP OF WEB ELEVATIONS

(For Fabrication use only)

Girder No.	Brg. W. Abut.	F.S. 1	℄ Pier 1	℄ Pier 2	F.S. 2	Brg. E. Abut.
G1	10.056	12.457	12.540	12.431	12.268	9.751
G2	10.191	12.603	12.686	12.577	12.414	9.907
G3	10.327	12.747	12.831	12.723	12.560	10.063
G4	10.452	12.894	12.977	12.868	12.705	10.220
G5	10.587	13.036	13.123	13.025	12.866	10.376
G6	10.712	13.167	13.258	13.170	13.014	10.532
G7	10.806	13.282	13.373	13.285	13.129	10.657
G8	10.827	13.313	13.404	13.316	13.160	10.699
G9	10.702	13.195	13.290	13.212	13.059	10.595
G10	10.556	13.058	13.154	13.077	12.925	10.470
G11	10.400	12.912	13.008	12.931	12.779	10.334
G12	10.244	12.764	12.863	12.795	12.646	10.209

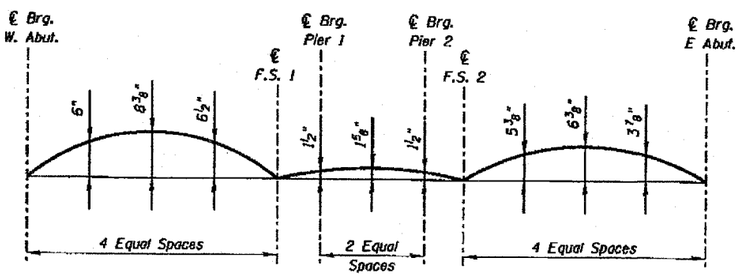

CAMBER DIAGRAM

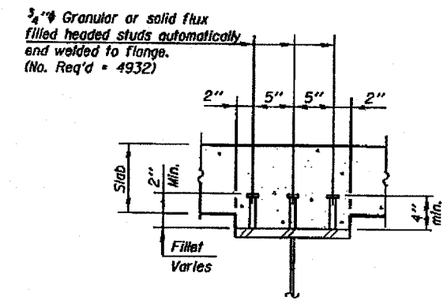

SHEAR CONNECTORS DETAIL

NOTES:

All girders and splice plate material shall be AASHTO M 270 Grade 50.

Work this DWG. with DWGS. S-19 & S-21.

BILL OF MATERIAL

Item	Unit	Quantity
Furnishing And Erecting Structural Steel	Pound	711,168
Stud Shear Connectors	Each	4932

DWG. S-20 of 42

REVISIONS	
NAME	DATE
REVISED	05/06/05

ILLINOIS DEPARTMENT OF TRANSPORTATION
STEEL BEAM DETAILS
76TH STREET OVER FAI-94
FAP ROUTE 1541 SECTION 1818 R-9
COOK COUNTY
STATION 73+49.33
STRUCTURE NUMBER 016-2850

SCALE: NONE DESIGNED BY: TB DRAWN BY: TL
DATE: March 25, 2005 CHECKED BY: WPM CHECKED BY: WPM

KNIGHT
Engineers & Architects

FILE: L:\6592.02\Cad\Sheets\Roadway Structures\Bridge\6592-52850-BM02.dgn