F.A.I. RTE.	SECTION	COUNTY	TOTAL SHEETS	SHEET NO.
94	*	COOK	907	701
STA.		TO STA.		
FED. ROAD DIST. NO.	ILLINOIS	FED. AID PROJECT		

* (1516.1, 1717 & 1818) R-9

62695

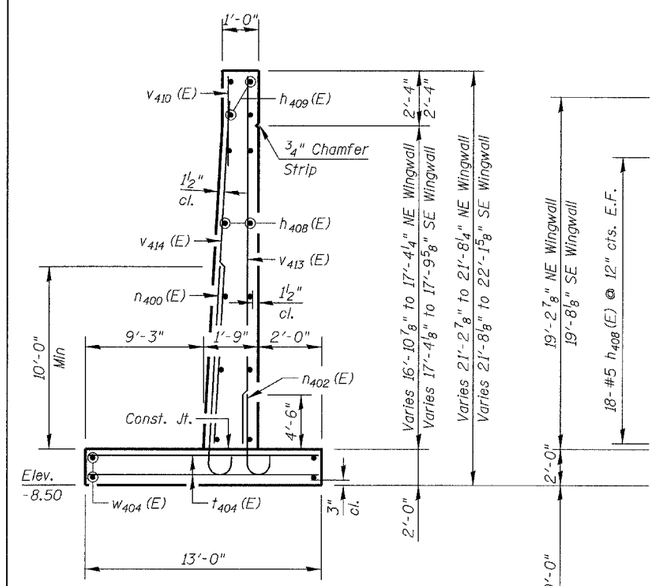

SECTION A-A

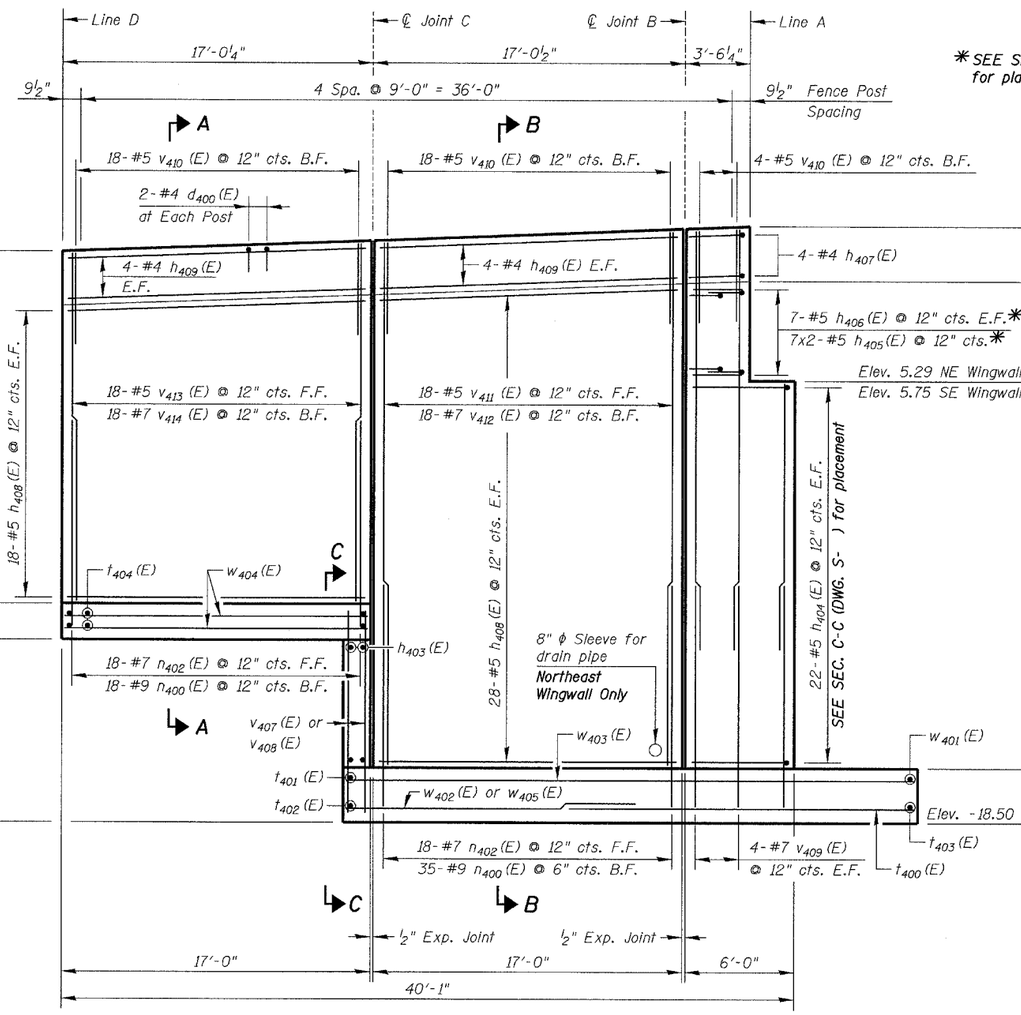

*SEE SECTION B-B from DWG. S-30 for placement of these bars

ELEVATION - NORTHEAST WINGWALL

Southeast Wingwall Similar

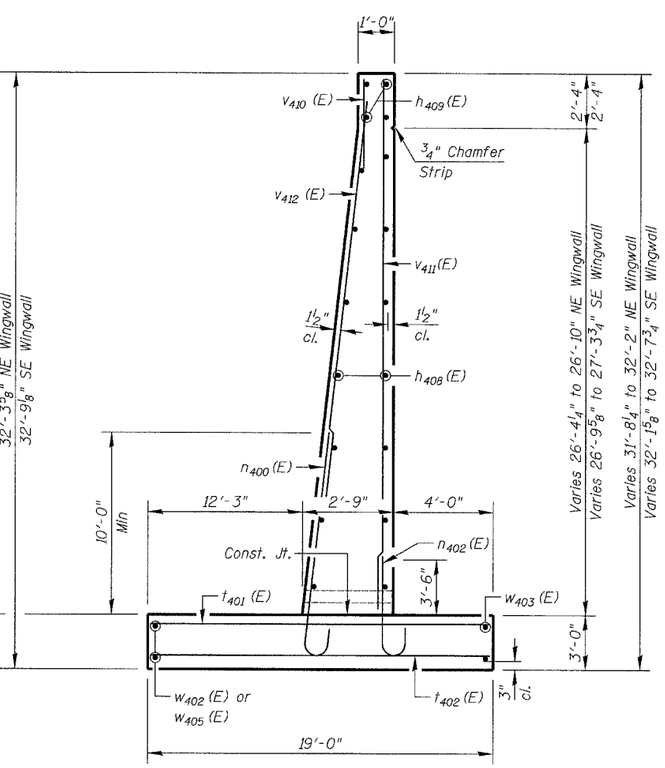

SECTION B-B

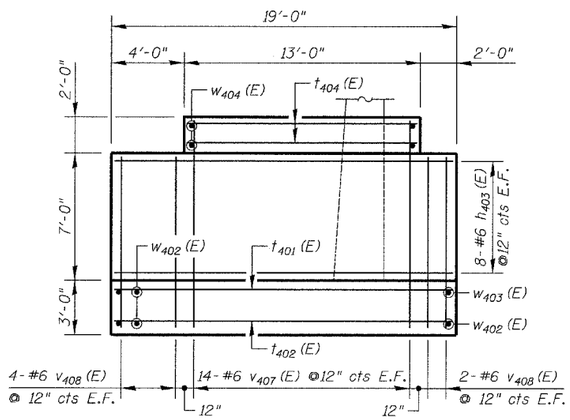

SECTION C-C

TOP/ PARAPET ELEVATIONS

Location	Northeast Wingwall	Southeast Wingwall
Line A	13.80	14.26
℄ Joint B	13.67	14.15
℄ Joint C	13.19	13.64
Line D	12.74	13.18

DWG. S-31 of 42

Legend

E.F. = Each Face
F.F. = Front Face
B.F. = Back Face

Min. Bar Laps:

Vert./Horiz. Bars	Horiz. Top Bars
#5 = 1'-8"	#5 = 2'-5"
#6 = 2'-0"	#6 = 2'-10"
#7 = 2'-9"	

Notes:

Reinforcement Bars designated (E) shall be epoxy coated.

Cost of drain pipe sleeve included with "Concrete Structure".

Estimated Soil Bearing Pressure = 5 ksf.

Work this DWG. with DWGS. S-28 thru S-30 & S-32.

REVISIONS	
NAME	DATE
REVISED	04/15/05

ILLINOIS DEPARTMENT OF TRANSPORTATION

EAST ABUTMENT WINGWALLS

76TH STREET OVER FAI-94

FAP ROUTE 1541 SECTION 1818 R-9

COOK COUNTY

STATION 73+49.33

STRUCTURE NUMBER 016-2850

SCALE: NONE DESIGNED BY: TB DRAWN BY: TL

DATE: March 25, 2005 CHECKED BY: WPM CHECKED BY: WPM

KNIGHT Engineers & Architects

FILE: L:\6592.02\Cad\Sheets\Revised 178\04-15-05\6592-S2850-ABED4 Rev041505.dgn