STATE OF ILLINOIS
DEPARTMENT OF TRANSPORTATION

ROUTE NO.	SECTION	COUNTY	TOTAL SHEETS	SHEET NO.
I-39		WINNEBAGO		13
FED. ROAD DIST. NO. 7		ILLINOIS	FED. AID PROJECT-	

SHEET NO. 7
7 SHEETS

CONTRACT NO. 64A86

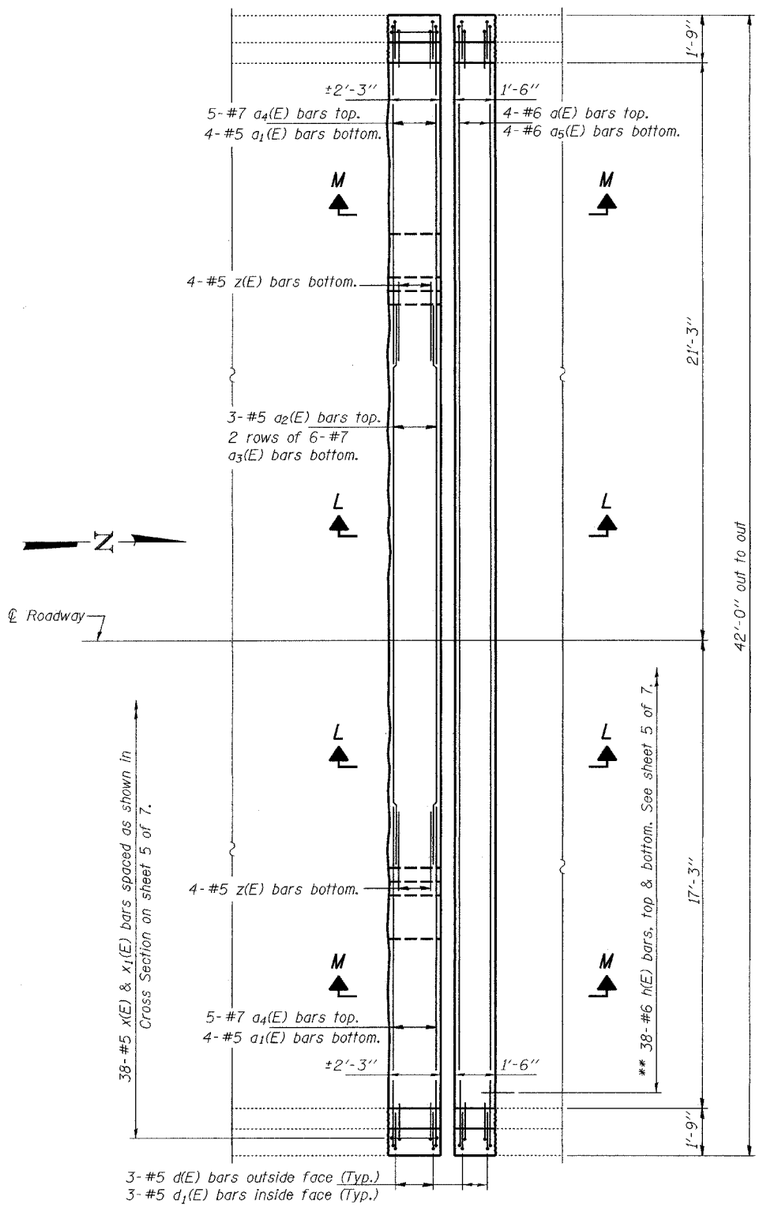

PLAN AT NORTH ABUTMENT

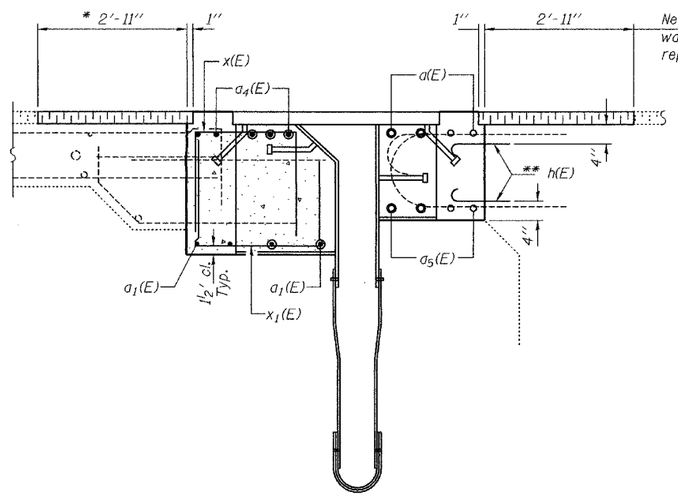

SECTION M-M

New bituminous surface & waterproofing membrane repair. Typ.

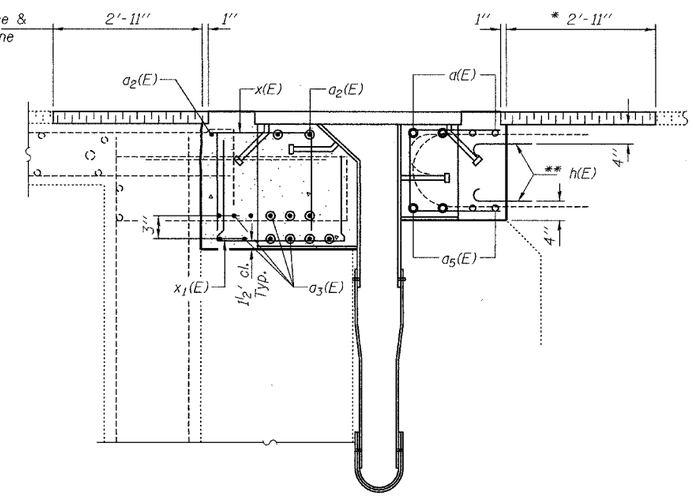

SECTION L-L

** Epoxy grout h(E) bars in 9" min. holes according to Article 584 of the Standard Specifications.
Cost Included with Reinforcement Bars, Epoxy Coated

* Waterproofing membrane system in this area shall not be damaged in order to provide a suitable lap for the new waterproofing membrane.

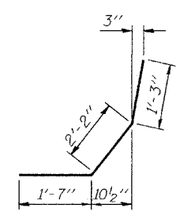

BAR d1(E)

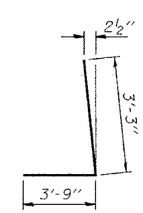

BAR d(E)

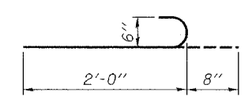

BAR h(E)

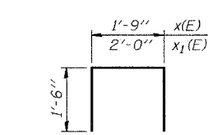

BARS x(E) & x1(E)

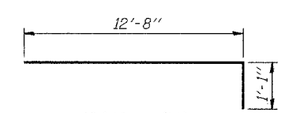

BAR a4(E)

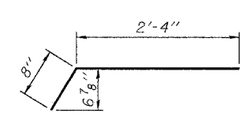

BAR z(E)

BILL OF MATERIAL

Bar	No.	Size	Length	Shape
a(E)	8	#6	41'-8"	
a1(E)	16	#5	7'-0"	
a2(E)	6	#5	19'-9"	
a3(E)	24	#7	21'-0"	
a4(E)	20	#7	13'-9"	
a5(E)	8	#6	38'-9"	
d(E)	24	#5	7'-0"	
d1(E)	24	#5	5'-0"	
h(E)	114	#6	2'-8"	
x(E)	76	#5	4'-9"	
x1(E)	76	#5	5'-0"	
z(E)	16	#5	3'-0"	
Concrete Removal			Cu. Yd.	20.9
Concrete Superstructure			Cu. Yd.	20.9
Reinforcement Bars, Epoxy Coated			Pound	4370

Reinforcement bars designated (E) shall be epoxy coated.

DESIGNED	DAB
CHECKED	PSJ
DRAWN	baliva
CHECKED	DAB PSJ

MARCH 7, 2005
EXAMINED John A. Morris
ENGINEER OF STRUCTURAL SERVICES
PASSED Ralph E. Anderson
ENGINEER OF BRIDGES AND STRUCTURES

BRIDGE REPAIRS
I-39 OVER KISHWAUKEE RIVER
WINNEBAGO COUNTY
STA. 2425+00
SN 101-0133(SB)

...\version 7 files\1010133.dgn 3/7/2005 10:21:16 AM