STATE OF ILLINOIS
DEPARTMENT OF TRANSPORTATION

ROUTE No.	SECTION	COUNTY	TOTAL SHEETS	SHEET NO.
FAI 74	*	TAZEWELL	1366	1312
STA.		TO STA.		
F.H.W.A. REGION		ILLINOIS	PROJECT	

* (90-11)R-2;90(13, 14, 14-1)R-1

CONTRACT NO. 68201

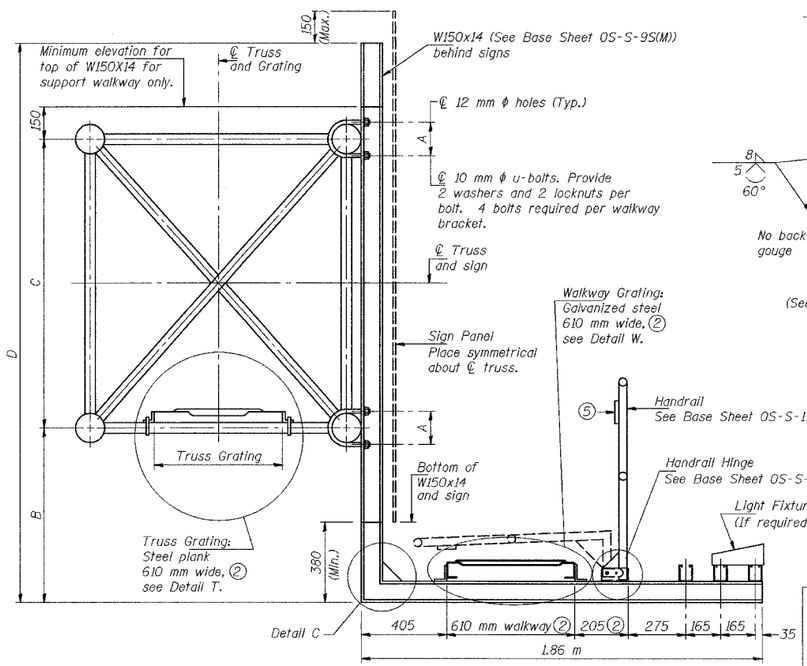

SECTION B-B

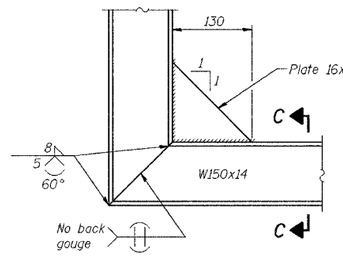

DETAIL C

(See Detail P. on Base Sheet OS-S-11(M).)

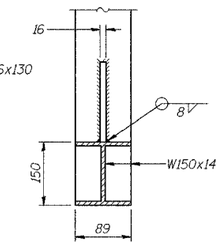

SECTION C-C

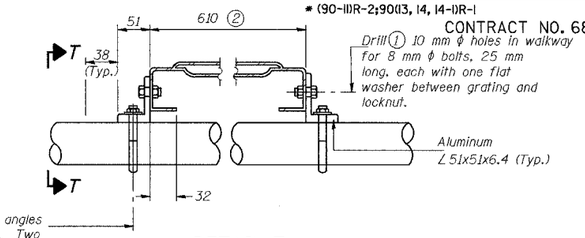

DETAIL T

(Truss grating at horizontal)

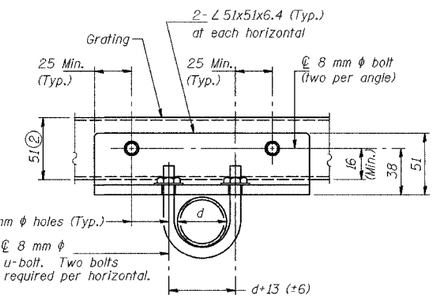

SECTION T-T

(Truss Grating Continuous)

d = outside diameter of horizontal

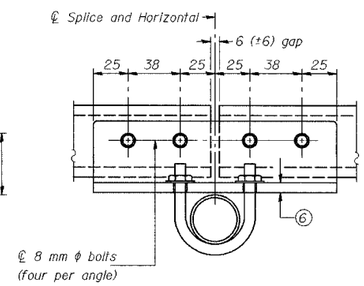

SECTION T-T

(Truss Grating Splice)

Details not shown same as Section T-T. Alternate splice details and locations may be used subject to the Engineer's review and approval.

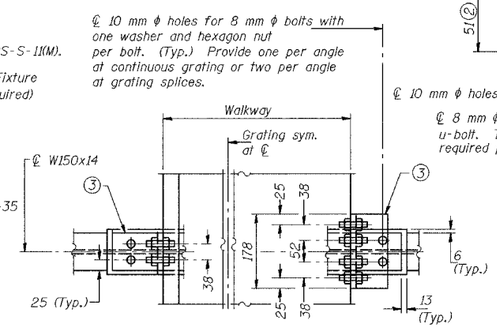

WALKWAY GRATING CONTINUOUS AT WALKWAY GRATING SPLICE

SECTION W-W

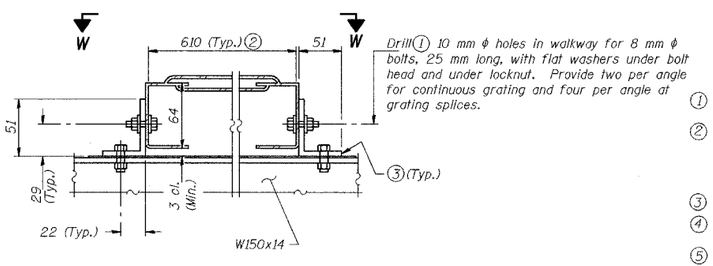

DETAIL W

GALVANIZED STEEL WALKWAY GRATING

① Drilling holes in grating may be done in shop or field, based on Contractor's preference and subject to accurate alignment.

② Perforated or expanded metal grating providing a skid resistant (non-serrated) surface and capable of supporting a 2.22 kN concentrated load with a 1.83 m clear span. Walkway and truss grating dimensions are nominal and may vary (width ±13 mm, depth ±13 mm) based on available standard sizes. Cut ends of grating shall be free of burrs or hazardous projections and coated with zinc-rich primer or equivalent.

③ Galvanized steel ∠ 51x51x6.4, 90 mm long with continuous grating, 190 mm long at grating splice.

④ Details shown are considered equal alternatives to the Steel Walkway on Base Sheet OS-S-10(M) and may be substituted by Contractor at no change in contract cost.

⑤ ℄ 3 mm x 13 mm x 50 mm welded to handrail posts to protect locations that contact grating.

⑥ Tube to grating gap may vary from 0 to 13 (Max.) to align walkway, allow for camber, etc.

STEEL TRUSS GRATING

Structure Number	Station	A (m)	B (m)	C (m)	D (m)
4S090107 4L095.3	153+410	0.153	1.296	1.370	3.812

SIGNING SHEET 61 OF 74

OVERHEAD SIGN STRUCTURES
ALTERNATE STEEL WALKWAY DETAILS

ILLINOIS DEPARTMENT OF TRANSPORTATION

SIGNING PLAN
W.B. I-74 STA. 153+410, S.N. 4S090107 4L095.3

TAZEWELL CO., IL.

DATE: 12-20-04

DESIGNED	RJW
CHECKED	KJN
DRAWN	RJW
CHECKED	KJN

2004
EXAMINED
ENGINEER OF STRUCTURAL SERVICES
PASSED
ENGINEER OF BRIDGES AND STRUCTURES

NUMBER	REVISION	DATE

Walkway Grating, Walkway Supports, Handrail and Lighting are not included. Information shown on this sheet shall be used for Truss Grating and Sign Brackets only.

OS-S-10S(M) 10/1/2001

W:/Proj3573/Sign Structures/Contract 11/sp110-7Aoh-stl.dgn