3/30/2005

F.A.P RTE.	SECTION	COUNTY	TOTAL SHEETS	SHEET NO.
323	143I-1	DOUGLAS	67	11
STA. 22+00	TO STA. 37+00			
FED. ROAD DIST. NO.	ILLINOIS	FED. AID PROJECT		

CONTRACT NO. 70466

1"=50'

0' 10' 20' 30' 40' 50' 100' 150'

SEC. 36, T.16N., R.6E., 3rd P.M.
PIATT COUNTY

SEC. 31, T.16N., R.7E., 3rd P.M.
DOUGLAS COUNTY

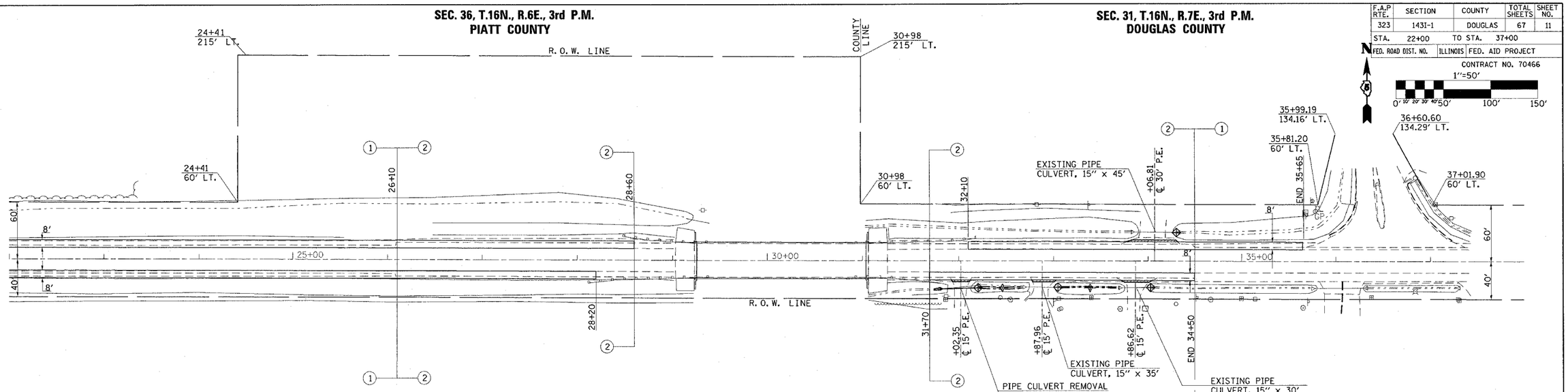

NOTE: THE INTENT OF THIS PROJECT IS TO PLACE 8 FOOT SHOULDERS WITHOUT REMOVING THE GUARDRAIL AT S.N. 021-0051. FIELD CONDITIONS WILL DETERMINE THE EXACT STATION FOR THE SHOULDER TERMINUS ON BOTH SIDES OF THE STRUCTURE. THE SHOULDER TERMINUS WILL BE DETERMINED BY THE ENGINEER.

SEC. 6, T.15N., R.7E., 3rd P.M.
DOUGLAS COUNTY

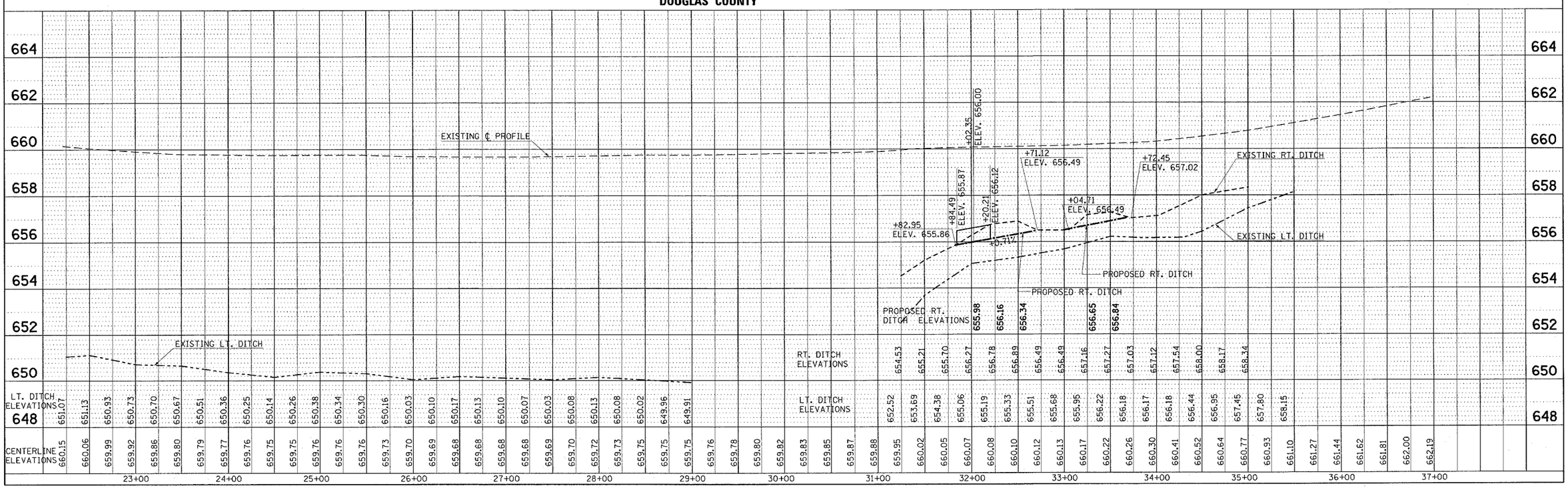

PLAN			BY	DATE
NOTE BOOK NO.	SURVEYED			
	PLOTTED			
	ALIGNMENT CHECKED			
	DTM CHECKED			
	CADD FILE NAME			

PROFILE			BY	DATE
NOTE BOOK NO.	SURVEYED			
	PLOTTED			
	GRADES CHECKED			
	B.M. NOTED			
	STRUCTURE NOTATIONS CHKD			

c:\projects\d501405 (v8)\pp50.dgn