F.A.P. RTE.	SECTION	COUNTY	TOTAL SHEETS	SHEET NO.
321	18N	PIKE	26	4
STA.		TO STA.		
FED. ROAD DIST. NO.	ILLINOIS	FED. AID PROJECT		

STATE CONTRACT NO. 72691

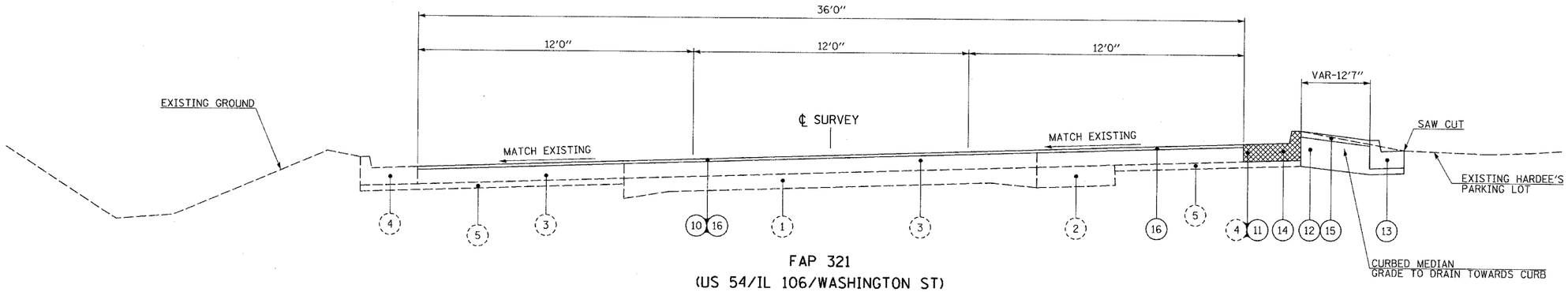

FAP 321
(US 54/IL 106/WASHINGTON ST)

STA 58+14.53 TO STA 61+41.68

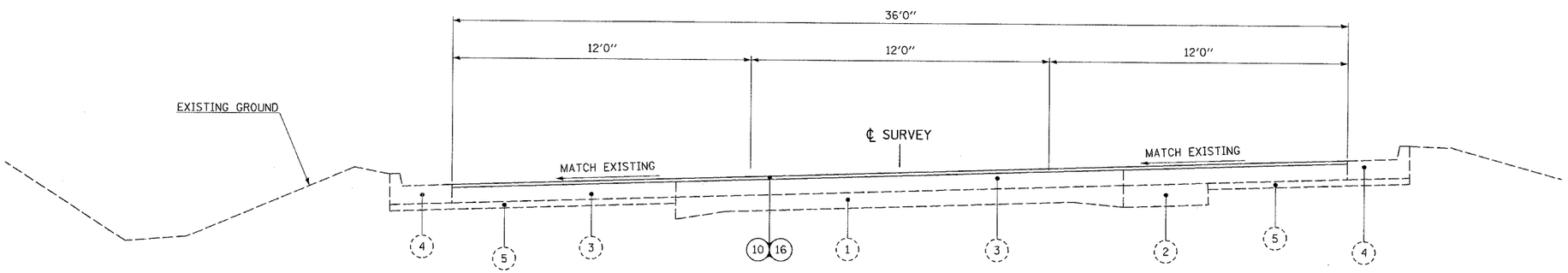

FAP 321
(US 54/IL 106/WASHINGTON ST)

STA 58+00.00 TO STA 58+14.53
STA 61+41.68 TO STA 63+27.30

EXISTING LEGEND

1. EXISTING PORTLAND CEMENT CONCRETE PAVEMENT (9"-7"-9")
2. EXISTING PORTLAND CEMENT CONCRETE BASE COURSE WIDENING
3. EXISTING BITUMINOUS BASE COURSE
4. EXISTING COMBINATION CURB & GUTTER, TYPE B-6.24
5. EXISTING AGGREGATE BASE COURSE

PROPOSED LEGEND

10. PROPOSED BITUMINOUS SURFACE REMOVAL 1 ½"
11. PROPOSED COMBINATION CURB & GUTTER REMOVAL
12. PROPOSED SUB-BASE GRANULAR MATERIAL, TYPE A
13. PROPOSED COMBINATION CONCRETE CURB & GUTTER, TYPE B-6.12
14. PROPOSED COMBINATION CONCRETE CURB & GUTTER, TYPE B-6.24
15. PROPOSED CONCRETE MEDIAN SURFACE, 4 INCH
16. PROPOSED BITUMINOUS CONCRETE SURFACE COURSE, SUPERPAVE, MIX "D", N70 1 ½"

REVISIONS	
NAME	DATE

ILLINOIS DEPARTMENT OF TRANSPORTATION

TYPICAL SECTIONS
FAP ROUTE 321

SCALE: NONE
DATE 12/16/03

DRAWN BY AJP
CHECKED BY SRD

Plot Date: 9/29/2004
Plot Time: 1:55:23 PM
Plotted By: sdomahua
Pen Table: idot.tbl
Filename: I:\0025\work_order_12_construction_plans\04-05_typicals.dgn