STATE OF ILLINOIS
DEPARTMENT OF TRANSPORTATION

ROUTE NO.	SECTION	COUNTY	TOTAL SHEETS	SHEET NO.
F.A.I. 55	D-6 ITS #1	SANGAMON		48
FED. ROAD DIST. NO. 7	ILLINOIS	FED. AID PROJECT-		

SHEET NO. -
- SHEETS

Contract #

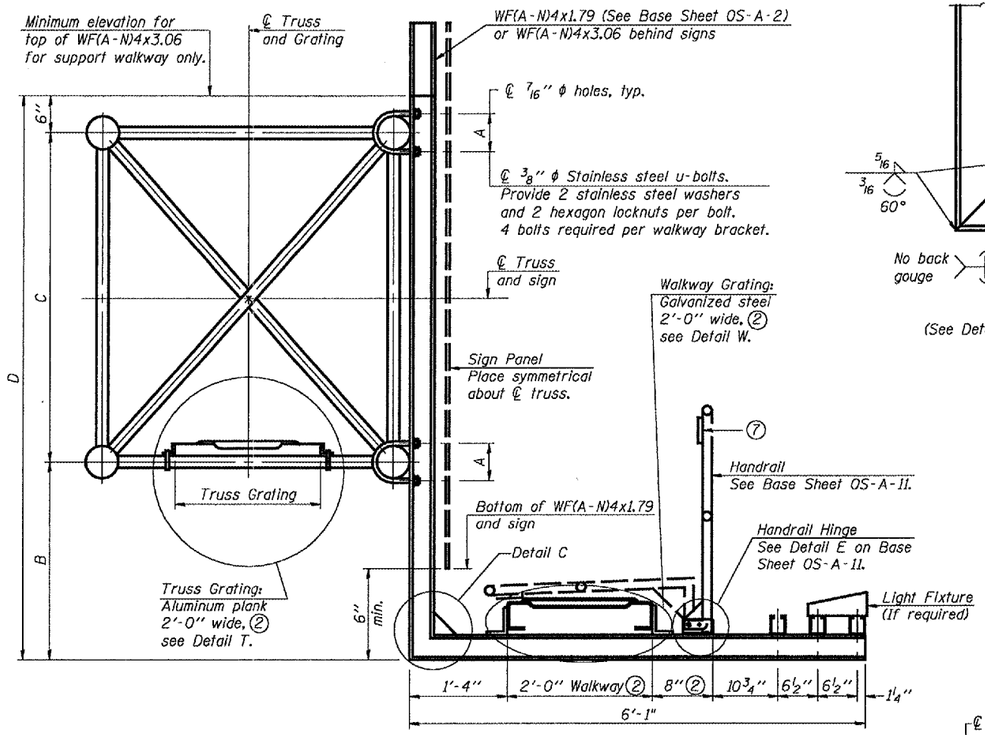

SECTION B-B

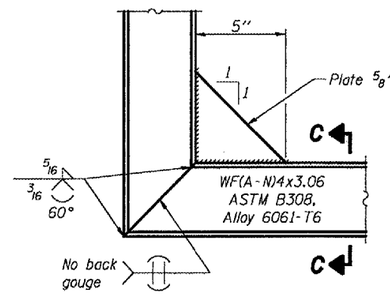

DETAIL C
(See Detail P, on Base Sheet OS-A-11.)

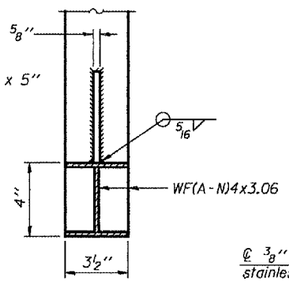

SECTION C-C

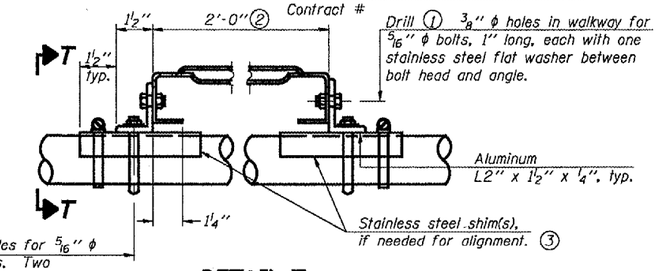

DETAIL T
(Truss grating at horizontal)

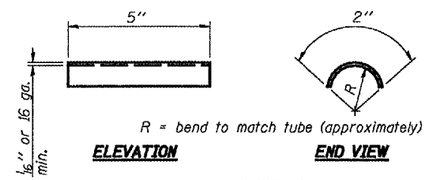

SHIM DETAIL

℄ 3/8" ϕ holes for 5/16" ϕ steel bolts with two stainless steel washer and hexagon nut per bolt, typ. Provide one per angle at continuous grating or two per angle at grating splices.

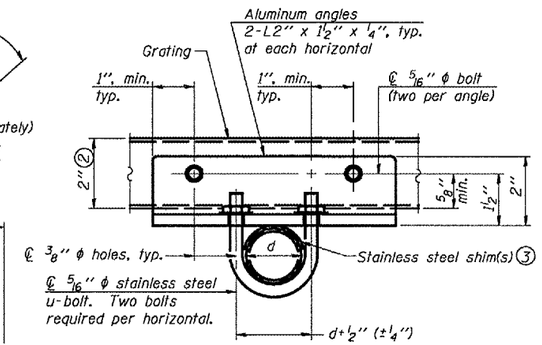

SECTION T-T
(Truss Grating Continuous)

d = outside diameter of horizontal

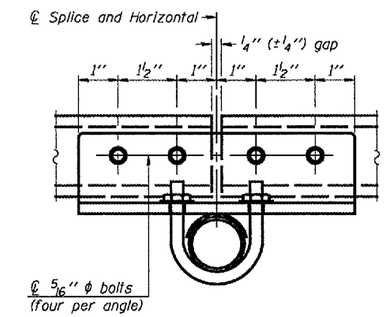

SECTION T-T
(Truss Grating Splice)
Details not shown same as Section T-T.
Alternate splice details and locations may be used subject to the Engineer's review and approval.

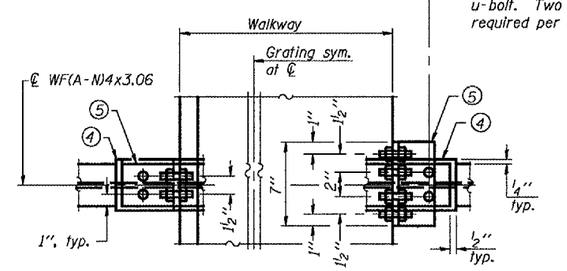

WALKWAY GRATING CONTINUOUS AT WALKWAY GRATING SPLICE

SECTION W-W

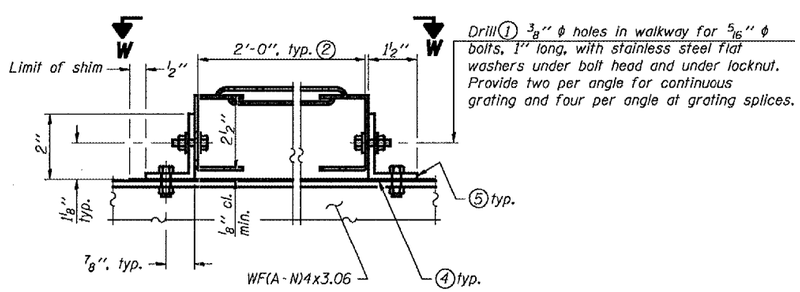

DETAIL W
GALVANIZED STEEL WALKWAY GRATING

ALUMINUM TRUSS GRATING

Structure Number	Station	A	B	C	D
6S084I055R86.9	234+00.00	7 7/16"	1'-3"	7'-0"	8'-9"
6S084I055L107.0	202+54.00	7 7/16"	1'-3"	7'-0"	8'-9"

(1) Drilling holes in grating may be done in shop or field, based on Contractor's preference and subject to accurate alignment.

(2) Perforated or expanded metal grating providing a skid resistant (non-serrated) surface and capable of supporting a 500 pound concentrated load with a 6'-0" clear span. Walkway and truss grating dimensions are nominal and may vary (width ±1/2", depth ±1/2") based on available standard sizes. Cut ends of grating shall be free of burrs or hazardous projections and coated with zinc-rich primer or equivalent.

(3) Stainless steel shims shall be placed under angles at horizontals and horizontal diagonals if needed to compensate for alignment variations and differences in horizontal diagonal pipe sizes beyond adjustment provided by angles. Secure with one stainless steel clamp per location, see "Shim Detail". Thicker shim plates may be used when needed subject to shims performing properly.

(4) 1/16" (or 16 ga.) x 2 1/2" x 4" stainless steel shim adhered to top of WF(A-N)4x3.06 beneath each galvanized angle. Adhesives for shims shall be suitable for materials joined and full exposure conditions.

(5) Galvanized steel L2" x 1 1/2" x 1/4", 3 1/2" long with continuous grating, 7 1/2" long at grating splice.

(6) Details shown are considered equal alternatives to the Aluminum Walkway on Base Sheet OS-A-10 and may be substituted by Contractor at no change in contract cost.

(7) ℙ 1/8" x 1/2" x 2" welded to handrail posts to protect locations that contact grating.

OVERHEAD SIGN STRUCTURES
ALTERNATE WALKWAY DETAILS

F.A.I. 55 (I-55)
SECTION D-6 ITS #1
SANGAMON COUNTY

DESIGNED -	
CHECKED -	
DRAWN -	
CHECKED -	

- 200
EXAMINED
ENGINEER OF BRIDGE DESIGN
PASSED
ENGINEER OF BRIDGES AND STRUCTURES

NUMBER	REVISION	DATE

OS-A-10S 1-7-05