FAP ROUTE	SECTION	COUNTY	TOTAL SHEETS	SHEET NO
600	51RS-3	ST. CLAIR	347	140
STA.		TO STA.		
CONTRACT : 76563				

WHEN "A" IS 150 mm OR LESS, THE TEMPORARY CONCRETE BARRIER SHALL BE ANCHORED TO NEW SLAB ACCORDING TO DETAIL I OR DETAIL II. NO ANCHORAGE REQUIRED WHEN "A" IS GREATER THAN 150 mm.

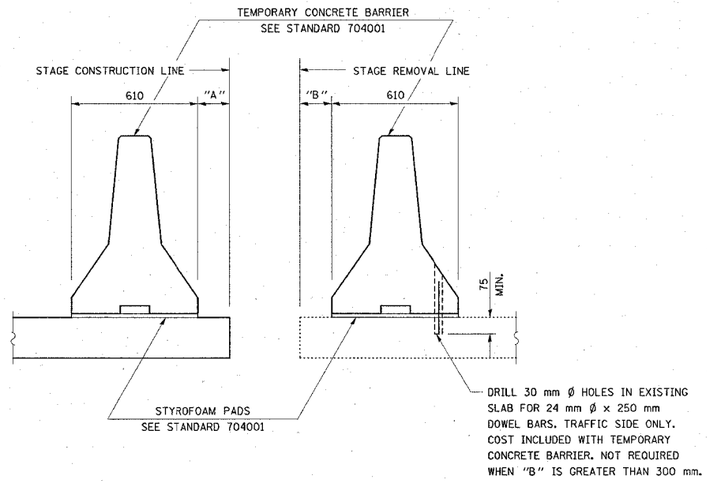

SECTIONS THRU SLAB

NOTES:

DETAIL I - WITH BAR SPLICER OR COUPLERS:
CONNECT ONE (1) 25x180x250 STEEL ℙ TO THE TOP LAYER OF COUPLERS WITH 2-16 mm Ø BOLTS SCREWED TO COUPLER AT APPROXIMATE ℄ OF EACH 3 m BARRIER PANEL.

DETAIL II - WITH EXTENDED REINFORCEMENT BARS:
CONNECT ONE (1) 25x180x250 STEEL ℙ TO THE CONCRETE SLAB WITH 2-16 mm Ø EXPANSION ANCHORS OR CAST IN PLACE INSERTS SPACED BETWEEN THE TOP LAYER OF REINFORCEMENT AT APPROXIMATE ℄ OF EACH 3 m BARRIER PANEL.

COST OF ANCHORAGE INCLUDED WITH TEMPORARY CONCRETE BARRIER.
ALL DIMENSIONS ARE IN MILLIMETERS (mm) EXCEPT AS NOTED.

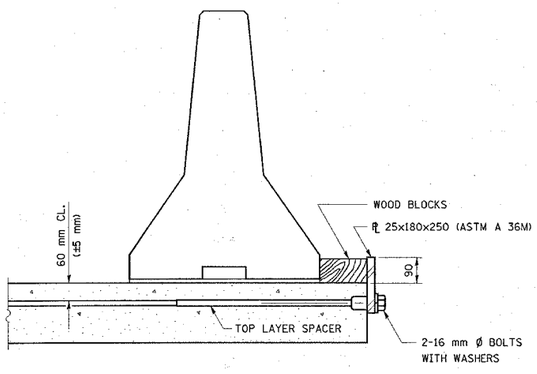

DETAIL I

THE 25x180x250 PLATE SHALL NOT BE REMOVED UNTIL STAGE II CONSTRUCTION FORMS AND REINFORCEMENT BARS ARE IN PLACE.

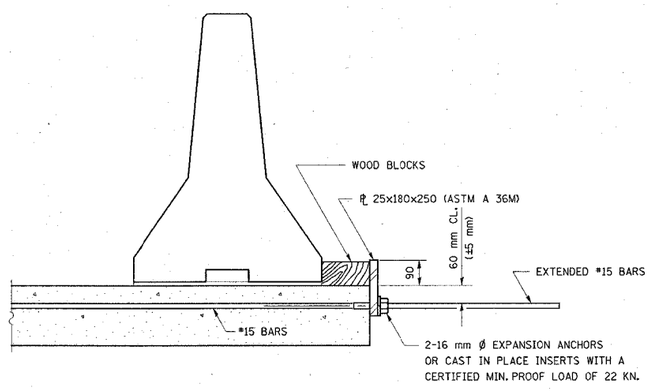

DETAIL II

THE 25x180x250 PLATE SHALL NOT BE REMOVED UNTIL STAGE II CONSTRUCTION FORMS AND ALL REINFORCEMENT BARS ARE IN PLACE AND THE CONCRETE IS READY TO BE PLACED.

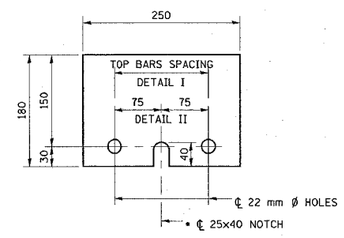

ℙ 25x180x250

• REQUIRED ONLY WITH DETAIL II

R-27 (M) 4-30-99

REVISIONS	
NAME	DATE

ILLINOIS DEPARTMENT OF TRANSPORTATION

TEMPORARY CONCRETE BARRIER FOR STAGE CONSTRUCTION

FAP ROUTE 600
SECTION 51RS-3
ST. CLAIR COUNTY

DRAWN BY:

PLOT DATE: Tuesday March 29, 2005 @ 3:09:50 PM

PLAN | SURVEYED | PLOTTED | ALIGNMENT CHECKED | GRADES CALC'D | CADD FILE CHECKED | NOTE BOOK NO. | CADD FILE NAME | BY | DATE

3/29/2005
Tuesday March 29, 2005 @ 3:09:50 PM
c:\projects\ved\53075\plan\bepir0848.dgn LV:1-53