ROUTE NO.	SECTION	COUNTY	TOTAL SHEETS	SHEET NO.
F.A.U. 5100	*	WINNEBAGO	17	11
FED. ROAD DIST. NO. 7	ILLINOIS	FED. AID PROJECT BHM-5899(63)		

* 04-00526-00-BR

SHEET NO. 2
4 SHEETS

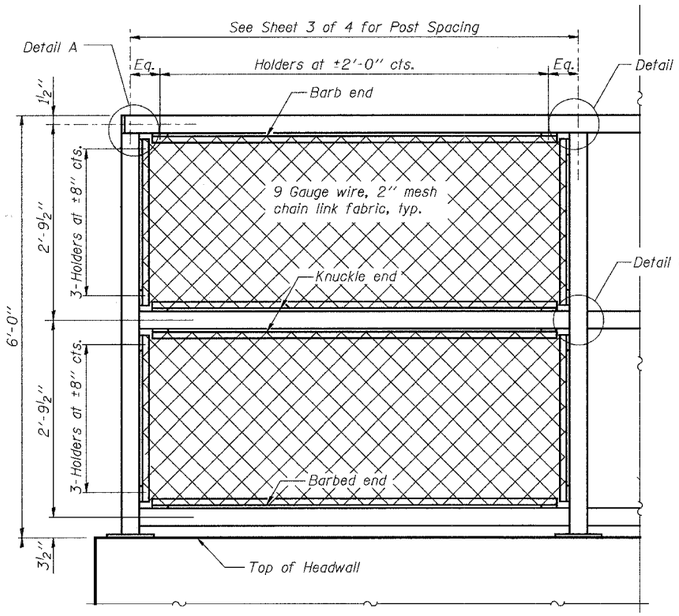

ELEVATION ON HEADWALL

(Inside Face)

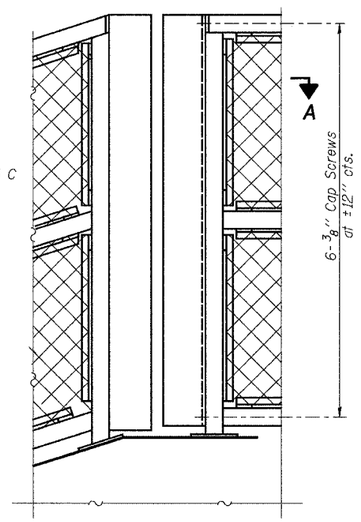

ELEVATION AT CORNER

(Inside Face)
(Showing NE Corner, SE Corner Similar)

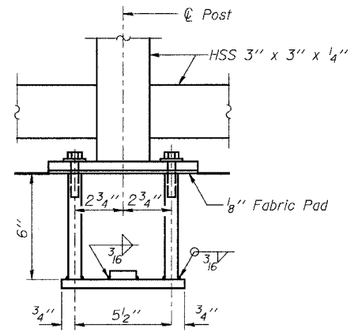

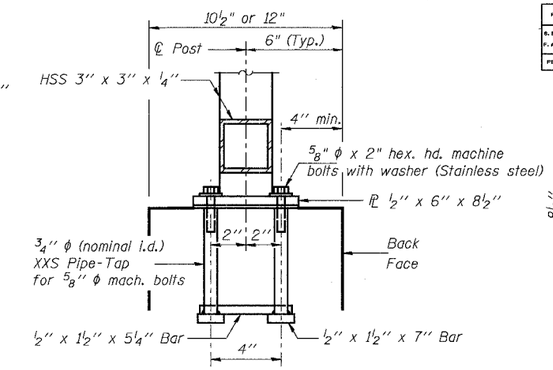

ANCHOR BOLT DETAILS

In lieu of the cast-in-place anchor device shown, the Contractor has the option of drilling and epoxy grouting ⅝" ϕ anchor rods. Embedment shall be according to the manufacturer's specifications.

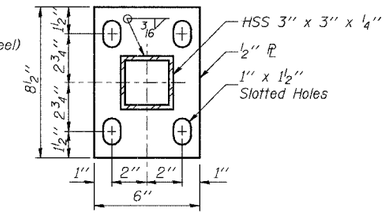

BASE PL

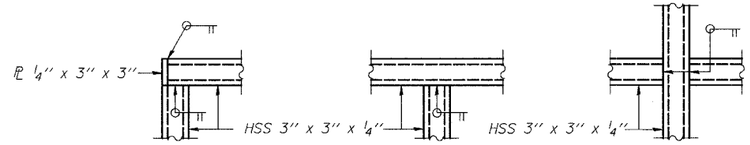

DETAIL A DETAIL B DETAIL C

The above "Anchor Bolts Details", "Detail A", "Detail B", and "Detail C" correctly shown the orientation of the rail and post elements for the portion of the rail located on the headwall (i.e. where the posts and rails are perpendicular to each other) These details shall similarly apply to the railing on the wingwalls where the rails are sloped relative to the posts.

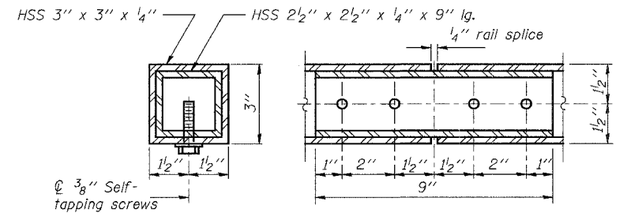

RAIL SPLICE

NOTES

Railing shall be according to Section 509 of the Standard Specifications, except as noted, and will be paid for at the Contract Unit Price per foot for Bicycle Railing.

The 9 gauge fabric ties shall be according to Article 1006.27 (d) of the Standard Specifications.

Installation of the chain link fabric shall be according to Section 664 of the Standard Specifications.

Hollow structural sections shall conform to the requirements of ASTM designation A 500, Grade B, structural steel tubing.

All other steel shapes and plates shall conform to the requirements of AASHTO M 270 Grade 36.

The chain link fabric shall be placed along Bicycle Side as shown on Section A-A.

Stretcher bars shall be used at all four sides of each panel.

If the option of drilling and epoxy grouting the anchor rods is chosen, the Contractor shall use the capsule or the adhesive cartridge type anchor rods that have been previously tested and given a prior approval by the Department. The Contractor shall install these anchor rods in pre-drilled holes according to the manufacturer's recommendations and procedures. The capsule or the adhesive cartridge shall be sealed with pre-measured amounts of the adhesive chemical.

Space reinforcement to miss anchor rods.

All posts, railing, splices, anchor devices, and bent plates shall be galvanized after shop fabrication according to AASHTO M 111 and ASTM A 385. All bolts, nuts, washers, and anchor rods shall be galvanized according to AASHTO M 232 except stainless steel bolts as noted.

Vent holes for galvanizing shall be placed in the posts and rails at locations that will not allow the accumulation of moisture in the members.

The chain link fabric shall conform to the requirements of Article 1006.27(a)(1)a, b or c of the Standard Specifications.

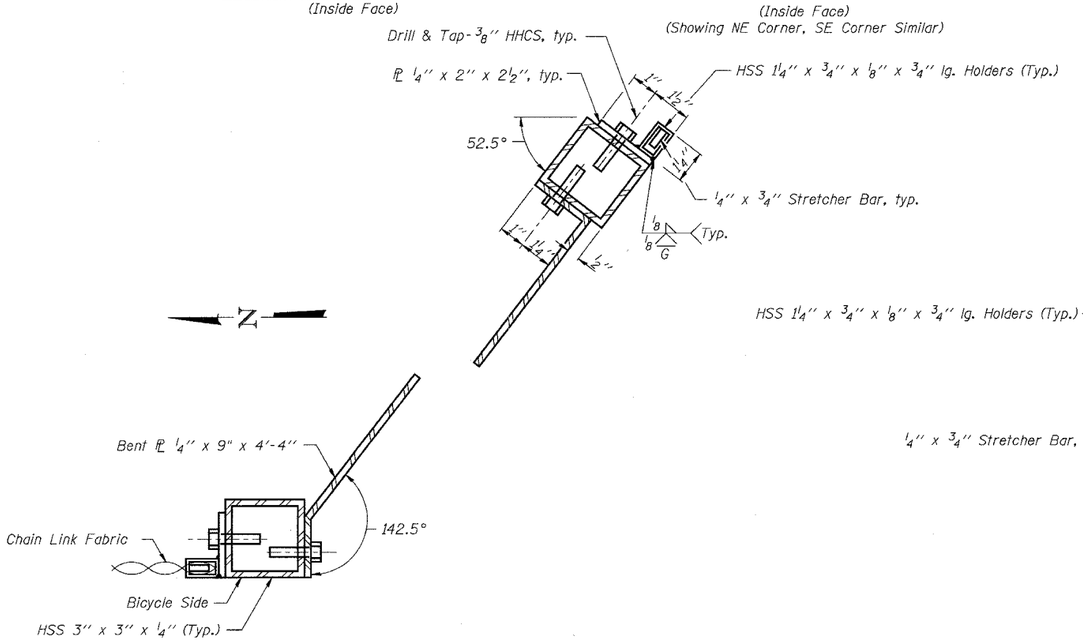

SECTION A-A

(Inside Face Southeast Corner)

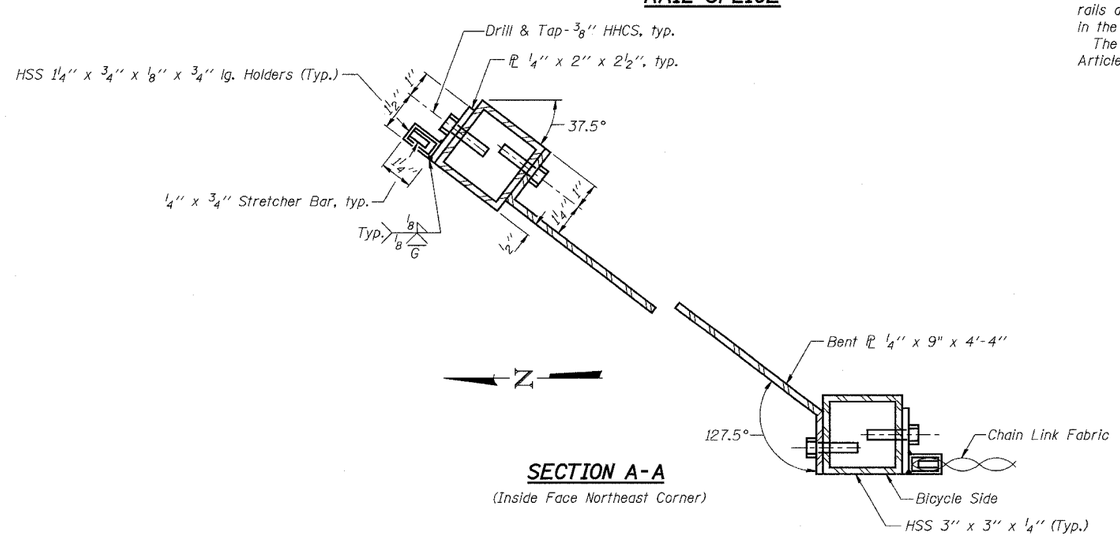

SECTION A-A

(Inside Face Northeast Corner)

BILL OF MATERIAL

Item	Unit	Quantity
Pedestrian Railing	Foot	80

Corporate License Number 184-001-084

PEDESTRIAN RAILING

HORACE AVENUE BRIDGE
OVER SOUTH FORK OF KENT CREEK
F.A.U. ROUTE 5100
SECTION 04-00526-00-BR
WINNEBAGO COUNTY
STRUCTURE NUMBER 101-6107
STATION 12+84.28

© Copyright Hanson Professional Services Inc. 2005

HANSON

JOB NO. 04R1901
DATE 3/22/05

LAYOUT	SWK	02/28/05
DRAWN	UNV AWR	03/25/05
REVIEWED	SLG	03/25/05

024446 PM
03/22/2005
IN:\Projects\WR190\Struct\Sheet\S-01-Rail.dgn