SECTION	97-09110-00-BR	TOTAL SHEETS	SHEET NO.
COUNTY	WAYNE	14	11
ROAD DIST.	GROVER		
STA.	TO STA.		

CONTRACT # 95308

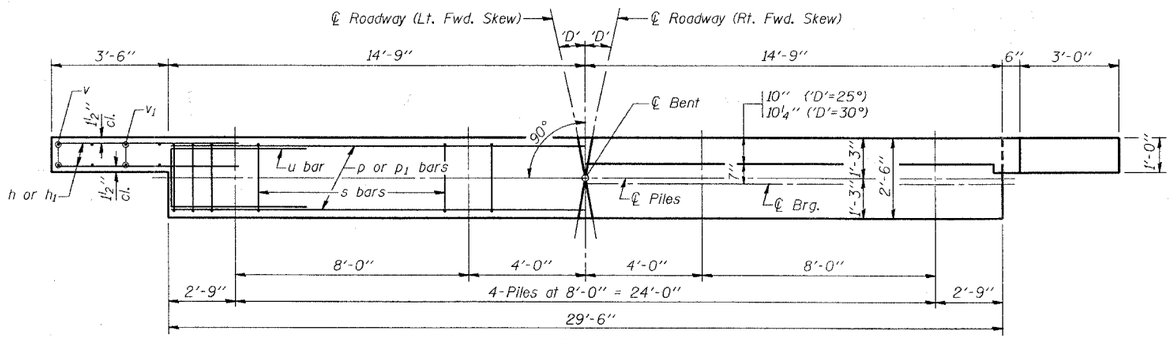

PLAN

('D'=Designated Skew Angle)

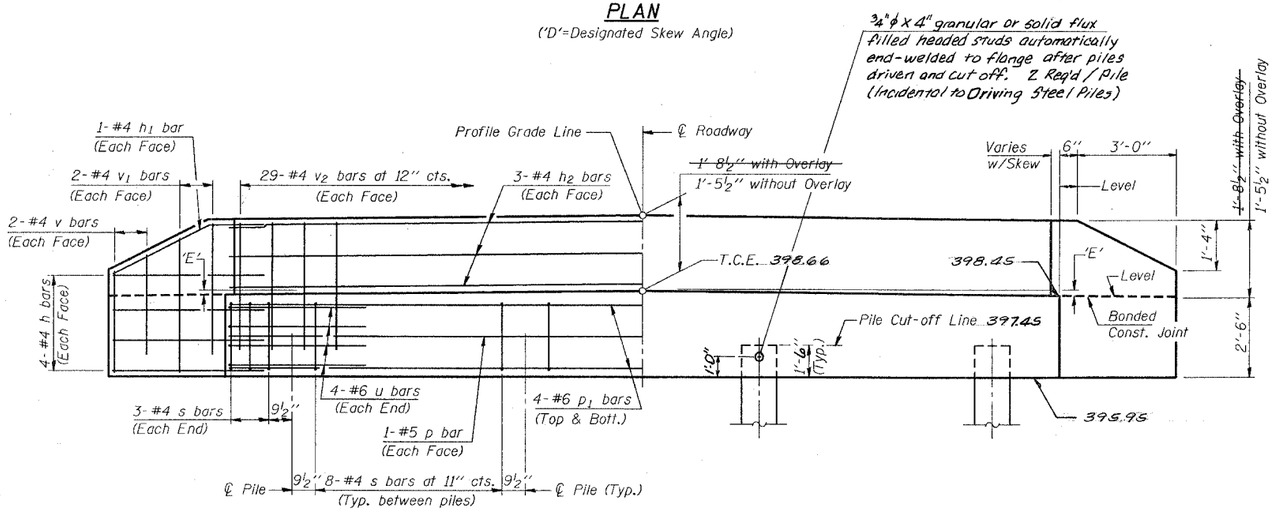

ELEVATION

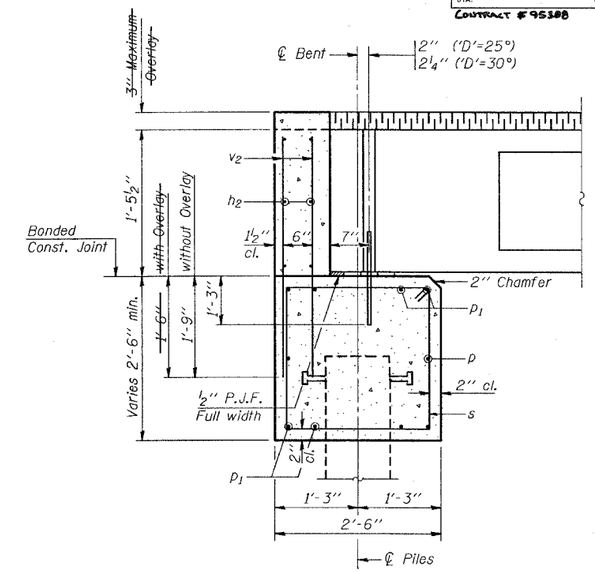

SECTION THRU ABUTMENT

(At Right Angles)

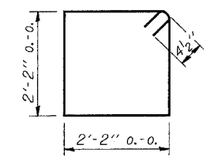

BAR s

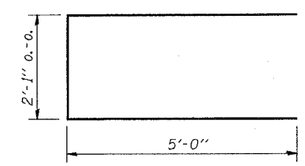

BAR u

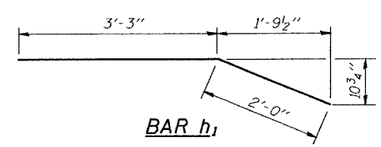

BAR h_1

BILL OF MATERIAL FOR ONE ABUTMENT

Bar	No.	Size	Length	Shape
h	16	#4	5'-0"	
h1	4	#4	5'-3"	
h2	6	#4	29'-2"	
p	2	#5	29'-2"	
p1	8	#6	29'-2"	
s	30	#4	9'-5"	
u	8	#6	12'-1"	
v	8	#4	2'-6"	
v1	8	#4	3'-5"	
v2	58	#4	3'-1"	
Concrete Structures			9.7 Cu. Yds.	
Reinforcement Bars			1080 Lbs.	

DIMENSION 'E'

GRADE	'D'=25°		'D'=30°	
	UPGRADE END	DOWNGRADE END	UPGRADE END	DOWNGRADE END
0%	2½"	2½"	2⅜"	2⅜"
Over 0% to 1%	2⅛"	2⅞"	2"	2⅞"
Over 1% to 2%	1⅜"	3⅝"	1"	3¾"
Over 2% to 3%	⅝"	4⅜"	⅛"	4⅝"
Over 3% to 4%	0"	5⅛"	——	——

NOTES

1. The Backwall and the portion of the Wingwalls above the bonded construction joint shall be cast against the in-place beam.
2. Reinforcement bars shall conform to A.A.S.H.T.O. M-31, M-42 or M-53, Grade 60.

MAXIMUM PILE LOADS

SPAN	TONS
25'	25
30'	26
35'	28
40'	30

DESIGN STRESSES

f'c = 3,500 psi
fy = 60,000 psi

Illinois Department of Transportation

PASSED November 1, 1995
Engineer of Bridge Design

APPROVED November 1, 1995
Engineer of Bridges and Structures

ISSUED 1-1-81

P.P.C. DECK BEAMS
PILE BENT ABUTMENT

24' RDWY. | 17" BMS. | 'D'=25° OR 30°

STANDARD C.H.-2417-30

Wed Feb 5 07:59:51 1997 C:\PLOT\queue\D7C6B401.cef rey /usr/projects/bridge/engabut2.prf