SECTION	COUNTY	TOTAL SHEETS	SHEET NO.
T.R. 54 02-09118-00-BR	FAYETTE	14	9

CONTRACT NO. 95429

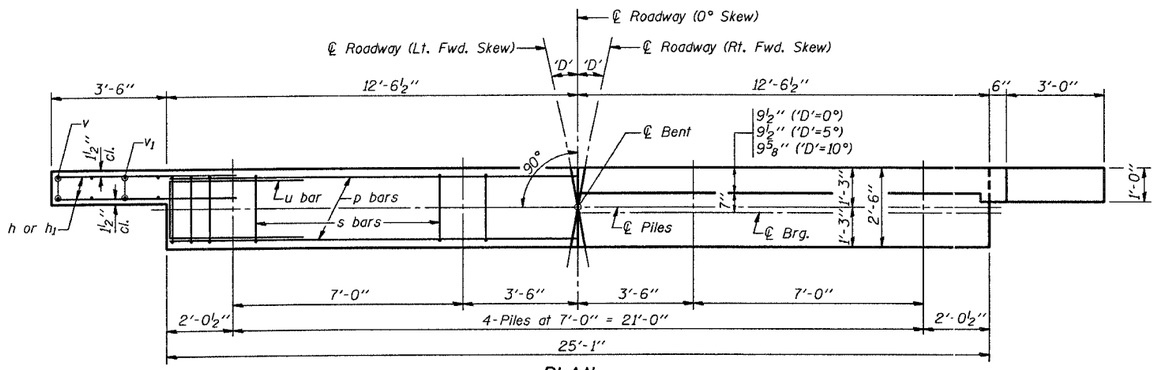

PLAN

('D'=Designated Skew Angle)

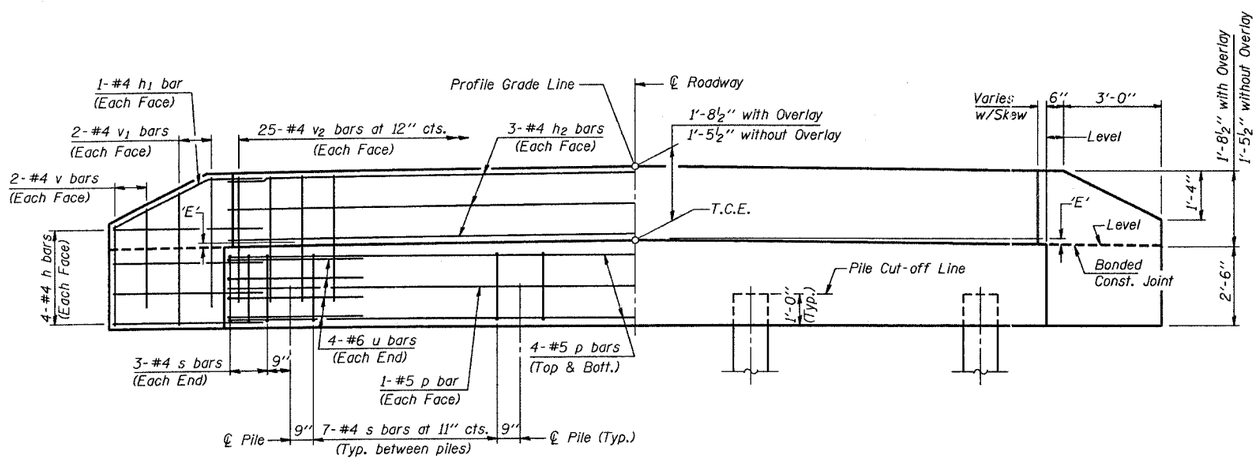

ELEVATION

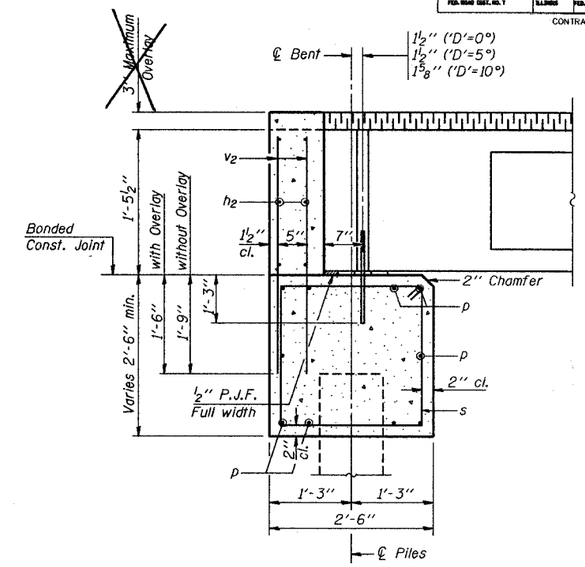

SECTION THRU ABUTMENT

(At Right Angles)

DIMENSION 'E'

GRADE	'D'=0°		'D'=5°		'D'=10°	
	UPGRADE END	DOWNGRADE END	UPGRADE END	DOWNGRADE END	UPGRADE END	DOWNGRADE END
0%	2⅜"	2⅜"	2⅜"	2⅜"	2⅜"	2⅜"
Over 0% to 1%	2⅜"	2⅜"	2¼"	2⅜"	2⅛"	2½"
Over 1% to 2%	2⅜"	2⅜"	2⅛"	2½"	1⅞"	2¾"
Over 2% to 3%	2⅜"	2⅜"	2"	2⅝"	1⅝"	3"
Over 3% to 4%	2⅜"	2⅜"	1⅞"	2¾"	1⅜"	3¼"

NOTES

1. The Backwall and the portion of the Wingwalls above the bonded construction joint shall be cast against the in-place beam.
2. Reinforcement bars shall conform to A.A.S.H.T.O. M-31, M-42 or M-53, Grade 60.

MAXIMUM PILE LOADS

SPAN	TONS
25'	25
30'	26
35'	28
40'	30

DESIGN STRESSES

f'c = 3,500 psi
fy = 60,000 psi

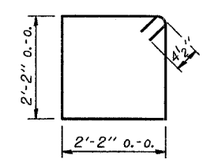

BAR s

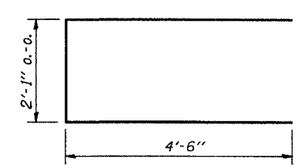

BAR u

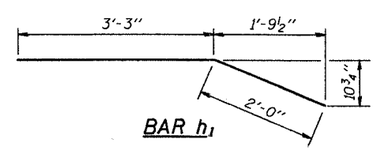

BAR h1

BILL OF MATERIAL FOR ONE ABUTMENT

Bar	No.	Size	Length	Shape
h	16	#4	5'-0"	
h1	4	#4	5'-3"	
h2	6	#4	24'-9"	
p	10	#5	24'-9"	
s	27	#4	9'-5"	
u	8	#6	11'-1"	
v	8	#4	2'-6"	
v1	8	#4	3'-5"	
v2	50	#4	3'-1"	
Concrete Structures			8.3 Cu. Yds.	
Reinforcement Bars			860 Lbs.	

Illinois Department of Transportation

PASSED November 1, 1995
Engineer of Bridge Design

APPROVED November 1, 1995
Engineer of Bridges and Structures

ISSUED 1-96

P.P.C. DECK BEAMS
PILE BENT ABUTMENT

24' RDWY.	17" BMS.	'D'=0°, 5° OR 10°

STANDARD CA-2417-10