FAP ROUTE	SECTION	COUNTY	TOTAL SHEETS	SHEET NO
322	(11-1VB)-1	UNION	39	4
STA.		TO STA.		

CONTRACT NO. 98488

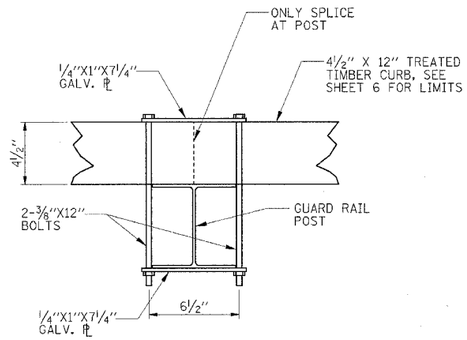

TIMBER CURB DETAIL

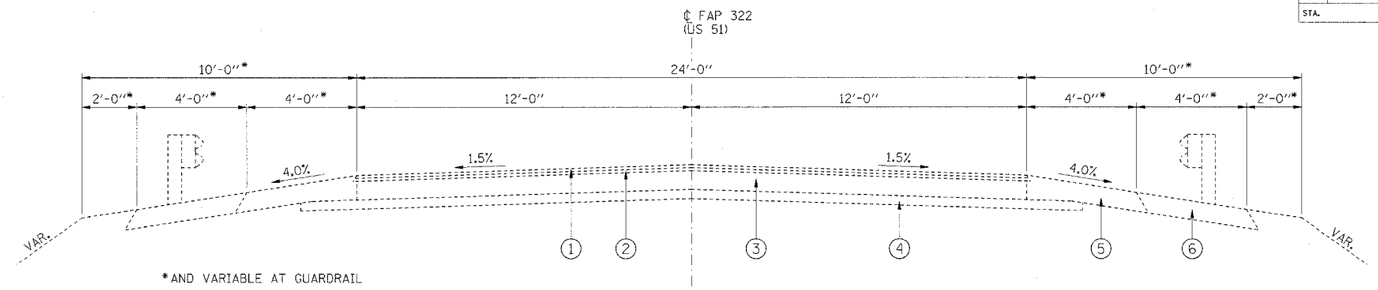

EXISTING TYPICAL SECTION

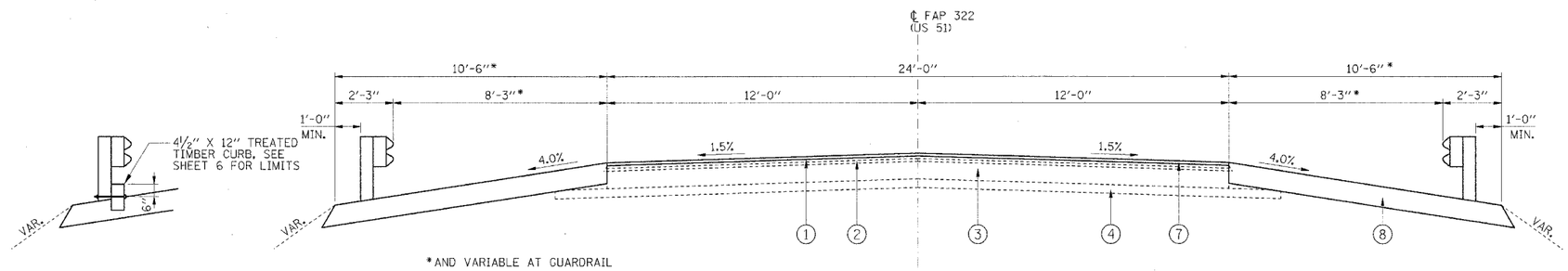

PROPOSED TYPICAL SECTION

STA. 581+50.00 TO STA. 581+75.45
STA. 585+73.95 TO STA. 586+50.00

BRIDGE APPROACH AND CONNECTOR PAVEMENT
STD. 420401 (SPECIAL)
STA. 581+75.45 TO STA. 582+18.70
STA. 585+30.70 TO STA. 585+73.95

BRIDGE STATIONS
STA. 582+18.70 TO STA. 585+30.70

LEGEND

1. EXISTING BITUMINOUS CONCRETE SURFACE COURSE, SUPERPAVE, MIX D, CLASS I, TYPE 2, 1 1/4"
2. EXISTING BITUMINOUS CONCRETE BINDER COURSE, SUPERPAVE, MIX D, CLASS I, TYPE 2, 1 1/4"
3. EXISTING 8" P.C.C. PAVEMENT
4. EXISTING 4" AGGREGATE SUB-BASE
5. EXISTING BITUMINOUS SHOULDERS 8"
6. EXISTING AGGREGATE SHOULDERS 8"
7. PROPOSED BITUMINOUS CONCRETE SURFACE COURSE, SUPERPAVE, MIX "D", N90, 1 1/4" AND VARIABLE
8. PROPOSED BITUMINOUS SHOULDERS SUPERPAVE 8" OR 10"

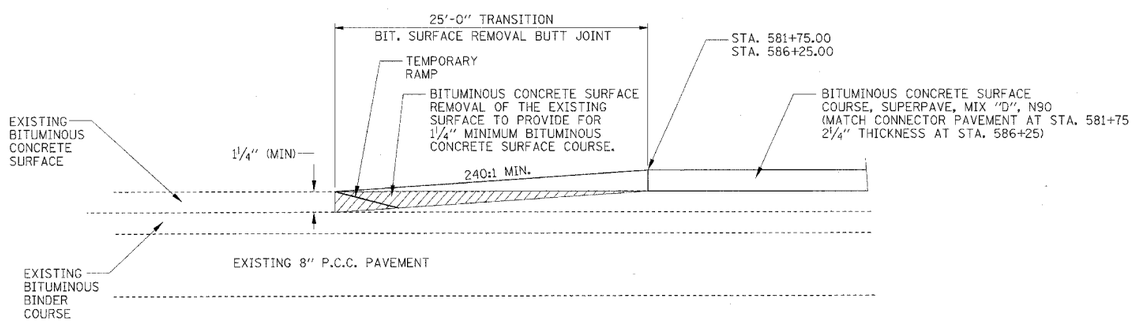

NOTE:
SAW CUT AND TRIMMING NEAR VERTICAL FACE INCIDENTAL TO BITUMINOUS SURFACE REMOVAL - BUTT JOINT

DETAIL FOR BUTT JOINT

MIXTURE REQUIREMENTS

LOCATION	BITUMINOUS SURFACE COURSE
MIXTURE USE(S):	BITUMINOUS CONCRETE SURFACE COURSE, SUPERPAVE, MIX "D", N90
AC/PG:	PG64-22
RAP % (MAX.):	10
DESIGN AIR VOIDS:	4.0%, 90 GYRATION SUPERPAVE DESIGN
MIXTURE COMPOSITION: (GRADATION MIXTURE)	IL-9.5 mm OR IL 12.5 mm
FRICTION AGGREGATE:	D SURFACE

LOCATION	TEMPORARY BITUMINOUS CONCRETE BASE COURSE WIDENING
MIXTURE USE(S):	BITUMINOUS CONCRETE BINDER COURSE, SUPERPAVE, N90, IL-19.0
AC/PG:	PG64-22
RAP % (MAX.):	10
DESIGN AIR VOIDS:	4.0%, 90 GYRATION SUPERPAVE DESIGN
MIXTURE COMPOSITION: (GRADATION MIXTURE)	IL-19.0
FRICTION AGGREGATE:	NONE

LOCATION	BITUMINOUS SHOULDERS
MIXTURE USE(S):	BITUMINOUS SHOULDERS, SUPERPAVE
AC/PG:	PG58-22
RAP % (MAX.):	50
DESIGN AIR VOIDS:	2.0%, 30 GYRATION SUPERPAVE DESIGN
MIXTURE COMPOSITION: (GRADATION MIXTURE)	BITUMINOUS AGGREGATE MIXTURE, SUPERPAVE
FRICTION AGGREGATE:	NONE

REVISIONS	
NAME	DATE

ILLINOIS DEPARTMENT OF TRANSPORTATION

TYPICAL SECTIONS

FAP ROUTE 322
SECTION (11-1VB)-1
UNION COUNTY

DRAWN BY: J. NIEDERHOFER

PLOT DATE: *DATE-TIME*

PLAN	SURVEYED	BY	DATE
NOTE BOOK NO.	PLOTTED		
	ALIGNMENT CHECKED		
	PT. OF BKY CHECKED		
	CADD FILE NAME		

PLOT DATE = 3/29/2006
FILE NAME = c:\projects\FAU0193\5 typical sections 6%-6873.dgn
PLOT SCALE = 10.0000 ' / IN.
USER NAME = duckersonlm