WA055

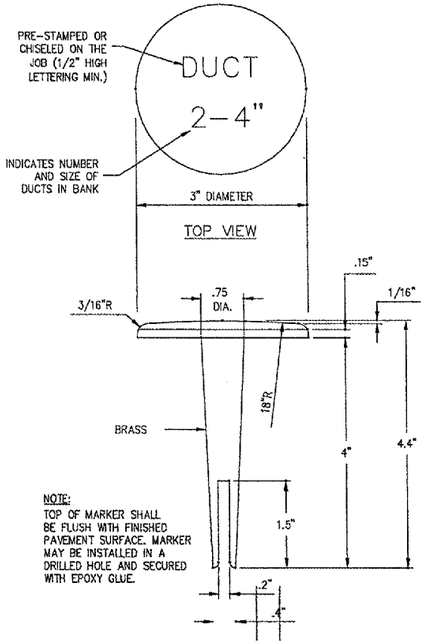

NOTE:
TOP OF MARKER SHALL BE FLUSH WITH FINISHED PAVEMENT SURFACE. MARKER MAY BE INSTALLED IN A DRILLED HOLE AND SECURED WITH EPOXY GLUE.

BITUMINOUS PAVEMENT MARKER

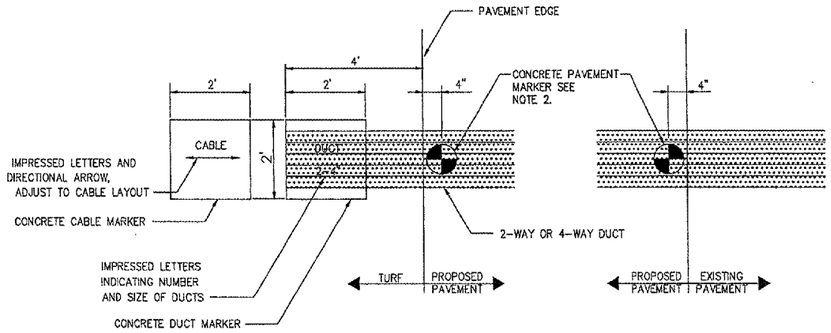

LOCATION PLAN

NOTES:

1. THE COSTS OF ALL TURF AND PAVEMENT DUCT MARKERS SHALL BE INCIDENTAL TO THE DUCT. THE COST OF ALL CABLE MARKERS SHALL BE INCIDENTAL TO THE CABLE.
2. BITUMINOUS PAVEMENT DUCT MARKER AND CONCRETE DUCT MARKER TO BE PROVIDED AT EACH END OF EACH DUCT AS SHOWN ON THE LOCATION PLAN. FOR CONCRETE PAVEMENT, THE LETTER "D" SHALL BE IMPRESSED IN THE PAVEMENT INSTEAD OF THE MARKER. THE LETTER SHALL BE FORMED AS DESCRIBED IN NOTE 4.
3. CABLE MARKERS SHALL BE PLACED AT CHANGES OF DIRECTION AND EVERY 200' ALONG CABLE RUNS.
4. LETTERS 4" HIGH, 3" WIDE WITH WIDTH OF STROKE ½" AND ¼" DEEP. ALL LETTERS, NUMBERS AND ARROWS TO BE IMPRESSED.

CONCRETE MARKER

LEGEND

- (S) EXISTING STAKE MOUNTED LIGHT
- ◯ EXISTING FIXTURE TO BE ADJUSTED
- PROPOSED STAKE MOUNTED LIGHT POSITION
- —E— PROPOSED LIGHTING CABLES, ITEM AR800915

NOTES:

1. FOR LIGHTING CABLE INFORMATION, SEE SPECIAL PROVISIONS
2. ALL EDGE LIGHTS AND HANDHOLES SHOWN FOR ADJUSTMENT ARE TO BE ADJUSTED PER SPECIAL PROVISIONS.
3. HANDHOLE ADJUSTMENTS ARE INCIDENTAL TO LIGHT ADJUSTMENTS.

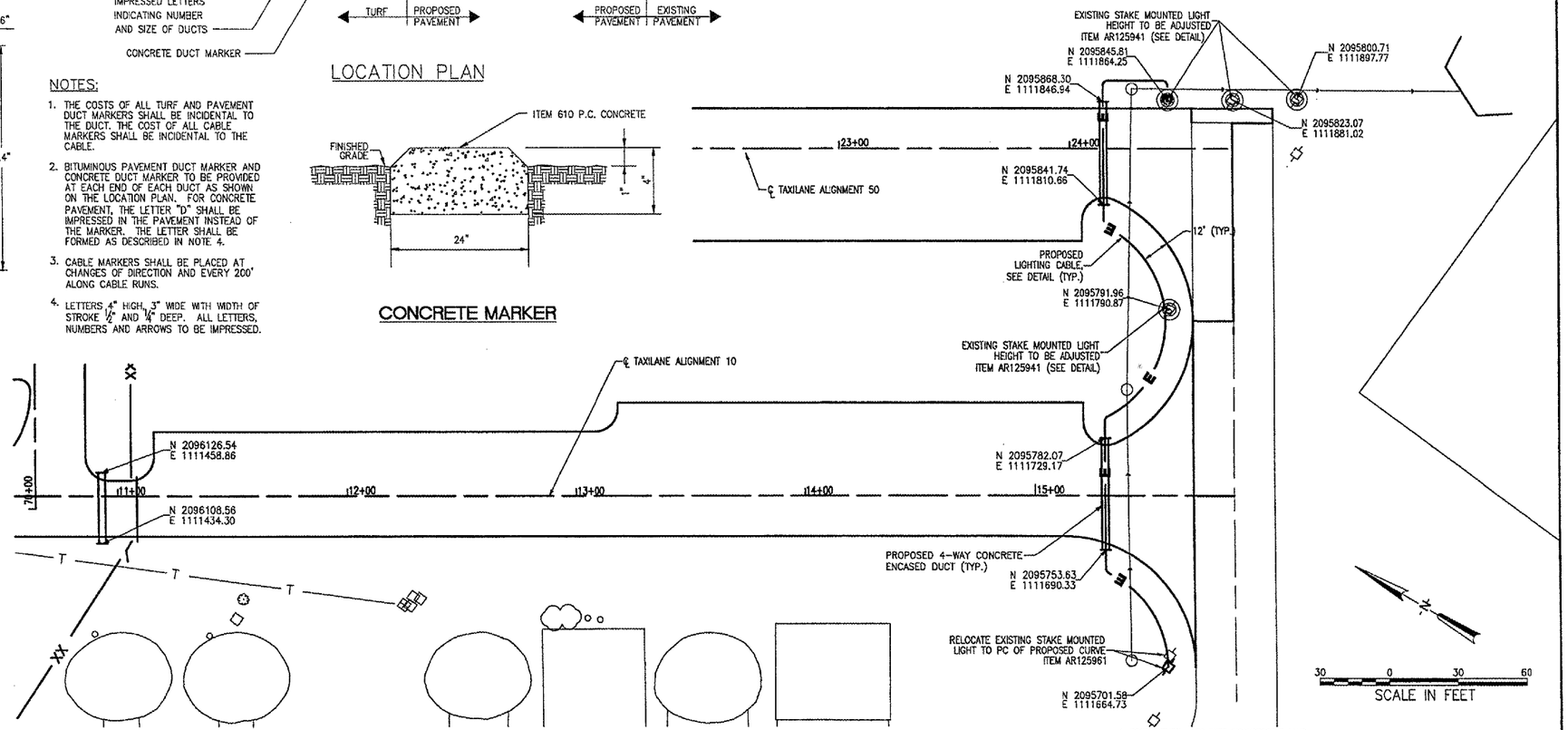

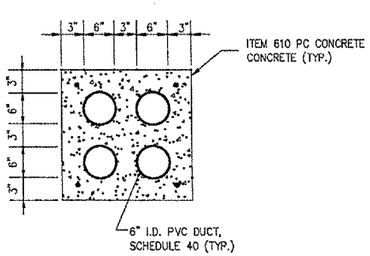

PRIMARY 4-WAY DUCT

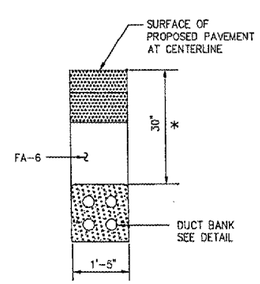

* DEPTH TO BE ADJUSTED SO THAT TOP OF DUCT ENCASEMENT TO BE 12" BELOW INVERT OF UNDERDRAIN TUBING

ENCASED DUCT CROSSING UNDER PAVEMENT

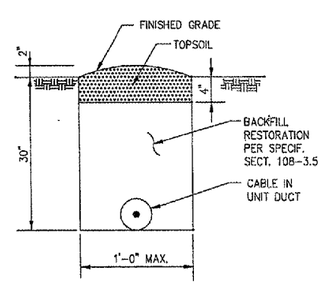

CABLE IN DUCT

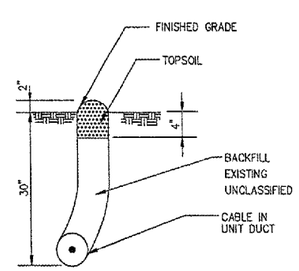

CABLE PLOWED

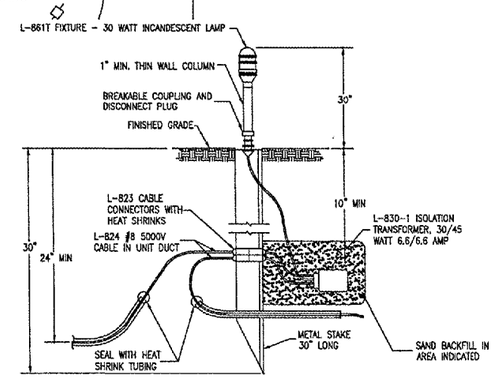

1. BREAKABLE COUPLING SHALL NOT BE OVER 1" ABOVE BASE PLATE.
2. TWO FEET OF SLACK CABLE IS TO BE LEFT AT EACH LIGHT. SLACK IS TO BE ON THE CABLE SIDE OF PRIMARY CONNECTORS AND SPLICES AND IS TO BE INCIDENTAL TO THE CABLE.
3. SEE SPECIAL PROVISIONS FOR ADDITIONAL REQUIREMENTS.

EXISTING STAKE - MOUNTED LIGHT L-861 AND L-861T

HANSON

HANSON PROFESSIONAL SERVICES INC.

815 Commerce Drive, Suite 200
Oak Brook, Illinois 60523
Telephone: 630.990.3800
Fax: 630.990.3801

Waukegan Regional Airport
Waukegan Regional Port District

3580 North McAree Road
Waukegan, Illinois 60087
Phone: 847.244.0055
Fax: 847.244.3813

REPAIR SELECTED PAVEMENT AREAS, REHABILITATE HANGAR TAXILANES AND SERVICE ROAD, AND CONSTRUCT NEW HANGAR PAVEMENTS

A.I.P. PROJ.: 3-17-0105-B30
IL. PROJ.: UGN-3449

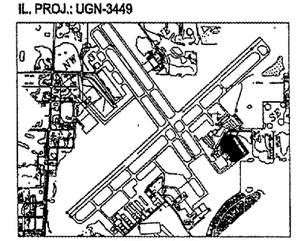

KEY MAP

No.	Drawing Issue Description	Date	By

Date

MAY 06, 2005

Sheet Title

ELECTRICAL PLAN AND DETAIL

831-04TXYD	
Project Number	
AAP	02/28/05
Layout By	Date
AAP	02/28/05
Designed By	Date
TMM	05/05/05
Reviewed By	Date
AAP	
Drawn By	

$USER$
$DATE$
$FILE$