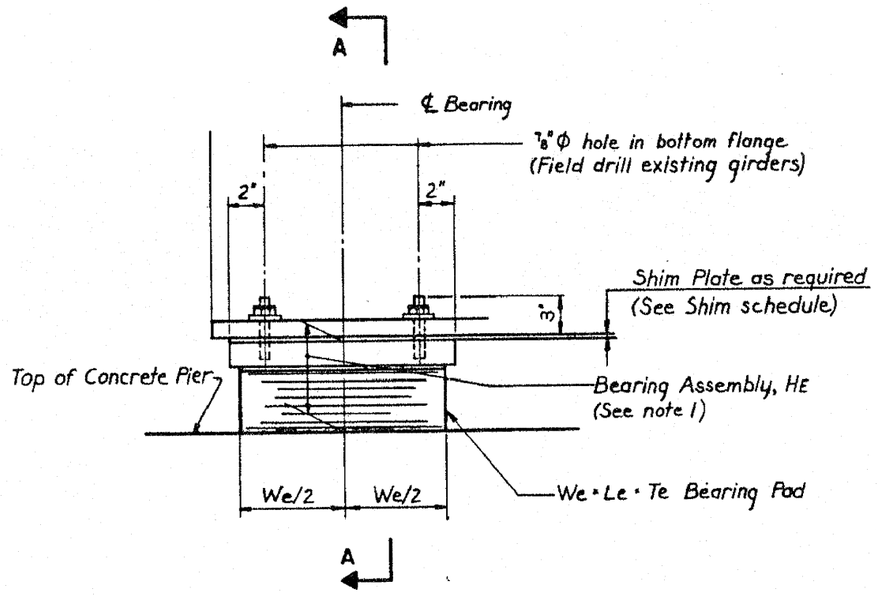

TYPICAL ELEVATION

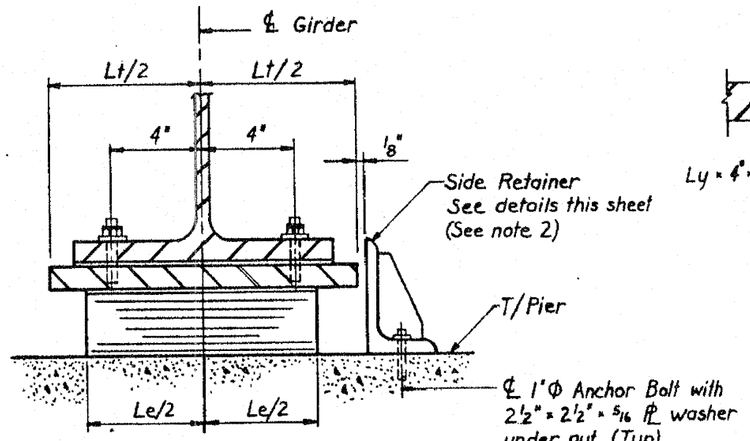

SECTION A-A

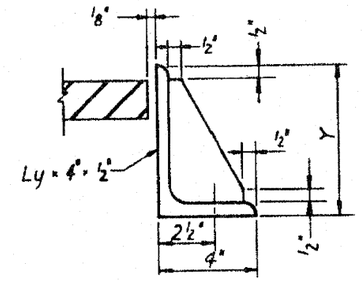

ELEVATION

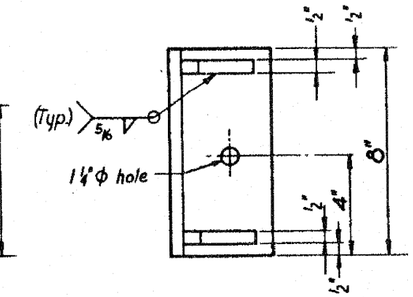

PLAN

SIDE RETAINER

TABLE OF DIMENSIONS - TYPE I
ELASTOMERIC EXPANSION BEARINGS

We	Le	Series	Tp	Np	Ts	Ns	Te
7	12	a	3/8	3	3/32	2	1 5/16
9	12	c	3/8	8	3/32	7	3 5/8

TYPE I ELASTOMERIC EXPANSION BEARING

Tp - denotes thickness of each elastomeric layer
Np - denotes number of elastomeric layers
Ts - denotes thickness of each steel plate
Ns - denotes number of steel plates

Notes:
1. Height of bearing assembly, HE, includes top plate and elastomeric pad and does not include shim plate.
2. Provide side retainer at inside face of exterior girder.

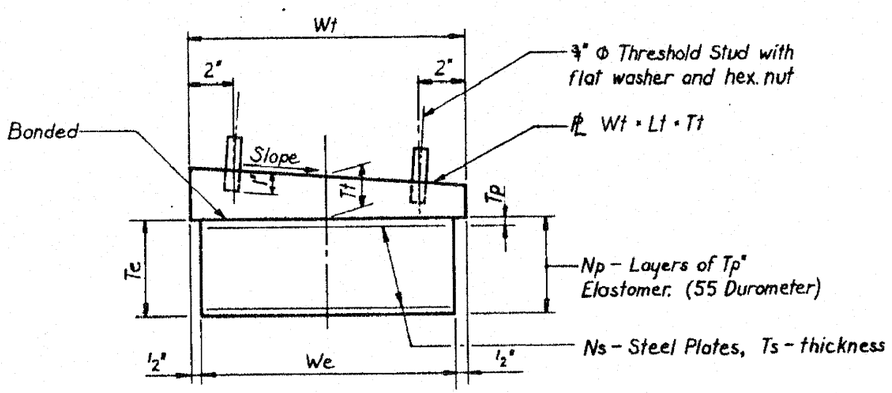

BEARING ASSEMBLY

TYPE I ELASTOMERIC EXPANSION BEARING SCHEDULE

STRUCTURE NO.	PIER LOCATION	GIRDER NO.	We	Le	SERIES	TOP PLATE Tt	Wt	Lt	SLOPE %	Y	He	NO. REQD
016-1115	3(N)	GN1—GN3	7	12	a	1 3/4	8	14	1.6	4	3 1/16	3
		GN4	7	12	a	1 3/4	8	14	1.6	4	3 1/16	1
	5(N)	16—20	9	12	c	2	10	14	1.0	6	5 5/8	5
		GN 20	9	12	c	2	10	14	1.0	6	5 5/8	1

FILE NAME =	USER NAME = rgoll	DESIGNED - AMR	REVISED -	STATE OF ILLINOIS DEPARTMENT OF TRANSPORTATION	TYPE I ELASTOMERIC EXPANSION BEARING DETAILS - LOCATION 2 STRUCTURE NO. 016-1115
		DRAWN - AMR	REVISED -		
	PLOT SCALE = 1.0000 ' / IN.	CHECKED - JMH	REVISED -		
	PLOT DATE = 3/28/2011	DATE - MARCH, 2011	REVISED -		SCALE: NTS SHEET NO. 33 OF 37 SHEETS STA. TO STA.

F.A.I. RTE.	SECTION	COUNTY	TOTAL SHEETS	SHEET NO.
94	2010-127-BP	COOK	160	79
		CONTRACT NO. 60N01		
		ILLINOIS FED. AID PROJECT		

$FILEL$