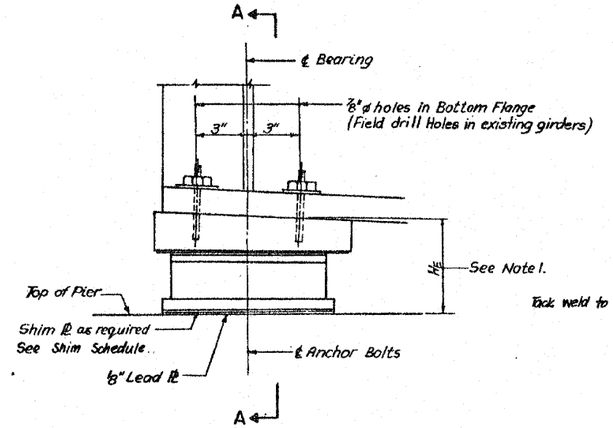

TYPICAL ELEVATION

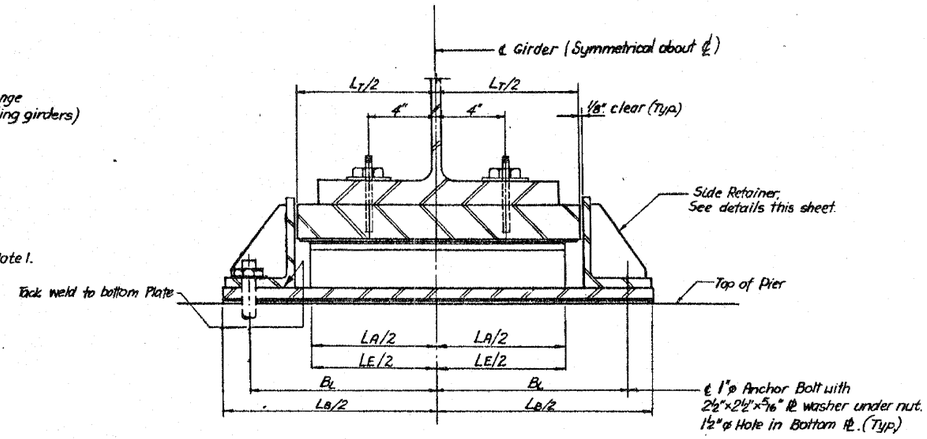

SECTION A–A

TYPE IV TFE ELASTOMERIC EXPANSION BEARING

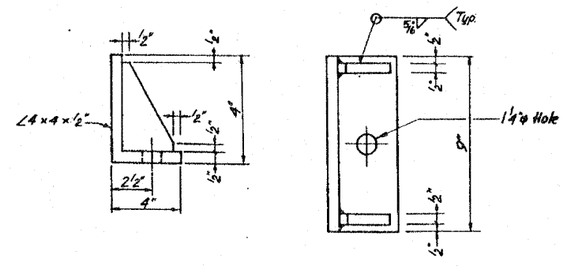

ELEVATION

PLAN

SIDE RETAINER DETAILS

TYPE IV ELASTOMERIC EXPANSION BEARING SCHEDULE

STRUCTURE NO.	PIER LOCATION	GIRDER NO.	NO. REQ'D	ELASTOMER T_E	ELASTOMER W_E	ELASTOMER L_E	TOP PLATE T_T	TOP PLATE W_T	TOP PLATE L_T	TOP PLATE % SLOPE	BOTTOM BEARING ASSEMBLY T_A	W_A	L_A	T_B	W_B	L_B	B_L		H_E	REMARKS
016-1140	+5(G)	G6+G10	5	1¾	9	12	1½	11¼	16		¼	9	12	⅞	10	24½	10⅝		4 11/16	R, G 1/16"

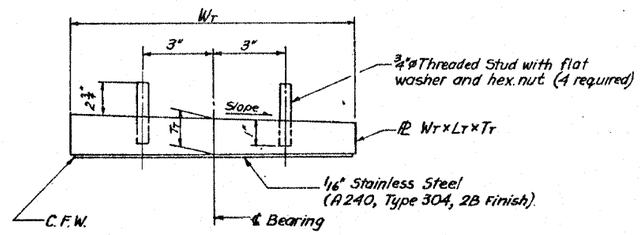

TOP BEARING ASSEMBLY

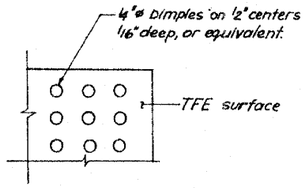

PLAN - TFE SURFACE

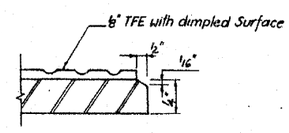

SECTION THRU TFE

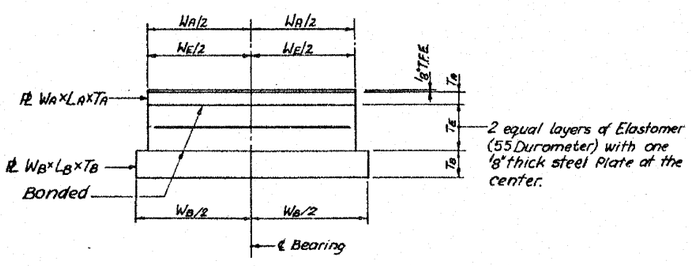

BOTTOM BEARING ASSEMBLY

Note:
The ⅛" TFE sheet shall be bonded directly to the top Steel Plate with a two-component, medium viscosity epoxy resin, conforming to the requirements of the Federal Specification MMM-A-134, Type I. The bond agent shall be applied on the full area of the contact surface.

Bonding of ⅛" TFE sheet during vulcanizing process will be permitted provided the process and method of adjusting assembly height is approved by the Engineer.

Remarks:
R – Replacement Bearings.
N – New Bearings for roadway widening.
G – Grind concrete pier cap under bearing by amount shown
⊛ – Pier 33(N) is from STRUCTURE No. 016-1059

Notes:

1. Height of Bearing Assembly, H_E, includes ⅛" lead Plate. (Does not include Shims if required)
2. For Bearings without Bolsters, the Side Retainer shall be tack welded as shown after the Girder and Bearing assembly have been set into their final position.

FILE NAME =	USER NAME = rgall	DESIGNED - AMR	REVISED -	STATE OF ILLINOIS DEPARTMENT OF TRANSPORTATION	TYPE IV ELASTOMERIC EXPANSION BEARING DETAILS – LOCATION 6 STRUCTURE NO. 016–1140	F.A.I. RTE. 94	SECTION 2010-127-BP	COUNTY COOK	TOTAL SHEETS 160	SHEET NO. 109
		DRAWN - AMR	REVISED -					CONTRACT NO. 60N01		
	PLOT SCALE = 1.0000 ' / IN.	CHECKED - JMH	REVISED -							
	PLOT DATE = 3/28/2011	DATE - MARCH, 2011	REVISED -		SCALE: NTS / SHEET NO. 9 OF 10 SHEETS / STA. / TO STA.		ILLINOIS FED. AID PROJECT			

$FILE$