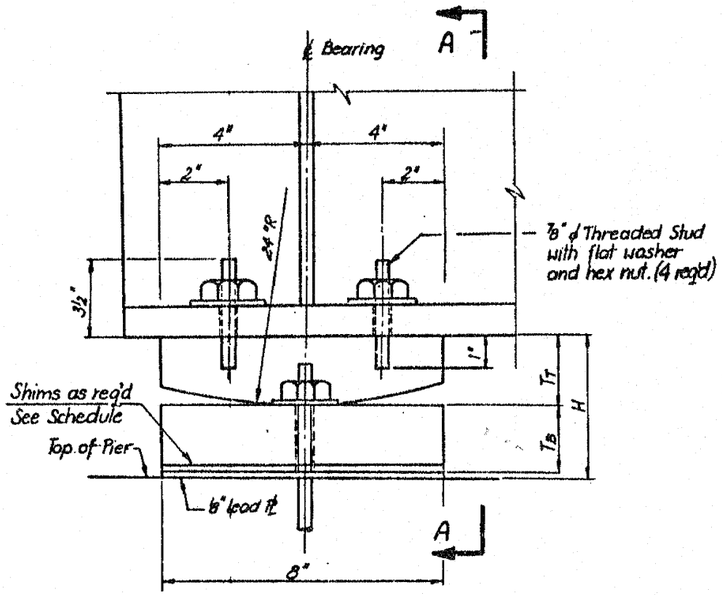

ELEVATION

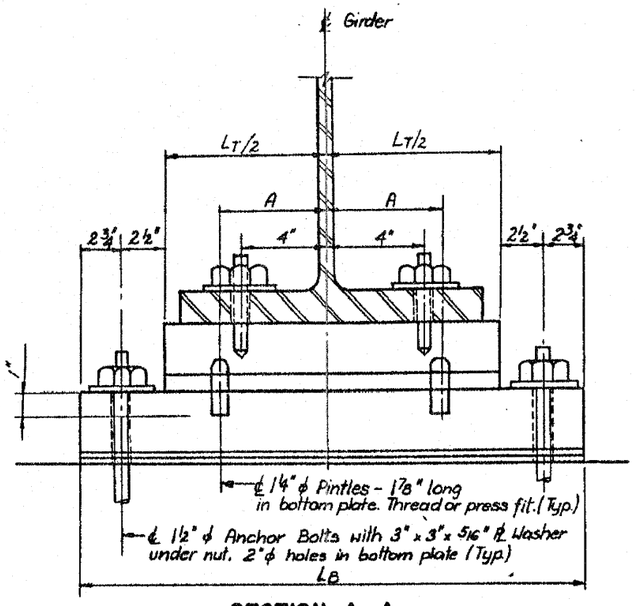

SECTION A-A

FIXED BEARING - TYPE F1

FIXED BEARING SCHEDULE

STRUCTURE NO.	PIER LOCATION	GIRDER NO.	B.I.G. TYPE	NO. REQ'D.	T_T"	L_T"	T_B"	L_B"	A"	H"
016-1140	11(S)	GB1	F1	1	2½	17	2	27½	5	4⅝
		GB2	F1	1	2½	13	2	23½	3	4⅝

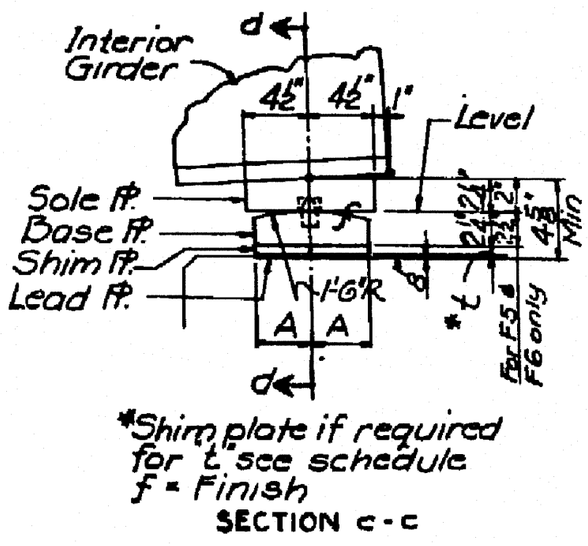

*Shim plate if required for "t" see schedule
f = Finish

SECTION c-c

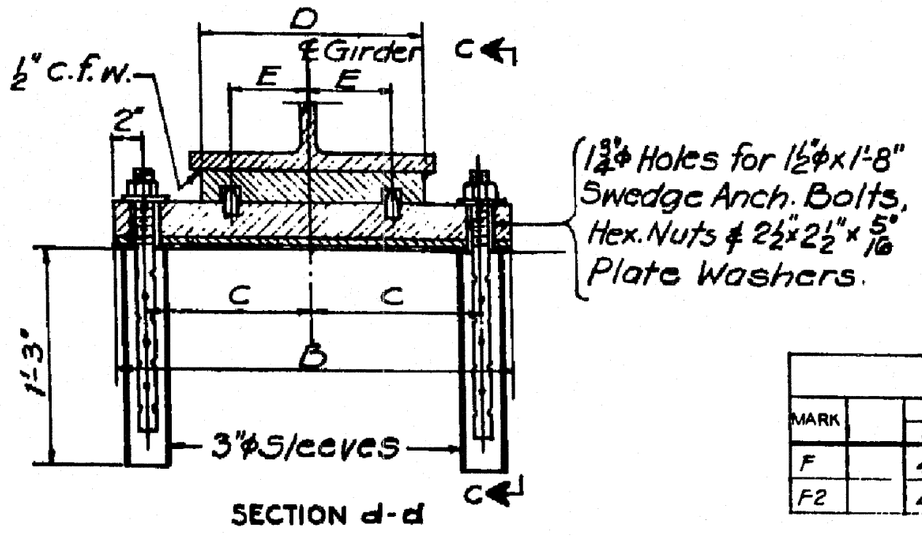

SECTION d-d

FIXED BEARING DETAILS

FIXED BEARING SCHEDULE								
MARK		DIMENSIONS						REMARKS
		A	B	C	D	E		
F		4"	2'-3"	11½"	1'-3"	5½"		Typical for 16" flange
F2		4"	1'-10½"	9¼"	11"	3½"		Typical for 12" flange

FILE NAME =	USER NAME = rgall	DESIGNED - AMR	REVISED -	STATE OF ILLINOIS DEPARTMENT OF TRANSPORTATION	FIXED BEARING DETAILS - LOCATION 6 STRUCTURE NO. 016-1140	F.A.I. RTE.	SECTION	COUNTY	TOTAL SHEETS	SHEET NO.
		DRAWN - AMR	REVISED -			94	2010-127-BP	COOK	160	110
	PLOT SCALE = 1.0000 ' / IN.	CHECKED - JMH	REVISED -					CONTRACT NO. 60N01		
	PLOT DATE = 3/28/2011	DATE - MARCH, 2011	REVISED -		SCALE: NTS / SHEET NO. 10 OF 10 SHEETS / STA. / TO STA.			ILLINOIS FED. AID PROJECT		

$FILEL$